OPERATOR'S MANUAL

Want to get going? Go to the Quickstart (p. 41) section. Want to see notes pertaining to this preliminary manual release? Go to Release Notes (p. 34).

CR800-Series Dataloggers

Preliminary for OS v.28: 4/20/15

Copyright © 2000 – 2015
Campbell Scientific, Inc.

Warranty

The CR800 Measurement and Control Datalogger is warranted for three (3) years subject to this limited warranty:

Limited Warranty: Products manufactured by CSI are warranted by CSI to be free from defects in materials and workmanship under normal use and service for twelve months from the date of shipment unless otherwise specified in the corresponding product manual. (Product manuals are available for review online at www.campbellsci.com.) Products not manufactured by CSI, but that are resold by CSI, are warranted only to the limits extended by the original manufacturer. Batteries, fine-wire thermocouples, desiccant, and other consumables have no warranty. CSI's obligation under this warranty is limited to repairing or replacing (at CSI's option) defective Products, which shall be the sole and exclusive remedy under this warranty. The Customer assumes all costs of removing, reinstalling, and shipping defective Products to CSI. CSI will return such Products by surface carrier prepaid within the continental United States of America. To all other locations, CSI will return such Products best way CIP (port of entry) per Incoterms ® 2010. This warranty shall not apply to any Products which have been subjected to modification, misuse, neglect, improper service, accidents of nature, or shipping damage. This warranty is in lieu of all other warranties, expressed or implied. The warranty for installation services performed by CSI such as programming to customer specifications, electrical connections to Products manufactured by CSI, and Product specific training, is part of CSI's product warranty. CSI EXPRESSLY DISCLAIMS AND EXCLUDES ANY IMPLIED WARRANTIES OF MERCHANTABILITY OR FITNESS FOR A PARTICULAR PURPOSE. CSI hereby disclaims, to the fullest extent allowed by applicable law, any and all warranties and conditions with respect to the Products, whether express, implied or statutory, other than those expressly provided herein.

Assistance

Products may not be returned without prior authorization. The following contact information is for US and International customers residing in countries served by Campbell Scientific, Inc. directly. Affiliate companies handle repairs for customers within their territories. Please visit *www.campbellsci.com* to determine which Campbell Scientific company serves your country.

To obtain a Returned Materials Authorization (RMA), contact CAMPBELL SCIENTIFIC, INC., phone (435) 227-2342. After an application engineer determines the nature of the problem, an RMA number will be issued. Please write this number clearly on the outside of the shipping container. Campbell Scientific's shipping address is:

CAMPBELL SCIENTIFIC, INC.
RMA#_____
815 West 1800 North
Logan, Utah 84321-1784

For all returns, the customer must fill out a "Statement of Product Cleanliness and Decontamination" form and comply with the requirements specified in it. The form is available from our web site at *www.campbellsci.com/repair*. A completed form must be either emailed to *repair@campbellsci.com* or faxed to 435-227-9579. Campbell Scientific is unable to process any returns until we receive this form. If the form is not received within three days of product receipt or is incomplete, the product will be returned to the customer at the customer's expense. Campbell Scientific reserves the right to refuse service on products that were exposed to contaminants that may cause health or safety concerns for our employees.

Precautions

DANGER — MANY HAZARDS ARE ASSOCIATED WITH INSTALLING, USING, MAINTAINING, AND WORKING ON OR AROUND TRIPODS, TOWERS, AND ANY ATTACHMENTS TO TRIPODS AND TOWERS SUCH AS SENSORS, CROSSARMS, ENCLOSURES, ANTENNAS, ETC. FAILURE TO PROPERLY AND COMPLETELY ASSEMBLE, INSTALL, OPERATE, USE, AND MAINTAIN TRIPODS, TOWERS, AND ATTACHMENTS, AND FAILURE TO HEED WARNINGS, INCREASES THE RISK OF DEATH, ACCIDENT, SERIOUS INJURY, PROPERTY DAMAGE, AND PRODUCT FAILURE. TAKE ALL REASONABLE PRECAUTIONS TO AVOID THESE HAZARDS. CHECK WITH YOUR ORGANIZATION'S SAFETY COORDINATOR (OR POLICY) FOR PROCEDURES AND REQUIRED PROTECTIVE EQUIPMENT PRIOR TO PERFORMING ANY WORK.

Use tripods, towers, and attachments to tripods and towers only for purposes for which they are designed. Do not exceed design limits. Be familiar and comply with all instructions provided in product manuals. Manuals are available at www.campbellsci.com or by telephoning 435-227-9000 (USA). You are responsible for conformance with governing codes and regulations, including safety regulations, and the integrity and location of structures or land to which towers, tripods, and any attachments are attached. Installation sites should be evaluated and approved by a qualified engineer. If questions or concerns arise regarding installation, use, or maintenance of tripods, towers, attachments, or electrical connections, consult with a licensed and qualified engineer or electrician.

General

- Prior to performing site or installation work, obtain required approvals and permits. Comply with all governing structure-height regulations, such as those of the FAA in the USA.
- Use only qualified personnel for installation, use, and maintenance of tripods and towers, and any attachments to tripods and towers. The use of licensed and qualified contractors is highly recommended.
- Read all applicable instructions carefully and understand procedures thoroughly before beginning work.
- Wear a hardhat and eye protection, and take other appropriate safety precautions while working on or around tripods and towers.
- Do not climb tripods or towers at any time, and prohibit climbing by other persons. Take reasonable precautions to secure tripod and tower sites from trespassers.
- Use only manufacturer recommended parts, materials, and tools.

Utility and Electrical

- You can be killed or sustain serious bodily injury if the tripod, tower, or attachments you are installing, constructing, using, or maintaining, or a tool, stake, or anchor, come in contact with overhead or underground utility lines.
- Maintain a distance of at least one-and-one-half times structure height, or 20 feet, or the distance required by applicable law, whichever is greater, between overhead utility lines and the structure (tripod, tower, attachments, or tools).

- Prior to performing site or installation work, inform all utility companies and have all underground utilities marked.
- Comply with all electrical codes. Electrical equipment and related grounding devices should be installed by a licensed and qualified electrician.

Elevated Work and Weather

- Exercise extreme caution when performing elevated work.
- Use appropriate equipment and safety practices.
- During installation and maintenance, keep tower and tripod sites clear of un-trained or non-essential personnel. Take precautions to prevent elevated tools and objects from dropping.
- Do not perform any work in inclement weather, including wind, rain, snow, lightning, etc.

Maintenance

- Periodically (at least yearly) check for wear and damage, including corrosion, stress cracks, frayed cables, loose cable clamps, cable tightness, etc. and take necessary corrective actions.
- Periodically (at least yearly) check electrical ground connections.

WHILE EVERY ATTEMPT IS MADE TO EMBODY THE HIGHEST DEGREE OF SAFETY IN ALL CAMPBELL SCIENTIFIC PRODUCTS, THE CUSTOMER ASSUMES ALL RISK FROM ANY INJURY RESULTING FROM IMPROPER INSTALLATION, USE, OR MAINTENANCE OF TRIPODS, TOWERS, OR ATTACHMENTS TO TRIPODS AND TOWERS SUCH AS SENSORS, CROSSARMS, ENCLOSURES, ANTENNAS, ETC.

Table of Contents

1. Introduction 33

1.1 HELLO 33
1.2 Typography 33
1.3 Capturing CRBasic Code 34
1.4 Release Notes 34

2. Cautionary Statements 37

3. Initial Inspection 39

4. System Quickstart 41

4.1 Data-Acquisition Systems — Quickstart 41
4.2 Sensors — Quickstart 42
4.3 Datalogger — Quickstart 43
4.3.1.1 Wiring Panel — Quickstart 43
4.4 Power Supplies — Quickstart 44
4.4.1 Internal Battery — Quickstart 45
4.5 Data Retrieval and Telecommunications — Quickstart 45
4.6 Datalogger Support Software — Quickstart 46
4.7 Tutorial: Measuring a Thermocouple 46
4.7.1 What You Will Need 46
4.7.2 Hardware Setup 47
4.7.2.1 External Power Supply 47
4.7.3 PC200W Software Setup 48
4.7.4 Write CRBasic Program with Short Cut 50
4.7.4.1 Procedure: (Short Cut Steps 1 to 5) 50
4.7.4.2 Procedure: (Short Cut Steps 6 to 7) 51
4.7.4.3 Procedure: (Short Cut Step 8) 52
4.7.4.4 Procedure: (Short Cut Steps 9 to 12) 53
4.7.4.5 Procedure: (Short Cut Steps 13 to 14) 54
4.7.5 Send Program and Collect Data 55
4.7.5.1 Procedure: (PC200W Step 1) 55
4.7.5.2 Procedure: (PC200W Steps 2 to 4) 55
4.7.5.3 Procedure: (PC200W Step 5) 56
4.7.5.4 Procedure: (PC200W Step 6) 57
4.7.5.5 Procedure: (PC200W Steps 7 to 10) 58
4.7.5.6 Procedure: (PC200W Steps 11 to 12) 59
4.7.5.7 Procedure: (PC200W Steps 13 to 14) 59

5. System Overview 61

5.1 Measurements — Overview 62
5.1.1 Time Keeping — Overview 63
5.1.2 Analog Measurements — Overview 63
5.1.2.1 Voltage Measurements — Overview 63
5.1.2.1.1 Single-Ended Measurements — Overview 65
5.1.2.1.2 Differential Measurements — Overview 66
5.1.2.2 Current Measurements — Overview 66
5.1.2.3 Resistance Measurements — Overview 66

5.1.2.3.1 Voltage Excitation 67
5.1.2.4 Strain Measurements — Overview 68
5.1.3 Pulse Measurements — Overview 68
5.1.3.1 Pulses Measured 69
5.1.3.2 Pulse-Input Channels 69
5.1.3.3 Pulse Sensor Wiring 70
5.1.4 Period Averaging — Overview 70
5.1.5 Vibrating-Wire Measurements — Overview 71
5.1.6 Reading Smart Sensors — Overview 72
5.1.6.1 SDI-12 Sensor Support — Overview 72
5.1.6.2 RS-232 — Overview 72
5.1.7 Field Calibration — Overview 73
5.1.8 Cabling Effects — Overview 73
5.1.9 Synchronizing Measurements — Overview 74
5.2 PLC Control — Overview 74
5.3 Datalogger — Overview 75
5.3.1 Time Keeping — Overview 75
5.3.2 Wiring Panel — Overview 75
5.3.2.1 Switched Voltage Output — Overview 78
5.3.2.2 Voltage Excitation — Overview 79
5.3.2.3 Grounding Terminals 79
5.3.2.4 Power Terminals 80
5.3.2.4.1 Power In 80
5.3.2.4.2 Power Out Terminals 80
5.3.2.5 Communication Ports 81
5.3.2.5.1 CS I/O Port 81
5.3.2.5.2 RS-232 Ports 81
5.3.2.5.3 SDI-12 Ports 82
5.3.2.5.4 SDM Port 82
5.3.2.5.5 CPI Port 82
5.3.2.5.6 Ethernet Port 82
5.3.3 Keyboard Display — Overview 82
5.3.3.1 Integrated Keyboard Display 83
5.3.3.2 Character Set 83
5.3.3.3 Custom Menus — Overview 83
5.3.4 Measurement and Control Peripherals — Overview 84
5.3.5 Power Supplies — Overview 85
5.3.6 CR800 Configuration — Overview 85
5.3.7 CRBasic Programming — Overview 86
5.3.8 Memory — Overview 86
5.3.9 Data Retrieval and Telecommunications — Overview 87
5.3.9.1 PakBus® Communications — Overview 88
5.3.9.2 Telecommunications 88
5.3.9.3 Mass-Storage Device 88
5.3.9.4 Data-File Formats in CR800 Memory 89
5.3.9.5 Data Format on Computer 89
5.3.10 Alternate Telecommunications — Overview 89
5.3.10.1 Modbus 89
5.3.10.2 DNP3 — Overview 90
5.3.10.3 TCP/IP — Overview 90
5.3.11 Security — Overview 90
5.3.12 Maintenance — Overview 92

5.3.12.1 Protection from Moisture — Overview 92
5.3.12.2 Protection from Voltage Transients 92
5.3.12.3 Factory Calibration 92
5.3.12.4 Internal Battery — Details 93
5.4 Datalogger Support Software — Overview 93

6. Specifications 95

7. Installation.....97

7.1 Protection from Moisture — Details 97
7.2 Temperature Range 97
7.3 Enclosures 97
7.4 Power Supplies — Details 98
7.4.1 CR800 Power Requirement 99
7.4.2 Calculating Power Consumption 99
7.4.3 Power Sources 99
7.4.3.1 Vehicle Power Connections 100
7.4.4 Uninterruptable Power Supply (UPS)..... 100
7.4.5 External Power Supply Installation 100
7.5 Switched Voltage Output — Details 101
7.5.1 Switched-Voltage Excitation 102
7.5.2 Continuous Regulated (5V Terminal)..... 102
7.5.3 Continuous Unregulated Voltage (12V Terminal) 103
7.5.4 Switched Unregulated Voltage (SW12 Terminal) 103
7.6 Grounding 103
7.6.1 ESD Protection 103
7.6.1.1 Lightning Protection 105
7.6.2 Single-Ended Measurement Reference..... 106
7.6.3 Ground-Potential Differences..... 107
7.6.3.1 Soil Temperature Thermocouple..... 107
7.6.3.2 External Signal Conditioner..... 107
7.6.4 Ground Looping in Ionic Measurements 107
7.7 CR800 Configuration — Details..... 109
7.7.1 Configuration Tools..... 109
7.7.1.1 Configuration with DevConfig 109
7.7.1.2 Network Planner 110
7.7.1.2.1 Overview 111
7.7.1.2.2 Basics 112
7.7.1.3 Configuration with Status/Settings/DTI..... 112
7.7.1.4 Configuration with Executable CPU: Files 113
7.7.1.4.1 Default.cr8 File..... 114
7.7.1.4.2 Executable File Run Priorities 114
7.7.2 CR800 Configuration — Details 115
7.7.2.1 Updating the Operating System (OS)..... 115
7.7.2.1.1 OS Update with DevConfig Send OS Tab..... 116
7.7.2.1.2 OS Update with DevConfig..... 117
7.7.2.1.3 OS Update with DevConfig..... 117
7.7.2.1.4 OS Update with DevConfig..... 119
7.7.2.2 Restoring Factory Defaults 120
7.7.2.3 Saving and Restoring Configurations 120
7.8 CRBasic Programming — Details 120
7.8.1 Program Structure..... 121

7.8.2 Writing and Editing Programs 123
7.8.2.1 Short Cut Programming Wizard 123
7.8.2.2 CRBasic Editor 123
7.8.2.2.1 Inserting Comments into Program 124
7.8.2.2.2 Conserving Program Memory 124
7.8.3 Sending CRBasic Programs 124
7.8.3.1 Preserving Data at Program Send 125
7.8.4 Programming Syntax 126
7.8.4.1 Program Statements 126
7.8.4.1.1 Multiple Statements on One Line 126
7.8.4.1.2 One Statement on Multiple Lines 126
7.8.4.2 Single-Statement Declarations 127
7.8.4.3 Declaring Variables 127
7.8.4.3.1 Declaring Data Types 128
7.8.4.3.2 Dimensioning Numeric Variables 132
7.8.4.3.3 Dimensioning String Variables 132
7.8.4.3.4 Declaring Flag Variables 133
7.8.4.4 Declaring Arrays 133
7.8.4.5 Declaring Local and Global Variables 134
7.8.4.6 Initializing Variables 135
7.8.4.7 Declaring Constants 135
7.8.4.7.1 Predefined Constants 136
7.8.4.8 Declaring Aliases and Units 136
7.8.4.9 Numerical Formats 137
7.8.4.10 Multi-Statement Declarations 138
7.8.4.10.1 Declaring Data Tables 138
7.8.4.10.2 Declaring Subroutines 145
7.8.4.10.3 'Include' File 145
7.8.4.10.4 Declaring Subroutines 149
7.8.4.10.5 Declaring Incidental Sequences 149
7.8.4.11 Execution and Task Priority 149
7.8.4.11.1 Pipeline Mode 150
7.8.4.11.2 Sequential Mode 151
7.8.4.12 Execution Timing 152
7.8.4.12.1 Scan() / NextScan 153
7.8.4.12.2 SlowSequence / EndSequence 153
7.8.4.12.3 SubScan() / NextSubScan 154
7.8.4.12.4 Scan Priorities in Sequential Mode 154
7.8.4.13 Programming Instructions 156
7.8.4.13.1 Measurement and Data-Storage Processing 156
7.8.4.13.2 Argument Types 157
7.8.4.13.3 Names in Arguments 157
7.8.4.14 Expressions in Arguments 158
7.8.4.15 Programming Expression Types 158
7.8.4.15.1 Floating-Point Arithmetic 159
7.8.4.15.2 Mathematical Operations 159
7.8.4.15.3 Expressions with Numeric Data Types 160
7.8.4.15.4 Logical Expressions 162
7.8.4.15.5 String Expressions 164
7.8.4.16 Programming Access to Data Tables 165
7.8.4.17 Programming to Use Signatures 167
7.9 Programming Resource Library 167

7.9.1 Advanced Programming Techniques 167
7.9.1.1 Capturing Events 167
7.9.1.2 Conditional Output 168
7.9.1.3 Groundwater Pump Test 169
7.9.1.4 Miscellaneous Features 172
7.9.1.5 PulseCountReset Instruction 175
7.9.1.6 Scaling Array 175
7.9.1.7 Signatures: Example Programs 176
7.9.1.7.1 Text Signature 176
7.9.1.7.2 Binary Runtime Signature 176
7.9.1.7.3 Executable Code Signatures 176
7.9.1.8 Use of Multiple Scans 177
7.9.2 Compiling: Conditional Code 178
7.9.3 Displaying Data: Custom Menus — Details 180
7.9.4 Data Input: Loading Large Data Sets 186
7.9.5 Data Input: Array-Assigned Expression 187
7.9.6 Data Output: Calculating Running Average 190
7.9.7 Data Output: Triggers and Omitting Samples 193
7.9.8 Data Output: Two Intervals in One Data Table 195
7.9.9 Data Output: Using Data Type Bool8 196
7.9.10 Data Output: Using Data Type NSEC 200
7.9.10.1 NSEC Options 200
7.9.11 Field Calibration — Details 203
7.9.11.1 Field Calibration CAL Files 204
7.9.11.2 Field Calibration Programming 204
7.9.11.3 Field Calibration Wizard Overview 205
7.9.11.4 Field Calibration Numeric Monitor Procedures 205
7.9.11.4.1 One-Point Calibrations (Zero or Offset) 206
7.9.11.4.2 Two-Point Calibrations (gain and offset) 206
7.9.11.4.3 Zero Basis Point Calibration 207
7.9.11.5 Field Calibration Examples 207
7.9.11.5.1 FieldCal() Zero or Tare (Opt 0) Example 207
7.9.11.5.2 FieldCal() Offset (Opt 1) Example 209
7.9.11.5.3 FieldCal() Slope and Offset (Opt 2) Example 211
7.9.11.5.4 FieldCal() Slope (Opt 3) Example 214
7.9.11.5.5 FieldCal() Zero Basis (Opt 4) Example -- 8 10 30 216
7.9.11.6 Field Calibration Strain Examples 216
7.9.11.6.1 Field Calibration Strain Examples 217
7.9.11.6.2 Field Calibration Strain Examples 217
7.9.11.6.3 FieldCalStrain() Quarter-Bridge Shunt Example 219
7.9.11.6.4 FieldCalStrain() Quarter-Bridge Zero 220
7.9.12 Measurement: Excite, Delay, Measure 221
7.9.13 Measurement: Faster Analog Rates 221
7.9.13.1 Measurements from 1 to 100 Hz 223
7.9.13.2 Measurement Rate: 101 to 600 Hz 224
7.9.13.2.1 Measurements from 101 to 600 Hz 2 224
7.9.13.3 Measurement Rate: 601 to 2000 Hz 225
7.9.14 Measurement: PRT 227
7.9.14.1 Measuring PT100s (100 Ω PRTs) 227
7.9.14.1.1 Self-Heating and Resolution 227
7.9.14.1.2 PRT Calculation Standards 227
7.9.14.2 PT100 in Four-Wire Half-Bridge 231

7.9.14.2.1 Calculating the Excitation Voltage 231
7.9.14.2.2 Calculating the BrHalf4W() Multiplier 232
7.9.14.2.3 Choosing Rf 232
7.9.14.3 PT100 in Three-Wire Half Bridge 233
7.9.14.4 PT100 in Four-Wire Full-Bridge 235
7.9.15 PLC Control — Details 237
7.9.16 Serial I/O: Capturing Serial Data 238
7.9.16.1 Introduction 238
7.9.16.2 I/O Ports 239
7.9.16.3 Protocols 240
7.9.16.4 Glossary of Serial I/O Terms 240
7.9.16.5 Serial I/O CRBasic Programming 242
7.9.16.5.1 Serial I/O Programming Basics 242
7.9.16.5.2 Serial I/O Input Programming Basics 244
7.9.16.5.3 Serial I/O Output Programming Basics 245
7.9.16.5.4 Serial I/O Translating Bytes 245
7.9.16.5.5 Serial I/O Memory Considerations 246
7.9.16.5.6 Demonstration Program 247
7.9.16.6 Serial I/O Application Testing 248
7.9.16.6.1 Configure HyperTerminal 248
7.9.16.6.2 Create Send-Text File 251
7.9.16.6.3 Create Text-Capture File 251
7.9.16.6.4 Serial I/O Example II 251
7.9.16.7 Serial I/O Q & A 257
7.9.17 Serial I/O: SDI-12 Sensor Support — Programming Resource 259
7.9.17.1 SDI-12 Transparent Mode 260
7.9.17.1.1 SDI-12 Transparent Mode Commands 261
7.9.17.2 SDI-12 Recorder Mode 265
7.9.17.3 SDI-12 Sensor Mode 272
7.9.17.4 SDI-12 Power Considerations 274
7.9.18 String Operations 275
7.9.18.1 String Operators 275
7.9.18.2 String Concatenation 276
7.9.18.3 String NULL Character 278
7.9.18.4 Inserting String Characters 279
7.9.18.5 Extracting String Characters 279
7.9.18.6 String Use of ASCII / ANSII Codes 279
7.9.18.7 Formatting Strings 280
7.9.18.8 Formatting String Hexadecimal Variables 280
7.9.19 Subroutines 281
7.9.20 TCP/IP — Details 282
7.9.20.1 PakBus Over TCP/IP and Callback 283
7.9.20.2 Default HTTP Web Server 283
7.9.20.3 Custom HTTP Web Server 284
7.9.20.4 FTP Server 287
7.9.20.5 FTP Client 287
7.9.20.6 Telnet 287
7.9.20.7 SNMP 287
7.9.20.8 Ping (IP) 288
7.9.20.9 Micro-Serial Server 288
7.9.20.10 Modbus TCP/IP 288

7.9.20.11 DHCP ... 288
7.9.20.12 DNS ... 288
7.9.20.13 SMTP ... 288
7.9.21 Wind Vector ... 288
7.9.21.1 OutputOpt Parameters ... 289
7.9.21.2 Wind Vector Processing ... 289
7.9.21.2.1 Measured Raw Data ... 290
7.9.21.2.2 Calculations ... 291

8. Operation ... 295

8.1 Measurements — Details ... 295
8.1.1 Time Keeping — Details ... 295
8.1.1.1 Time Stamps ... 295
8.1.2 Analog Measurements — Details ... 297
8.1.2.1 Voltage Measurements — Details ... 297
8.1.2.1.1 Voltage Measurement Mechanics ... 297
8.1.2.1.2 Voltage Measurement Limitations ... 300
8.1.2.1.3 Voltage Measurement Quality ... 303
8.1.2.2 Thermocouple Measurements —- Details ... 319
8.1.2.3 Current Measurements — Details ... 319
8.1.2.4 Resistance Measurements — Details ... 319
8.1.2.4.1 Ac Excitation ... 323
8.1.2.4.2 Resistance Measurements — Accuracy ... 323
8.1.2.5 Strain Measurements — Details ... 324
8.1.2.6 Auto-Calibration — Details ... 326
8.1.2.6.1 Auto Calibration Process ... 326
8.1.3 Pulse Measurements — Details ... 331
8.1.3.1 Pulse Measurement Terminals ... 333
8.1.3.2 Low-Level Ac Measurements — Details ... 334
8.1.3.3 High-Frequency Measurements ... 334
8.1.3.3.1 Frequency Resolution ... 335
8.1.3.3.2 Frequency Measurement Q & A ... 336
8.1.3.4 Switch-Closure and Open-Collector Measurements ... 336
8.1.3.5 Edge Timing ... 337
8.1.3.6 Edge Counting ... 337
8.1.3.7 Pulse Measurement Tips ... 338
8.1.3.7.1 TimerIO() NAN Conditions ... 340
8.1.3.7.2 Input Filters and Signal Attenuation ... 340
8.1.4 Period Averaging — Details ... 341
8.1.5 Vibrating-Wire Measurements — Details ... 343
8.1.5.1 Time-Domain Measurement ... 343
8.1.6 Reading Smart Sensors — Details ... 344
8.1.6.1 RS-232 and TTL ... 344
8.1.6.2 SDI-12 Sensor Support — Details ... 344
8.1.7 Field Calibration — Overview ... 345
8.1.8 Cabling Effects ... 345
8.1.8.1 Analog-Sensor Cables ... 345
8.1.8.2 Pulse Sensors ... 345
8.1.8.3 RS-232 Sensors ... 346
8.1.8.4 SDI-12 Sensors ... 346
8.1.9 Synchronizing Measurements ... 346
8.2 Measurement and Control Peripherals — Details ... 348

8.2.1 Analog-Input Modules ... 348
8.2.2 Pulse-Input Modules ... 348
8.2.2.1 Low-Level Ac Input Modules — Overview ... 348
8.2.3 Serial I/O Modules — Details ... 348
8.2.4 Terminal-Input Modules ... 349
8.2.5 Vibrating-Wire Modules ... 349
8.2.6 Analog-Output Modules ... 349
8.2.7 PLC Control Modules — Overview ... 349
8.2.7.1 Terminals Configured for Control ... 349
8.2.7.2 Relays and Relay Drivers ... 350
8.2.7.3 Component-Built Relays ... 350
8.3 Memory ... 351
8.3.1 Storage Media ... 351
8.3.1.1 Memory Drives — On-Board ... 355
8.3.1.1.1 Data Table SRAM ... 355
8.3.1.1.2 CPU: Drive ... 355
8.3.1.1.3 USR: Drive ... 355
8.3.1.1.4 USB: Drive ... 356
8.3.2 Data-File Formats ... 357
8.3.3 Resetting the CR800 ... 360
8.3.3.1 Full Memory Reset ... 360
8.3.3.2 Program Send Reset ... 361
8.3.3.3 Manual Data-Table Reset ... 361
8.3.3.4 Formatting Drives ... 361
8.3.4 File Management ... 361
8.3.4.1 File Attributes ... 363
8.3.4.2 Files Manager ... 363
8.3.4.3 Data Preservation ... 364
8.3.4.4 Powerup.ini File — Details ... 365
8.3.4.4.1 Creating and Editing Powerup.ini ... 366
8.3.4.5 File Management Q & A ... 368
8.3.5 File Names ... 368
8.3.6 File-System Errors ... 368
8.4 Data Retrieval and Telecommunications — Details ... 370
8.4.1 Protocols ... 370
8.4.2 Conserving Bandwidth ... 370
8.4.3 Initiating Telecommunications (Callback) ... 371
8.5 PakBus® Communications — Details ... 372
8.5.1 PakBus Addresses ... 372
8.5.2 Nodes: Leaf Nodes and Routers ... 372
8.5.2.1 Router and Leaf-Node Configuration ... 373
8.5.3 Linking PakBus Nodes: Neighbor Discovery ... 374
8.5.3.1 Hello-Message ... 375
8.5.3.2 Beacon ... 375
8.5.3.3 Hello-Request ... 375
8.5.3.4 Neighbor Lists ... 375
8.5.3.5 Adjusting Links ... 375
8.5.3.6 Maintaining Links ... 376
8.5.4 PakBus Troubleshooting ... 376
8.5.4.1 Link Integrity ... 376
8.5.4.1.1 Automatic Packet-Size Adjustment ... 376
8.5.4.2 Ping (PakBus) ... 377

8.5.4.3 Traffic Flow ... 377
8.5.5 LoggerNet Network-Map Configuration ... 377
8.5.6 PakBus LAN Example ... 379
8.5.6.1 LAN Wiring ... 379
8.5.6.2 LAN Setup ... 380
8.5.6.3 LoggerNet Setup ... 382
8.5.7 Route Filters ... 384
8.5.8 PakBusRoutes ... 384
8.5.9 Neighbors ... 385
8.5.10 PakBus Encryption ... 385
8.6 Alternate Telecommunications — Details ... 386
8.6.1 DNP3 — Details ... 387
8.6.1.1 DNP3 Introduction ... 387
8.6.1.2 Programming for DNP3 ... 387
8.6.1.2.1 Declarations (DNP3 Programming) ... 387
8.6.1.2.2 CRBasic Instructions (DNP3) ... 388
8.6.1.2.3 Programming for DNP3 Data Acquisition ... 389
8.6.2 Modbus — Details ... 391
8.6.2.1 Modbus Terminology ... 391
8.6.2.1.1 Glossary of Modbus Terms ... 392
8.6.2.2 Programming for Modbus ... 392
8.6.2.2.1 Declarations (Modbus Programming) ... 392
8.6.2.2.2 CRBasic Instructions (Modbus) ... 393
8.6.2.2.3 Addressing (ModbusAddr) ... 393
8.6.2.2.4 Supported Modbus Function Codes ... 393
8.6.2.2.5 Reading Inverse-Format Modbus Registers ... 394
8.6.2.3 Troubleshooting (Modbus) ... 394
8.6.2.4 Modbus over IP ... 394
8.6.2.5 Modbus Q and A ... 395
8.6.2.6 Converting Modbus 16-Bit to 32-Bit Longs ... 395
8.6.3 TCP/IP — Details ... 396
8.6.3.1 PakBus Over TCP/IP and Callback ... 396
8.6.3.2 Default HTTP Web Server ... 397
8.6.3.3 Custom HTTP Web Server ... 398
8.6.3.4 FTP Server ... 400
8.6.3.5 FTP Client ... 400
8.6.3.6 Telnet ... 401
8.6.3.7 SNMP ... 401
8.6.3.8 Ping (IP) ... 401
8.6.3.9 Micro-Serial Server ... 401
8.6.3.10 Modbus TCP/IP ... 401
8.6.3.11 DHCP ... 401
8.6.3.12 DNS ... 402
8.6.3.13 SMTP ... 402
8.6.3.14 Web API ... 402
8.6.3.14.1 Authentication ... 402
8.6.3.14.2 Command Syntax ... 403
8.6.3.14.3 Time Syntax ... 405
8.6.3.14.4 Data Management — BrowseSymbols Command ... 405
8.6.3.14.5 Data Management — DataQuery Command ... 409
8.6.3.14.6 Control — SetValueEx Command ... 415
8.6.3.14.7 Clock Functions — ClockSet Command ... 417

8.6.3.14.8 Clock Functions — ClockCheck Command 419
8.6.3.14.9 File Management — Sending a File to a Datalogger 420
8.6.3.14.10 File Management — FileControl Command 422
8.6.3.14.11 File Management — ListFiles Command 424
8.6.3.14.12 File Management — NewestFile Command 428
8.7 Datalogger Support Software — Details 429
8.8 Keyboard Display — Details 430
8.8.1 Data Display 432
8.8.1.1 Real-Time Tables and Graphs 433
8.8.1.2 Real-Time Custom 433
8.8.1.3 Final-Memory Tables 435
8.8.2 Run/Stop Program 436
8.8.3 File Display 437
8.8.3.1 File: Edit 437
8.8.4 Ports and Status 438
8.8.5 Settings 439
8.8.5.1 Set Time / Date 439
8.8.5.2 PakBus Settings 440
8.8.6 Configure Display 440
8.9 Program and OS File Compression Q and A 440
8.10 Security — Details 443
8.10.1 Vulnerabilities 443
8.10.2 Pass-Code Lockout 444
8.10.2.1 Pass-Code Lockout By-Pass 445
8.10.3 Passwords 446
8.10.3.1 .csipasswd 446
8.10.3.2 PakBus Instructions 446
8.10.3.3 TCP/IP Instructions 446
8.10.3.4 Settings — Passwords 446
8.10.4 File Encryption 447
8.10.5 Communication Encryption 447
8.10.6 Hiding Files 447
8.10.7 Signatures 447

9. Maintenance — Details 449

9.1 Protection from Moisture — Details 449
9.2 Replacing the Internal Battery 449
9.3 Factory Calibration or Repair Procedure 452

10. Troubleshooting 455

10.1 Troubleshooting — Essential Tools 455
10.2 Troubleshooting — Basic Procedure 455
10.3 Troubleshooting — Error Sources 455
10.4 Troubleshooting — Status Table 457
10.5 Programming 457
10.5.1 Program Does Not Compile 457
10.5.2 Program Compiles / Does Not Run Correctly 457
10.5.3 NAN and ±INF 458
10.5.3.1 Measurements and NAN 458

10.5.3.1.1 Voltage Measurements 458
10.5.3.1.2 SDI-12 Measurements 458
10.5.3.2 Floating-Point Math, NAN, and ±INF 458
10.5.3.3 Data Types, NAN, and ±INF 459
10.5.3.4 Output Processing and NAN 460
10.5.4 Status Table as Debug Resource 461
10.5.4.1 CompileResults 461
10.5.4.2 SkippedScan 463
10.5.4.3 SkippedSlowScan 463
10.5.4.4 SkippedRecord 464
10.5.4.5 ProgErrors 464
10.5.4.6 MemoryFree 464
10.5.4.7 VarOutOfBounds 464
10.5.4.8 Watchdog Errors 464
10.5.4.8.1 Status Table WatchdogErrors 465
10.5.4.8.2 Watchdoginfo.txt File 465
10.6 Troubleshooting — Operating Systems 466
10.7 Troubleshooting — Auto-Calibration Errors 466
10.8 Communications 466
10.8.1 RS-232 466
10.8.2 Communicating with Multiple PCs 467
10.8.3 Comms Memory Errors 467
10.8.3.1 CommsMemFree(1) 467
10.8.3.2 CommsMemFree(2) 468
10.8.3.3 CommsMemFree(3) 469
10.9 Troubleshooting — Power Supplies 469
10.9.1 Troubleshooting Power Supplies — Overview 470
10.9.2 Troubleshooting Power Supplies — Examples -- 8 10 30 470
10.9.3 Troubleshooting Power Supplies — Procedures 470
10.9.3.1 Battery Test 470
10.9.3.2 Charging Regulator with Solar-Panel Test 471
10.9.3.3 Charging Regulator with Transformer Test 473
10.9.3.4 Adjusting Charging Voltage 474
10.10 Terminal Mode 475
10.10.1 Serial Talk Through and Comms Watch 477
10.11 Logs 478
10.12 Troubleshooting — Data Recovery 478

11. Glossary 481

11.1 Terms 481
11.2 Concepts 507
11.2.1 Accuracy, Precision, and Resolution 507

12. Attributions 509

Appendices

A. CRBasic Programming Instructions 511

A.1 Program Declarations 511
A.1.1 Variable Declarations & Modifiers 512

A.1.2 Constant Declarations ... 513
A.2 Data-Table Declarations ... 514
A.2.1 Data-Table Modifiers ... 514
A.2.2 Data Destinations ... 515
A.2.3 Processing for Output to Final-Data Memory ... 516
A.2.3.1 Single-Source ... 516
A.2.3.2 Multiple-Source ... 518
A.3 Single Execution at Compile ... 518
A.4 Program Control Instructions ... 519
A.4.1 Common Program Controls ... 519
A.4.2 Advanced Program Controls ... 522
A.5 Measurement Instructions ... 524
A.5.1 Diagnostics ... 524
A.5.2 Voltage ... 525
A.5.3 Thermocouples ... 525
A.5.4 Resistive-Bridge Measurements ... 525
A.5.5 Excitation ... 526
A.5.6 Pulse and Frequency ... 527
A.5.7 Digital I/O ... 527
A.5.7.1 Control ... 528
A.5.7.2 Measurement ... 529
A.5.8 SDI-12 Sensor Suppport — Instructions ... 529
A.5.9 Specific Sensors ... 529
A.5.9.1 Wireless Sensor Network ... 532
A.5.10 Peripheral Device Support ... 532
A.6 PLC Control — Instructions ... 536
A.7 Processing and Math Instructions ... 537
A.7.1 Mathematical Operators ... 537
A.7.2 Arithmetic Operators ... 537
A.7.3 Bitwise Operations ... 537
A.7.4 Compound-Assignment Operators ... 539
A.7.5 Logical Operators ... 539
A.7.6 Trigonometric Functions ... 540
A.7.6.1 Intrinsic Trigonometric Functions ... 540
A.7.6.2 Derived Trigonometric Functions ... 541
A.7.7 Arithmetic Functions ... 542
A.7.8 Integrated Processing ... 544
A.7.9 Spatial Processing ... 545
A.7.10 Other Functions ... 546
A.7.10.1 Histograms ... 547
A.8 String Functions ... 548
A.8.1 String Operations ... 548
A.8.2 String Commands ... 549
A.9 Time Keeping — Instructions ... 552
A.10 Voice-Modem Instructions ... 554
A.11 Custom Menus — Instructions ... 555
A.12 Serial Input / Output ... 556
A.13 Peer-to-Peer PakBus® Communications ... 558
A.14 Variable Management ... 562
A.15 File Management ... 563
A.16 Data-Table Access and Management ... 565
A.17 TCP/IP — Instructions ... 567

A.18 Modem Control 571
A.19 SCADA 571
A.20 Calibration Functions 572
A.21 Satellite Systems 573
A.21.1 Argos 573
A.21.2 GOES 574
A.21.3 OMNISAT 575
A.21.4 INMARSAT-C 575
A.22 User-Defined Functions 576

B. Status, Settings, and Data Table Information (Status/Settings/DTI) 577

B.1 Status/Settings/DTI Directories 578
B.2 Status/Settings/DTI Descriptions (Alphabetical) 585

C. Serial Port Pinouts 609

C.1 CS I/O Communication Port 609
C.2 RS-232 Communication Port 609
C.2.1 Pin-Out 609
C.2.2 Power States 610

D. ASCII / ANSI Table 613

E. FP2 Data Format 617

F. Endianness 619

G. Supporting Products Lists 621

G.1 Dataloggers — List 621
G.2 Measurement and Control Peripherals — Lists 622
G.3 Sensor-Input Modules Lists 622
G.3.1 Analog-Input Modules List 622
G.3.2 Pulse-Input Modules List 622
G.3.3 Serial I/O Modules List 622
G.3.4 Vibrating-Wire Input Modules List 623
G.3.5 Passive Signal Conditioners Lists 623
G.3.5.1 Resistive-Bridge TIM Modules List 623
G.3.5.2 Voltage-Divider Modules List 623
G.3.5.3 Current-Shunt Modules List 624
G.3.5.4 Transient-Voltage Suppressors List 624
G.3.6 Terminal-Strip Covers List 624
G.4 PLC Control Modules — Lists 624
G.4.1 Digital-I/O Modules List 625
G.4.2 Continuous-Analog-Output (CAO) Modules List 625
G.4.3 Relay-Drivers — List 625
G.4.4 Current-Excitation Modules List 625
G.5 Sensors — Lists 626
G.5.1 Wired-Sensor Types List 626

G.5.2 Wireless-Network Sensors List 627
G.6 Data Retrieval and Telecommunication Peripherals — Lists 627
G.6.1 Keyboard Display — List 627
G.6.2 Hardwire, Single-Connection Comms Devices List 628
G.6.3 Hardwire, Networking Devices List 628
G.6.4 TCP/IP Links — List 629
G.6.5 Telephone Modems List 629
G.6.6 Private-Network Radios List 629
G.6.7 Satellite Transceivers List 629
G.7 Data-Storage Devices — List 629
G.8 Datalogger Support Software — Lists 630
G.8.1 Starter Software List 630
G.8.2 Datalogger Support Software — List 631
G.8.2.1 LoggerNet Suite List 631
G.8.3 Software Tools List 632
G.8.4 Software Development Kits List 633
G.9 Power Supplies — Products 633
G.9.1 Battery / Regulator Combinations List 633
G.9.2 Batteries List 634
G.9.3 Regulators List 634
G.9.4 Primary Power Sources List 634
G.9.5 24 Vdc Power Supply Kits List 635
G.10 Enclosures — Products 635
G.11 Tripods, Towers, and Mounts Lists 636
G.12 Enclosures List 636

Index 637

List of Figures

Figure 1. Data-Acquisition System Components 42
Figure 2. Wiring Panel 44
Figure 3. Power and Serial Communication Connections 48
Figure 4. PC200W Main Window 49
Figure 5. Short Cut Temperature Sensor Folder 51
Figure 6. Short Cut Thermocouple Wiring 52
Figure 7. Short Cut Outputs Tab 53
Figure 8. Short Cut Outputs Tab 54
Figure 9. Short Cut Compile Confirmation 54
Figure 10. PC200W Main Window 55
Figure 11. PC200W Monitor Data Tab – Public Table 56
Figure 12. PC200W Monitor Data Tab — Public and OneMin Tables 57
Figure 13. PC200W Collect Data Tab 57
Figure 14. PC200W View Data Utility 58
Figure 15. PC200W View Data Table 59
Figure 16. PC200W View Line Graph 60
Figure 17. Data-Acquisition System — Overview 62
Figure 18. Analog Sensor Wired to Single-Ended Channel #1 64
Figure 19. Analog Sensor Wired to Differential Channel #1 64
Figure 20. Simplified Differential-Voltage Measurement Sequence 66
Figure 21. Half-Bridge Wiring Example — Wind Vane Potentiometer 67
Figure 22. Full-Bridge Wiring Example — Pressure Transducer 68

Figure 23. Pulse-Sensor Output-Signal Types 69
Figure 24. Pulse-Input Wiring Example — Anemometer 70
Figure 25. Terminals Configurable for RS-232 Input 73
Figure 26. Use of RS-232 and Digital I/O when Reading RS-232 Devices..... 73
Figure 27. Wiring Panel 76
Figure 28. Control and Monitoring with C Terminals 79
Figure 29. CR1000KD Keyboard Display 83
Figure 30. Custom Menu Example 84
Figure 31. Enclosure 98
Figure 32. Connecting to Vehicle Power Supply 100
Figure 33. Schematic of Grounds..... 105
Figure 34. Lightning-Protection Scheme 106
Figure 35. Model of a Ground Loop with a Resistive Sensor 108
Figure 36. Device Configuration Utility (DevConfig) 110
Figure 37. Network Planner Setup 111
Figure 38. Summary of CR800 Configuration..... 120
Figure 39. CRBasic Editor Program Send File Control window 125
Figure 40. "Include File" Settings Via DevConfig..... 147
Figure 41. "Include File" Settings Via PakBusGraph 147
Figure 42. Sequential-Mode Scan Priority Flow Diagrams 156
Figure 43. Custom Menu Example — Home Screen 181
Figure 44. Custom Menu Example — View Data Window..... 181
Figure 45. Custom Menu Example — Make Notes Sub Menu..... 182
Figure 46. Custom Menu Example — Predefined Notes Pick List..... 182
Figure 47. Custom Menu Example — Free Entry Notes Window..... 182
Figure 48. Custom Menu Example — Accept / Clear Notes Window..... 182
Figure 49. Custom Menu Example — Control Sub Menu 183
Figure 50. Custom Menu Example — Control LED Pick List 183
Figure 51. Custom Menu Example — Control LED Boolean Pick List 183
Figure 52. Running-Average Frequency Response..... 192
Figure 53. Running-Average Signal Attenuation..... 193
Figure 54. Data from TrigVar Program..... 194
Figure 55. Alarms Toggled in Bit-Shift Example 197
Figure 56. Bool8 Data from Bit-Shift Example (Numeric Monitor)..... 197
Figure 57. Bool8 Data from Bit-Shift Example (PC Data File) 198
Figure 58. Quarter-Bridge Strain-Gage with RC Resistor Shunt 218
Figure 59. Strain-Gage Shunt Calibration Start 219
Figure 60. Strain-Gage Shunt Calibration Finish..... 220
Figure 61. Zero Procedure Start 220
Figure 62. Zero Procedure Finish..... 220
Figure 63. PT100 in Four-Wire Half-Bridge..... 233
Figure 64. PT100 in Three-Wire Half-Bridge..... 235
Figure 65. PT100 in Four-Wire Full-Bridge 237
Figure 66. HyperTerminal New Connection Description 249
Figure 67. HyperTerminal Connect-To Settings..... 249
Figure 68. HyperTerminal COM-Port Settings Tab..... 250
Figure 69. HyperTerminal ASCII Setup 250
Figure 70. HyperTerminal Send Text-File Example..... 251
Figure 71. HyperTerminal Text-Capture File Example 251
Figure 72. Entering SDI-12 Transparent Mode..... 261
Figure 73. Preconfigured HTML Home Page 284
Figure 74. Home Page Created Using WebPageBegin() Instruction 285

Figure 75. Customized Numeric-Monitor Web Page 285
Figure 76. Input Sample Vectors 291
Figure 77. Mean Wind-Vector Graph 292
Figure 78. Standard Deviation of Direction 293
Figure 79. Simplified voltage measurement sequence 298
Figure 80. Programmable Gain Input Amplifier (PGIA) 298
Figure 81. PGIA with Input-Signal Decomposition 302
Figure 82. Example voltage measurement accuracy band, including the effects of percent of reading and offset, for a differential measurement with input reversal at a temperature between 0 to 40 °C 306
Figure 83. Ac-Power Noise-Rejection Techniques 308
Figure 84. Input-voltage rise and transient decay 310
Figure 85. Settling Time for Pressure Transducer 313
Figure 86. Pulse-Sensor Output-Signal Types 332
Figure 87. Switch-Closure Pulse Sensor 332
Figure 88. Terminals Configurable for Pulse Input 332
Figure 89. Amplitude reduction of pulse-count waveform (before and after 1 µs µs time-constant filter) 341
Figure 90. Input Conditioning Circuit for Period Averaging 342
Figure 91. Vibrating-Wire Sensor 343
Figure 92. Circuit to Limit C Terminal Input to 5 Vdc 344
Figure 93. Current-Limiting Resistor in a Rain Gage Circuit 346
Figure 94. Current sourcing from C terminals configured for control 350
Figure 95. Relay Driver Circuit with Relay 351
Figure 96. Power Switching without Relay 351
Figure 97. PakBus Network Addressing 373
Figure 98. Flat Map 378
Figure 99. Tree Map 378
Figure 100. Configuration and Wiring of PakBus LAN 379
Figure 101. DevConfig Deployment Tab 380
Figure 102. DevConfig Deployment | ComPorts Settings Tab 381
Figure 103. DevConfig Deployment | Advanced Tab 381
Figure 104. LoggerNet Network-Map Setup: COM port 382
Figure 105. LoggerNet Network-Map Setup: PakBusPort 383
Figure 106. LoggerNet Network-Map Setup: Dataloggers 383
Figure 107. Preconfigured HTML Home Page 397
Figure 108. Home Page Created Using WebPageBegin() Instruction 398
Figure 109. Customized Numeric-Monitor Web Page 399
Figure 110. Using the Keyboard / Display 431
Figure 111. Displaying Data with the Keyboard / Display 432
Figure 112. Real-Time Tables and Graphs 433
Figure 113. Real-Time Custom 434
Figure 114. Final-Memory Tables 435
Figure 115. Run/Stop Program 436
Figure 116. File Display 437
Figure 117. File: Edit 438
Figure 118. C Terminals (Ports) Status 439
Figure 119. Settings 439
Figure 120. Configure Display 440
Figure 121. Remove Retention Nuts 450
Figure 122. Pull Edge Away from Panel 451

Figure 123. Remove Nuts to Disassemble Canister 451
Figure 124. Remove and Replace Battery 452
Figure 125. Potentiometer R3 on PS100 and CH100 Charger / Regulator . 475
Figure 126. DevConfig Terminal Tab 477
Figure 127. Relationships of Accuracy, Precision, and Resolution 508

List of Tables

Table 1. PC200W EZSetup Wizard Example Selections 49
Table 2. Differential and Single-Ended Input Terminals 65
Table 3. Pulse-Input Terminals and Measurements 69
Table 4. CR800 Wiring Panel Terminal Definitions 77
Table 5. Current Source and Sink Limits 101
Table 6. Status/Setting/DTI: Access Points 113
Table 7. Common Configuration Actions and Tools 115
Table 8. CRBasic Program Structure 121
Table 9. Program Send Options that Reset Memory* 125
Table 10. Data Table Structures 126
Table 11. Data Types in Variable Memory 128
Table 12. Data Types in Final-Data Memory 129
Table 13. Formats for Entering Numbers in CRBasic 137
Table 14. Typical Data Table 139
Table 15. TOA5 Environment Line 139
Table 16. DataInterval() Lapse Parameter Options 143
Table 17. Program Tasks 150
Table 18. Pipeline Mode Task Priorities 151
Table 19. Program Timing Instructions 152
Table 20. Rules for Names 158
Table 21. Binary Conditions of TRUE and FALSE 163
Table 22. Logical Expression Examples 163
Table 23. Data Process Abbreviations 166
Table 24. CRBasic Example. Array Assigned Expression: Sum Columns and Rows 188
Table 25. CRBasic Example. Array Assigned Expression: Transpose an Array 188
Table 26. CRBasic Example. Array Assigned Expression: Comparison / Boolean Evaluation 189
Table 27. CRBasic Example. Array Assigned Expression: Fill Array Dimension 190
Table 28. FieldCal() Codes 205
Table 29. Calibration Report for Relative Humidity Sensor 207
Table 30. Calibration Report for Salinity Sensor 209
Table 31. Calibration Report for Flow Meter 212
Table 32. Calibration Report for Water Content Sensor 214
Table 33. Summary of Analog Voltage Measurement Rates 222
Table 34. Parameters for Analog Burst Mode (601 to 2000 Hz) 226
Table 35. PRTCalc() Type-Code-1 Sensor 229
Table 36. PRTCalc() Type-Code-2 Sensor 229
Table 37. PRTCalc() Type-Code-3 Sensor 229
Table 38. PRTCalc() Type-Code-4 Sensor 230
Table 39. PRTCalc() Type-Code-5 Sensor 230
Table 40. PRTCalc() Type-Code-6 Sensor 231
Table 41. ASCII / ANSI Equivalents 238

Table 42. CR800 Serial Ports 239
Table 43. SDI-12 Commands for Transparent Mode 262
Table 44. SDI-12 Sensor Setup CRBasic Example — Results 274
Table 45. Example Power Usage Profile for a Network of SDI-12 Probes 274
Table 46. String Operators 275
Table 47. String Concatenation Examples 277
Table 48. String NULL Character Examples 278
Table 49. Extracting String Characters 279
Table 50. Use of ASCII / ANSII Codes Examples 279
Table 51. Formatting Strings Examples 280
Table 52. Formatting Hexadecimal Variables — Examples 280
Table 53. WindVector() OutputOpt Options 289
Table 54. CRBasic Parameters Varying Measurement Sequence and Timing 299
Table 55. Analog Voltage Input Ranges and Options 301
Table 56. Analog-Voltage Measurement Accuracy[1] 305
Table 57. Analog-Voltage Measurement Offsets 305
Table 58. Analog-Voltage Measurement Resolution 305
Table 59. Analog Measurement Integration 308
Table 60. Ac Noise Rejection on Small Signals[1] 309
Table 61. Ac Noise Rejection on Large Signals[1] 309
Table 62. CRBasic Measurement Settling Times 310
Table 63. First Six Values of Settling-Time Data 313
Table 64. Range-Code Option C Over-Voltages 314
Table 65. Offset Voltage Compensation Options 317
Table 66. Resistive-Bridge Circuits with Voltage Excitation 321
Table 67. Ratiometric-Resistance Measurement Accuracy 324
Table 68. StrainCalc() Instruction Equations 325
Table 69. Auto Calibration Gains and Offsets 328
Table 70. Calibrate() Instruction Results 329
Table 71. Pulse Measurements:, Terminals and Programming 333
Table 72. Example. E for a 10 Hz input signal 335
Table 73. Frequency Resolution Comparison 336
Table 74. Switch Closures and Open Collectors on P Terminals 338
Table 75. Switch Closures and Open Collectors on C Terminals 338
Table 76. Three Specifications Differing Between P and C Terminals 340
Table 77. Time Constants (τ) 341
Table 78. Low-Level Ac Amplitude and Maximum Measured Frequency 341
Table 79. CR800 Memory Allocation 352
Table 80. CR800 Main Memory 354
Table 81. Memory Drives 355
Table 82. TableFile() Instruction Data-File Formats 357
Table 83. File-Control Functions 362
Table 84. CR800 File Attributes 363
Table 85. Data-Preserve Options 365
Table 86. Powerup.ini Commands and Applications 367
Table 87. Powerup.ini Example. Code Format and Syntax 367
Table 88. Powerup.ini Example. Run Program on Power-up 367
Table 89. Powerup.ini Example. Format the USR: Drive 367
Table 90. Powerup.ini Example. Send OS on Power-up 368

Table 91. Powerup.ini Example. Run Program from USB: Drive 368
Table 92. Powerup.ini Example. Run Program Always, Erase Data 368
Table 93. Powerup.ini Example. Run Program Now, Erase Data..... 368
Table 94. File System Error Codes 369
Table 95. PakBus Leaf-Node and Router Device Configuration 373
Table 96. PakBus Link-Performance Gage..... 377
Table 97. PakBus-LAN Example Datalogger-Communication Settings 382
Table 98. Router Port Numbers..... 384
Table 99. DNP3 Implementation — Data Types Required to Store Data in Public Tables for Object Groups..... 388
Table 100. Modbus to Campbell Scientific Equivalents 391
Table 101. CRBasic Ports, Flags, Variables, and, Modbus Registers..... 393
Table 102. Supported Modbus Function Codes 394
Table 103. API Commands, Parameters, and Arguments 404
Table 104. BrowseSymbols API Command Parameters 406
Table 105. BrowseSymbols API Command Response 406
Table 106. DataQuery API Command Parameters..... 410
Table 107. SetValueEx API Command Parameters 415
Table 108. SetValue API Command Response..... 416
Table 109. ClockSet API Command Parameters 417
Table 110. ClockSet API Command Response..... 418
Table 111. ClockCheck API Command Parameters 419
Table 112. ClockCheck API Command Response..... 419
Table 113. Curl HTTPPut Request Parameters..... 421
Table 114. FileControl API Command Parameters..... 423
Table 115. FileControl API Command Response 424
Table 116. ListFiles API Command Parameters 424
Table 117. ListFiles API Command Response 425
Table 118. NewestFile API Command Parameters..... 428
Table 119. Special Keyboard-Display Key Functions 430
Table 120. Typical Gzip File Compression Results..... 442
Table 121. Internal Lithium-Battery Specifications..... 450
Table 122. Math Expressions and CRBasic Results 459
Table 123. Variable and Final-Memory Data Types with NAN and ±INF..... 460
Table 124. Warning Message Examples 462
Table 125. CommsMemFree(1) Defaults and Use Example, TLS Not Active..... 468
Table 126. CommsMemFree(1) Defaults and Use Example, TLS Active..... 468
Table 127. CR800 Terminal Commands..... 476
Table 128. Log Locations 478
Table 129. Program Send Command 498
Table 130. Arithmetic Operators..... 537
Table 131. Compound-Assignment Operators..... 539
Table 132. Derived Trigonometric Functions 542
Table 133. String Operations 548
Table 134. Asynchronous-Port Baud Rates 562
Table 135. Status/Setting/DTI: Access Points 577
Table 136. Status/Settings/DTI: Directories 578
Table 137. Status/Settings/DTI: Frequently Used..... 578
Table 138. Status/Settings/DTI: Alphabetical Listing of Keywords..... 579

Table 139. Status/Settings/DTI: Status Table Entries on CR1000KD Keyboard Display ... 580
Table 140. Status/Settings/DTI: Settings (General) on CR1000KD Keyboard Display ... 581
Table 141. Status/Settings/DTI: Settings (comport) on CR1000KD Keyboard Display ... 581
Table 142. Status/Settings/DTI: Settings (TCP/IP) on CR1000KD Keyboard Display ... 581
Table 143. Status/Settings/DTI: Settings Only in Settings Editor ... 582
Table 144. Status/Settings/DTI: Data Table Information Table (DTI) Keywords ... 582
Table 145. Status/Settings/DTI: Auto-Calibration ... 582
Table 146. Status/Settings/DTI: Communications, General ... 582
Table 147. Status/Settings/DTI: Communications, PakBus ... 582
Table 148. Status/Settings/DTI: Communications, TCP_IP I ... 582
Table 149. Status/Settings/DTI: Communications, TCP_IP II ... 583
Table 150. Status/Settings/DTI: Communications, TCP_IP III ... 583
Table 151. Status/Settings/DTI: CRBasic Program I ... 583
Table 152. Status/Settings/DTI: CRBasic Program II ... 583
Table 153. Status/Settings/DTI: Data ... 583
Table 154. Status/Settings/DTI: Memory ... 583
Table 155. Status/Settings/DTI: Miscellaneous ... 584
Table 156. Status/Settings/DTI: Obsolete ... 584
Table 157. Status/Settings/DTI: OS and Hardware Versioning ... 584
Table 158. Status/Settings/DTI: Power Monitors ... 584
Table 159. Status/Settings/DTI: Security ... 584
Table 160. Status/Settings/DTI: Signatures ... 584
Table 161. Status/Settings/DTI: B ... 585
Table 162. Baudrate() Array, Keywords, and Default Settings ... 585
Table 163. Beacon() Array, Keywords, and Default Settings ... 586
Table 164. Status/Settings/DTI: C ... 586
Table 165. Status/Settings/DTI: D ... 589
Table 166. Status/Settings/DTI: E ... 589
Table 167. Status/Settings/DTI: F ... 590
Table 168. Status/Settings/DTI: H ... 591
Table 169. Status/Settings/DTI: I ... 591
Table 170. Status/Settings/DTI: L ... 594
Table 171. Status/Settings/DTI: M ... 595
Table 172. Status/Settings/DTI: N ... 596
Table 173. Status/Settings/DTI: O ... 597
Table 174. Status/Settings/DTI: P ... 597
Table 175. Status/Settings/DTI: R ... 601
Table 176. Status/Settings/DTI: S ... 602
Table 177. Status/Settings/DTI: T ... 604
Table 178. Status/Settings/DTI: U ... 605
Table 179. Status/Settings/DTI: V ... 606
Table 180. Status/Settings/DTI: W ... 607
Table 181. CS I/O Pin Description ... 609
Table 182. CR800 RS-232 Pin-Out ... 610
Table 183. Standard Null-Modem Cable or Adapter-Pin Connections ... 611
Table 184. Decimal and hexadecimal Codes and Characters Used with CR800 Tools ... 613

Table 185. FP2 Data-Format Bit Descriptions 617
Table 186. FP2 Decimal-Locater Bits 617
Table 187. Endianness in Campbell Scientific Instruments 619
Table 188. Dataloggers 621
Table 189. Analog-Input Modules 622
Table 190. Pulse-Input Modules 622
Table 191. Serial I/O Modules List 623
Table 192. Vibrating-Wire Input Modules 623
Table 193. Resistive Bridge TIM[1] Modules 623
Table 194. Voltage Divider Modules 623
Table 195. Current-Shunt Modules 624
Table 196. Transient Voltage Suppressors 624
Table 197. Terminal-Strip Covers 624
Table 198. Digital I/O Modules 625
Table 199. Continuous-Analog-Output (CAO) Modules 625
Table 200. Relay-Drivers — Products 625
Table 201. Current-Excitation Modules 625
Table 202. Wired Sensor Types 626
Table 203. Wireless Sensor Modules 627
Table 204. Sensors Types Available for Connection to CWS900 627
Table 205. Datalogger / Keyboard Display Availability and Compatibility[1] 628
Table 206. Hardwire, Single-Connection Comms Devices 628
Table 207. Hardwire, Networking Devices 628
Table 208. TCP/IP Links 629
Table 209. Telephone Modems 629
Table 210. Private-Network Radios 629
Table 211. Satellite Transceivers 629
Table 212. Mass-Storage Devices 630
Table 213. Starter Software 630
Table 214. Datalogger Support Software 631
Table 215. LoggerNet Suite[1,2] 631
Table 216. Software Tools 632
Table 217. Software Development Kits 633
Table 218. Battery / Regulator Combinations 634
Table 219. Batteries 634
Table 220. Regulators 634
Table 221. Primary Power Sources 634
Table 222. 24 Vdc Power Supply Kits 635
Table 223. Enclosures — Products 635
Table 224. Prewired Enclosures 635
Table 225. Tripods, Towers, and Mounts 636
Table 226. Protection from Moisture — Products 636

List of CRBasic Examples

CRBasic Example 1. Simple Default.cr8 File to Control SW12 Terminal 114
CRBasic Example 2. Inserting Comments 124
CRBasic Example 3. Data Type Declarations 131
CRBasic Example 4. Using Variable Array Dimension Indices 132
CRBasic Example 5. Flag Declaration and Use 133
CRBasic Example 6. Using a Variable Array in Calculations 134

CRBasic Example 7. Initializing Variables 135
CRBasic Example 8. Using the Const Declaration 136
CRBasic Example 9. Load binary information into a variable 137
CRBasic Example 10. Definition and Use of a Data Table 140
CRBasic Example 11. Use of the Disable Variable 144
CRBasic Example 12. Using an 'Include' File 148
CRBasic Example 13. 'Include' File to Control SW12 Terminal 148
CRBasic Example 14. BeginProg / Scan() / NextScan / EndProg Syntax 153
CRBasic Example 15. Measurement Instruction Syntax 157
CRBasic Example 16. Use of Move() to Conserve Code Space 160
CRBasic Example 17. Use of Variable Arrays to Conserve Code Space 160
CRBasic Example 18. Conversion of FLOAT / LONG to Boolean 160
CRBasic Example 19. Evaluation of Integers 161
CRBasic Example 20. Constants to LONGs or FLOATs 161
CRBasic Example 21. String and Variable Concatenation 164
CRBasic Example 22. BeginProg / Scan / NextScan / EndProg Syntax 167
CRBasic Example 23. Conditional Output 168
CRBasic Example 24. Groundwater Pump Test 170
CRBasic Example 25. Miscellaneous Program Features 172
CRBasic Example 26. Scaling Array 175
CRBasic Example 27. Program Signatures 176
CRBasic Example 28. Use of Multiple Scans 177
CRBasic Example 29. Conditional Code 179
CRBasic Example 30. Custom Menus 183
CRBasic Example 31. Loading Large Data Sets 186
CRBasic Example 32. Using TrigVar to Trigger Data Storage 194
CRBasic Example 33. Two Data-Output Intervals in One Data Table 195
CRBasic Example 34. Programming with Bool8 and a Bit-Shift Operator 198
CRBasic Example 35. NSEC — One Element Time Array 201
CRBasic Example 36. NSEC — Two Element Time Array 201
CRBasic Example 37. NSEC — Seven and Nine Element Time Arrays 202
CRBasic Example 38. NSEC —Convert Timestamp to Universal Time 203
CRBasic Example 39. FieldCal() Zero 208
CRBasic Example 40. FieldCal() Offset 210
CRBasic Example 41. FieldCal() Two-Point Slope and Offset 212
CRBasic Example 42. FieldCal() Multiplier 215
CRBasic Example 43. FieldCalStrain() Calibration 218
CRBasic Example 44. Measurement with Excitation and Delay 221
CRBasic Example 45. Measuring VoltSE() at 1 Hz 223
CRBasic Example 46. Measuring VoltSE() at 100 Hz 223
CRBasic Example 47. Measuring VoltSE() at 200 Hz 224
CRBasic Example 48. Measuring VoltSE() at 2000 Hz 226
CRBasic Example 49. PT100 in Four-Wire Half-Bridge 233
CRBasic Example 50. PT100 in Three-wire Half-bridge 235
CRBasic Example 51. PT100 in Four-Wire Full-Bridge 237
CRBasic Example 52. Receiving an RS-232 String 247
CRBasic Example 53. Measure Sensors / Send RS-232 Data 252
CRBasic Example 54. Using SDI12Sensor() to Test Cv Command 269
CRBasic Example 55. Using Alternate Concurrent Command (aC) 270
CRBasic Example 56. Using an SDI-12 Extended Command 272

CRBasic Example 57. SDI-12 Sensor Setup 273
CRBasic Example 58. Concatenation of Numbers and Strings 277
CRBasic Example 59. Formatting Strings 280
CRBasic Example 60. Subroutine with Global and Local Variables 281
CRBasic Example 61. Custom Web Page HTML 286
CRBasic Example 62. Time Stamping with System Time 296
CRBasic Example 63. Measuring Settling Time 312
CRBasic Example 64. Four-Wire Full-Bridge Measurement and Processing 323
CRBasic Example 65. Implementation of DNP3 389
CRBasic Example 66. Concatenating Modbus Long Variables 395
CRBasic Example 67. Custom Web Page HTML 399
CRBasic Example 68. Using NAN to Filter Data 461
CRBasic Example 69. Using Bit-Shift Operators 538

1. Introduction

1.1 HELLO

Whether in extreme cold in Antarctica, scorching heat in Death Valley, salt spray from the Pacific, micro-gravity in space, or the harsh environment of your office, Campbell Scientific dataloggers support research and operations all over the world. Our customers work a spectrum of applications, from those more complex than any of us imagined, to those simpler than any of us thought practical. The limits of the CR800 are defined by our customers. Our intent with this operator's manual is to guide you to the tools you need to explore the limits of your application.

You can take advantage of the advanced CR800 analog and digital measurement features by spending a few minutes working through the *System Quickstart* (p. 41) and the *System Overview* (p. 61). For more demanding applications, the remainder of the manual and other Campbell Scientific publications are available. If you are programming with CRBasic, you will need the extensive help available with the *CRBasic Editor* software. Formal CR800 training is also available from Campbell Scientific.

This manual is organized to take you progressively deeper into the complexity of CR800 functions. You may not find it necessary to progress beyond the *System Quickstart* (p. 41) or *System Overview* (p. 61) sections. *System Quickstart* (p. 41) is a cursory view of CR800 data-acquisition and walks you through a first attempt at data-acquisition. *System Overview* (p. 61) reviews salient topics that are covered in-depth in subsequent sections and appendices.

Review the exhaustive table of contents to learn how the manual is organized, and, when looking for a topic, use the index and PDF reader search.

More in-depth study requires other Campbell Scientific publications, most of which are available on-line at *www.campbellsci.com*. Generally, if a particular feature of the CR800 requires a peripheral hardware device, more information is available in the manual written for that device.

If you are unable to find the information you need, need assistance with ordering, or just wish to speak with one of our many product experts about your application, please call us at (435) 227-9100 or email *support@campbellsci.com*. In earlier days, Campbell Scientific dataloggers greeted our customers with a cheery HELLO at the flip of the ON switch. While the user interface of the CR800 datalogger has advanced beyond those simpler days, you can still hear the cheery HELLO echoed in the voices you hear at Campbell Scientific.

1.2 Typography

The following type faces are used throughout the CR800 Operator's Manual. Type color other than black on white does not appear in printed versions of the manual:

- Underscore — Information specifically flagged as unverified. Usually found only in a draft or a preliminary released version.
- Capitalization — beginning of sentences, phrases, titles, names, Campbell Scientific product model numbers.

- **Bold** — CRBasic instructions within the body text, input commands, output responses, GUI commands, text on product labels, names of data tables.
- ***Page numbers*** — in the PDF version of the manual, hyperlink to the page represented by the number.
- *Italic* — glossary entries and titles of publications, software, sections, tables, figures, and examples.
- ***Bold italic*** — CRBasic instruction parameters and arguments within the body text.
- Blue — CRBasic instructions when set on a dedicated line.
- *Teal italic* — CRBasic program comments.
- CRBasic code, input commands, and output responses when set apart on dedicated lines or in program examples, as follows:

  `Lucida Sans Typewriter`

1.3 Capturing CRBasic Code

Many examples of CRBasic code are found throughout this manual. The manual is designed to make using this code as easy as possible. Keep the following in mind when copying code from this manual into *CRBasic Editor*:

If an example crosses pages, select and copy only the contents of one page at a time. Doing so will help avoid unwanted characters that may originate from page headings, page numbers, and hidden characters.

1.4 Release Notes

Preliminary Version 4/13/15 for OS v.28:

Reviewers

If feasible, please wait until a future preliminary version is available, perhaps in June of 2015, for a comprehensive review.

Readers

If any information in this manual, which is **preliminary** to address OS v. 28 changes, is mission critical, please consult a Campbell Scientific application engineer.

Primary changes since Version 5/13 are addition of the *Precautions* *(p. 7)* section and completion of about 90% of appendix *Status, Settings and Data Table Information* *(p. 577)* to reflect the major changes to the status, settings, and data table information registers introduced in OS v. 28.

The remaining sections, from *Installation* *(p. 97)* through the appendix *Supporting Product Lists* *(p. 621),* are slated for numerous updates. The following topics are among those yet to be added or updated:

Analog measurement
Arrays
CDM
Constant table
Data types
DNP3 (major revision)
Function() instruction
Keyboard display

Modbus
NewFile() instruction
Operating system management
Period averaging
Precision of variables
Programming
Route() instruction
Security
Skipped records
Subroutines
SW12 and 12V terminals
Task sequencer
Terminal mode
Time and clock
Troubleshooting
Watchdog resets

2. Cautionary Statements

- DANGER: Fire, explosion, and severe-burn hazard. Misuse or improper installation of the internal lithium battery can cause severe injury. Do not recharge, disassemble, heat above 100 °C (212 °F), solder directly to the cell, incinerate, or expose contents to water. Dispose of spent lithium batteries properly.
- WARNING:
  - Protect from over-voltage
  - Protect from water
  - Protect from *ESD* *(p. 103)*
- CAUTION: Disuse accelerates depletion of the internal battery, which backs up several functions. The internal battery will be depleted in three years or less if a CR800 is left on the shelf. When the CR800 is continuously used, the internal battery may last up to 10 or more years. See section *Internal Battery — Details* *(p. 93)* for more information.
- IMPORTANT: Maintain a level of calibration appropriate to the application. Campbell Scientific recommends factory recalibration of the CR800 every three years.

3. Initial Inspection

- Check the **Ships With** tab at http://www.campbellsci.com/CR800 for a list of items shipped with the CR800. Among other things, the following are provided for immediate use:
  - Screwdriver to connect wires to terminals
  - Type-T thermocouple for use in the *System Quickstart* (p. 41) tutorial
  - A datalogger program pre-loaded into the CR800 that measures power-supply voltage and wiring-panel temperature.
  - A serial communication cable to connect the CR800 to a PC
  - A ResourceDVD that contains product manuals and the following starter software:
    - *Short Cut*
    - *PC200W*
    - *DevConfig*
- Upon receipt of the CR800, inspect the packaging and contents for damage. File damage claims with the shipping company.
- Immediately check package contents. Thoroughly check all packaging material for product that may be concealed. Check model numbers, part numbers, and product descriptions against the shipping documents. Model or part numbers are found on each product. On cabled items, the number is often found at the end of the cable that connects to the measurement device. The Campbell Scientific number may differ from the part or model number printed on the sensor by the sensor vendor. Ensure that the expected lengths of cables were received. Contact Campbell Scientific immediately if there are any discrepancies.
- Check the operating system version in the CR800 as outlined in the section *Sending the Operating System (OS)* (p. 115), and update as needed.

4. System Quickstart

Related Topics
- *Quickstart* (p. 41)
- *Specifications* (p. 95)
- *Installation* (p. 97)
- *Operation* (p. 295)

This tutorial presents an introduction to CR800 data acquisition and a practical programming and data retrieval exercise.

4.1 Data-Acquisition Systems — Quickstart

Related Topics:
- *Data-Acquisition Systems — Quickstart* (p. 41)
- *Data-Acquisition Systems — Overview* (p. 62)

Acquiring data with a Campbell Scientific datalogger is a fairly defined procedure involving the use of electronic sensor technology, the CR800 datalogger, a telecommunication link, and *datalogger support software* (p. 485)

A CR800 is only one part of a data-acquisition system. To acquire good data, suitable sensors and a reliable data-retrieval method are required. A failure in any part of the system can lead to "bad" data or no data. A typical data-acquisition system is conceptualized in figure *Data-Acquisition System Components* (p. 42) Following is a list of typical system components:

- *Sensors* (p. 42) — Electronic sensors convert the state of a phenomenon to an electrical signal.
- *Datalogger* (p. 43) — The CR800 measures electrical signals or reads serial characters. It converts the measurement or reading to engineering units, performs calculations, and reduces data to statistical values. Data are stored in memory to await transfer to a PC by way of an external storage device or a telecommunication link.
- *Data Retrieval and Telecommunications* (p. 45) — Data are copied (not moved) from the CR800, usually to a PC, by one or more methods using datalogger support software. Most of these telecommunication options are bi-directional and so allow programs and settings to be sent to the CR800.
- *Datalogger Support Software* (p. 46) — Software retrieves data and sends programs and settings. The software manages the telecommunication link and has options for data display.
- *Programmable Logic Control* (p. 74) — Some data-acquisition systems require the control of external devices to facilitate a measurement or to control a device based on measurements. The CR800 is adept at programmable logic control. Unfortunately, there is little discussion of these capabilities in this manual. Consult *CRBasic Editor Help* (p. 123) or a Campbell Scientific Application Engineer for more information.
- *Measurement and Control Peripherals* (p. 84) — Some system requirements exceed the standard input or output compliment of the CR800. Most of these requirements can be met by addition of input and output expansion modules.

Figure 1. Data-Acquisition System Components

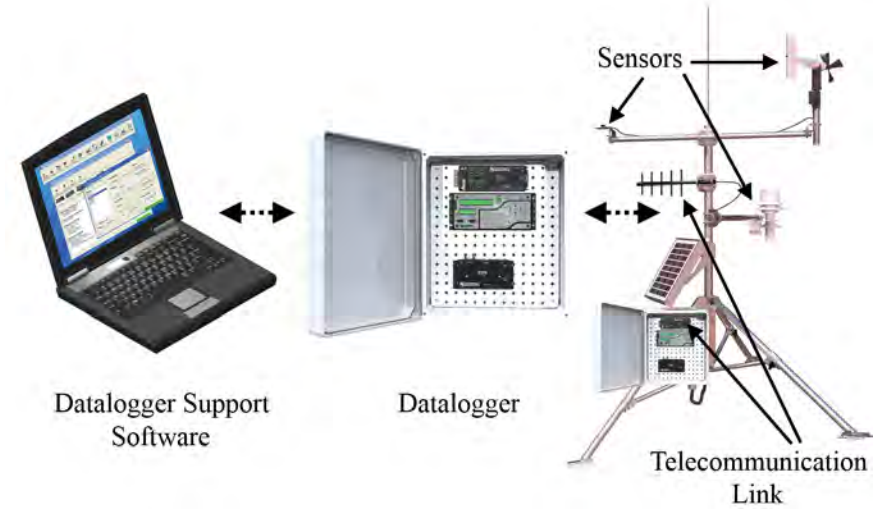

4.2 Sensors — Quickstart

Related Topics:
- *Sensors — Quickstart* (p. 42)
- *Measurements — Overview* (p. 62)
- *Measurements — Details* (p. 295)
- *Sensors — Lists* (p. 626)

Sensors transduce phenomena into measurable electrical forms by modulating voltage, current, resistance, status, or pulse output signals. Suitable sensors do this *accurately and precisely* (p. 507). Smart sensors have internal measurement and processing components and simply output a digital value in binary, hexadecimal, or ASCII character form. The CR800, sometimes with the assistance of various peripheral devices, can measure or read nearly all electronic sensor output types.

Sensor types supported include:

- Analog
  - Voltage
  - Current
  - Thermocouples
  - Resistive bridges
- Pulse
  - High frequency
  - Switch closure
  - Low-level ac
- Period average
- Vibrating wire
- Smart sensors
  - SDI-12
  - RS-232

- Modbus
- DNP3
- RS-485

Refer to the appendix *Sensors — Lists* (p. 626) for a list of specific sensors available from Campbell Scientific. A library of sensor manuals and application notes are available at *www.campbellsci.com* to assist in measuring many sensor types. The previous list of supported sensors is not necessarily comprehensive. Consult with a Campbell Scientific application engineer for assistance in measuring unfamiliar sensors.

4.3 Datalogger — Quickstart

Related Topics:
- *Datalogger — Quickstart* (p. 43)
- *Datalogger — Overview* (p. 75)
- *Dataloggers — List* (p. 621)

The CR800 can measure almost any sensor with an electrical response. The CR800 measures electrical signals and converts the measurement to engineering units, performs calculations and reduces data to statistical values. Most applications do not require that every measurement be stored but rather combined with other measurements in statistical or computational summaries. The CR800 will store data in memory to await transfer to the PC with an external storage devices or telecommunications.

CR800 electronics are protected in a sealed stainless steel shell. This design makes the CR800 economical, small, and very rugged.

4.3.1.1 Wiring Panel — Quickstart

Related Topics
- *Wiring Panel — Quickstart* (p. 43)
- *Wiring Panel — Overview* (p. 75)
- *Measurement and Control Peripherals* (p. 348)

As shown in figure *Wiring Panel* (p. 44), the CR800 wiring panel provides terminals for connecting sensors, power, and communication devices. Surge protection is incorporated internally in most wiring panel connectors.

Figure 2. Wiring Panel

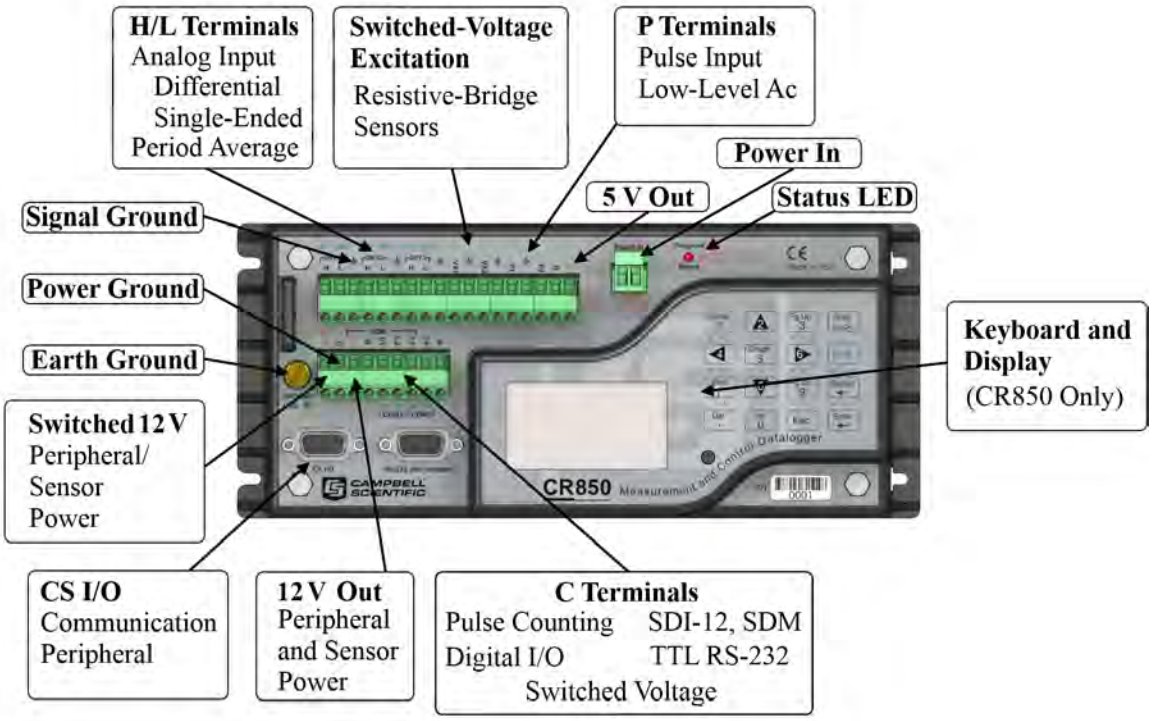

4.4 Power Supplies — Quickstart

Related Topics:
- Power Supplies — Specifications
- *Power Supplies — Quickstart* (p. 44)
- *Power Supplies — Overview* (p. 85)
- *Power Supplies — Details* (p. 98)
- *Power Supplies — Products* (p. 633)
- *Power Sources* (p. 99)
- *Troubleshooting — Power Supplies* (p. 469)

The CR800 requires a power supply. Be sure that any power supply components match the specifications of the device to which they are connected. When connecting power, first switch off the power supply, then make the connection before switching the supply on.

The CR800 is operable with power from 9.6 to 16 Vdc applied at the **POWER IN** terminals of the green connector on the face of the wiring panel.

External power connects through the green **POWER IN** connector on the face of the CR800. The positive power lead connects to **12V**. The negative lead

connects to **G**. The connection is internally reverse-polarity protected.

The CR800 is internally protected against accidental polarity reversal on the power inputs.

4.4.1 Internal Battery — Quickstart

Related Topics:
- *Internal Battery — Quickstart* (p. 45)
- *Internal Battery — Details* (p. 93)

Warning Misuse or improper installation of the internal lithium battery can cause severe injury. Fire, explosion, and severe burns can result. Do not recharge, disassemble, heat above 100 °C (212 °F), solder directly to the cell, incinerate, or expose contents to water. Dispose of spent lithium batteries properly.

A lithium battery backs up the CR800 clock, program, and memory.

4.5 Data Retrieval and Telecommunications — Quickstart

Related Topics:
- *Data Retrieval and Telecommunications — Quickstart* (p. 45)
- *Data Retrieval and Telecommunications — Overview* (p. 87)
- *Data Retrieval and Telecommunications — Details* (p. 370)
- *Data Retrieval and Telecommunication Peripherals — Lists* (p. 627)

If the CR800 datalogger sits near a PC, direct-connect serial communication is usually the best solution. In the field, direct serial, a data-storage device, can be used during a site visit. A remote telecommunication option (or a combination of options) allows you to collect data from your PC over long distances and gives you the power to discover problems early.

A Campbell Scientific application engineer can help you make a shopping list for any of these telecommunication options:

- Standard
  - RS-232 serial
- Options
  - Ethernet
  - Mass Storage
  - Cellular, Telephone
  - iOS, Android
  - PDA
  - Multidrop, Fiber Optic
  - Radio, Satellite

Some telecommunication options can be combined.

4.6 Datalogger Support Software — Quickstart

Reading List:
• *Datalogger Support Software — Quickstart* (p. 46)
• *Datalogger Support Software — Overview* (p. 93)
• *Datalogger Support Software — Details* (p. 429)
• *Datalogger Support Software — Lists* (p. 630)

Datalogger support software are PC or Linux software available from Campbell Scientific that facilitate communication between the computer and the CR800. A wide array of software are available, but this section focuses on the following:

- *Short Cut* Program Generator for Windows (SCWin)
- *PC200W* Datalogger Starter Software for Windows
- *LoggerLink* Mobile Datalogger Starter software for iOS and Android

A CRBasic program must be loaded into the CR800 to enable it to make measurements, read sensors, and store data. *Short Cut* is used to write simple CRBasic programs without the need to learn the CRBasic programming language. *Short Cut* is an easy-to-use wizard that steps you through the program building process.

After the CRBasic program is written, it is loaded onto the CR800. Then, after sufficient time has elapsed for measurements to be made and data to be stored, data are retrieved to a computer. These functions are supported by *PC200W* and *LoggerLink Mobile*.

Short Cut and *PC200W* are available at no charge at *www.campbellsci.com/downloads* (*http://www.campbellsci.com/downloads*).

Note More information about software available from Campbell Scientific can be found at *www.campbellsci.com http://www.campbellsci.com*. Please consult with a Campbell Scientific application engineer for a software recommendation to fit a specific application.

4.7 Tutorial: Measuring a Thermocouple

This tutorial illustrates the primary functions of the CR800. The exercise highlights the following:

- Attaching a sensor to the datalogger
- Creating a program for the CR800 to measure the sensor
- Making a simple measurement
- Storing measurement data
- Collecting data from the CR800 with a PC
- Viewing real-time and historical data from the CR800

4.7.1 What You Will Need

The following items are used in this exercise. If you do not have all of these items, you can provide suitable substitutes. If you have questions about compatible power supplies or serial cables, please consult a Campbell Scientific application engineer.

- CR800 datalogger
- Power supply with an output between 10 to 16 Vdc
- Thermocouple, 4 to 5 inches long, which is shipped with the CR800
- Personal computer (PC) with an available nine-pin RS-232 serial port, or with a USB port and a USB-to-RS-232 adapter
- Nine-pin female to nine-pin male RS-232 cable, which is shipped with the CR800
- *PC200W* software, which is available on the Campbell Scientific resource DVD or thumb drive, or at *www.campbellsci.com*.

Note If the CR800 datalogger is connected to the PC during normal operations, use the Campbell Scientific SC32B interface to provide optical isolation through the **CS I/O** port. Doing so protects low-level analog measurements from grounding disturbances.

4.7.2 Hardware Setup

Note The thermocouple is attached to the CR800 later in this exercise.

4.7.2.1 External Power Supply

With reference to the figure *Power and Serial Communication Connections* (p. 48), proceed as follows:

1. Remove the green power connector from the CR800 wiring panel.
2. Switch off the power supply.
3. Connect the positive lead of the power supply to the **12V** terminal of the green power connector. Connect the negative (ground) lead of the power supply to the **G** terminal of the green connector.
4. After confirming the power supply connections have the correct polarity, insert the green power connector into its receptacle on the CR800 wiring panel.
5. Connect the serial cable between the **RS-232** port on the CR800 and the RS-232 port on the PC.
6. Switch the power supply on.

Figure 3. Power and Serial Communication Connections

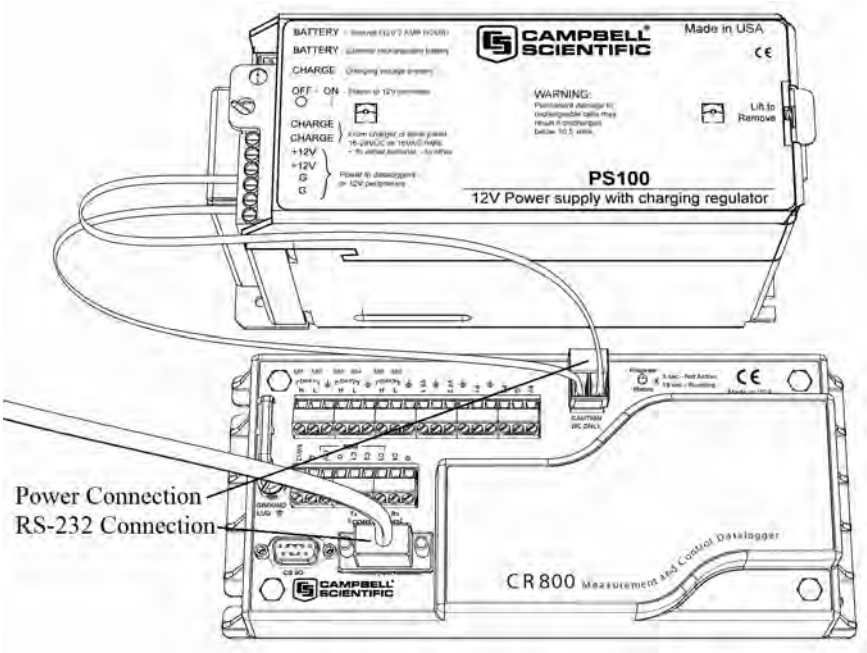

4.7.3 PC200W Software Setup

1. Install *PC200W* software onto the PC. Follow on-screen prompts during the installation process. Use the default folders.

2. Open *PC200W*. Your PC should display a window similar to figure *PC200W Main Window* (p. 49). When *PC200W* is first run, the *EZSetup Wizard* will run automatically in a new window. This will configure the software to communicate with the CR800 datalogger. The table *PC200W EZSetup Wizard Example Selections* (p. 49) indicates what information to enter on each screen of the wizard. Click **Next** at the lower portion of the window to advance.

See More! A video tutorial is available at *www.youtube.com/playlist?list=PL9E364A63D4A3520A&feature=plcp*. Other video tutorials are available at *www.campbellsci.com/videos*.

After exiting the wizard, the main *PC200W* window becomes visible. This window has several tabs. The **Clock/Program** tab displays information on the currently selected CR800 with clock and program functions. **Monitor Data** and **Collect Data** tabs are also available. Icons across the top of the window access additional functions.

Figure 4. PC200W Main Window

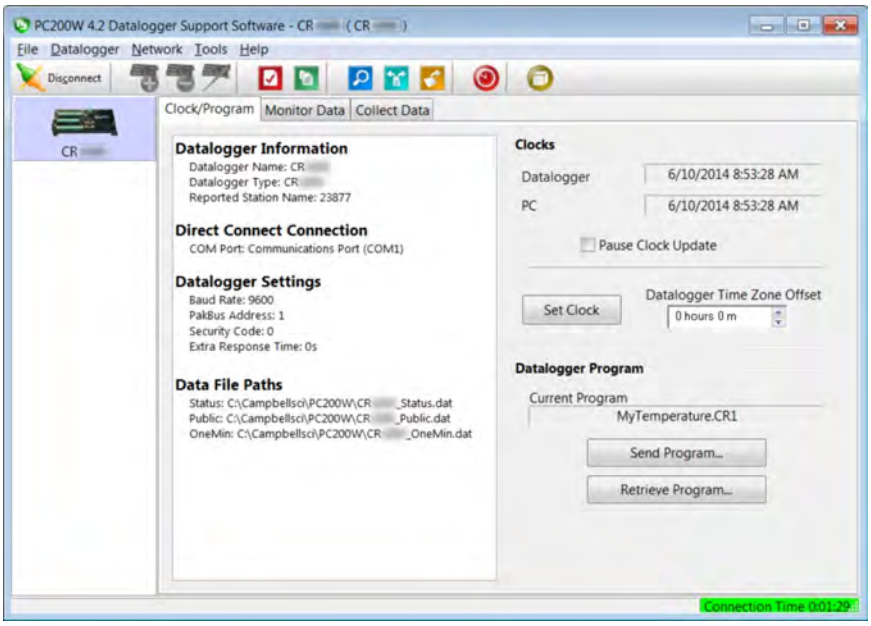

Table 1. PC200W EZSetup Wizard Example Selections	
Start the wizard to follow table entries.	
Screen Name	***Information Needed***
Introduction	Provides an introduction to the *EZSetup Wizard* along with instructions on how to navigate through the wizard.
Datalogger Type and Name	Select the CR800 from the list box. Accept the default name of "CR800."
COM Port Selection	Select the correct PC COM port for the serial connection. Typically, this will be COM1. Other COM numbers are possible, especially when using a USB cable. Leave **COM Port Communication Delay** at **00** seconds. **Note** When using USB serial cables, the COM number may change if the cable is moved to a different USB port. This will prevent data transfer between the software and CR800. Should this occur, simply move the cable back to the original port. If this is not possible, close then reopen the *PC200W* software to refresh the available COM ports. Click on **Edit Datalogger Setup** and change the COM port to the new port number.
Datalogger Settings	Configures how the CR800 communicates with the PC. For this tutorial, accept the default settings.
Datalogger Settings - Security	For this tutorial, **Security Code** should be set to **0** and **PakBus Encryption Key** should be left blank.
Communication Setup Summary	Provides a summary of settings in previous screens. No changes are needed for this tutorial. Press **Finish** to exit the wizard.

4.7.4 Write CRBasic Program with Short Cut

Short Cut objectives:

- Create a program to measure the voltage of the CR800 power supply, temperature of the CR800 wiring-panel, and ambient air temperature using a thermocouple.
- When program is downloaded to the CR800, it takes samples once per second and stores averages of these values at one-minute intervals.

See More A video tutorial is available at *www.youtube.com/playlist?list=PLCD0CAFEAD0390434&feature=plcp* *http://www.youtube.com/playlist?list=PLCD0CAFEAD0390434&feature=plcp*. Other video resources are available at *www.campbellsci.com/videos*.

4.7.4.1 Procedure: (Short Cut Steps 1 to 5)

1. Click on the *Short Cut* icon in the upper-right corner of the *PC200W* window. The icon resembles a clock face.
2. The *Short Cut* window is shown. Click **New Program**.
3. In the **Datalogger Model** drop-down list, select **CR800**.
4. In the **Scan Interval** box, enter **1** and select **Seconds** in the drop-down list box. Click **Next**.

Note The first time *Short Cut* is run, a prompt will appear asking for a choice of ac noise rejection. Select **60 Hz** for the United States and areas using 60 Hz ac voltage. Select **50 Hz** for most of Europe and areas that operate at 50 Hz.

A second prompt lists sensor support options. **Campbell Scientific, Inc. (US)** is probably the best fit if you are outside Europe.

5. The next window displays **Available Sensors and Devices**. Expand the **Sensors** folder by clicking on the ▷ symbol. This shows several sub-folders. Expand the **Temperature** folder to view available sensors. Note that a wiring panel temperature (**PTemp_C** in the **Selected** column) is selected by default.

Figure 5. Short Cut Temperature Sensor Folder

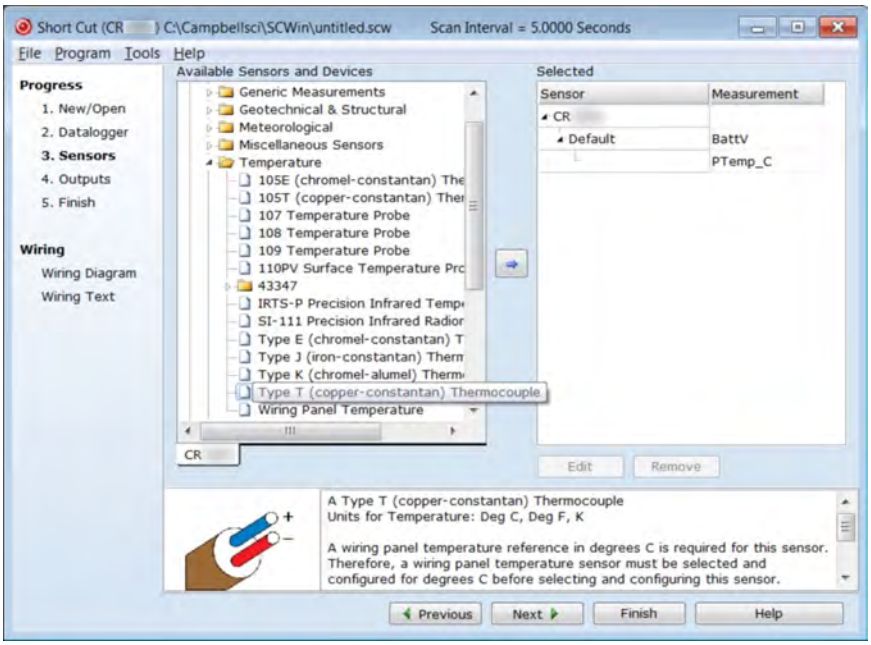

4.7.4.2 Procedure: (Short Cut Steps 6 to 7)

6. Double-click **Type T (copper-constantan) Thermocouple** to add it into the **Selected** column. A dialog window is presented with several fields. By immediately clicking **OK**, you accept default options that include selection of **1** sensor and **PTemp_C** as the reference temperature measurement.

Note **BattV** (battery voltage) and **PTempC** (wiring panel temperature) are default measurements. During operation, battery and temperature should be recorded at least daily to assist in monitoring system status.

7. At the left portion of the main *Short Cut* window, click **Wiring Diagram**. Attach the physical type-T thermocouple to the CR800 as shown in the diagram. Click on **3. Sensors** in the left portion of the window to return to the sensor selection screen.

Figure 6. Short Cut Thermocouple Wiring

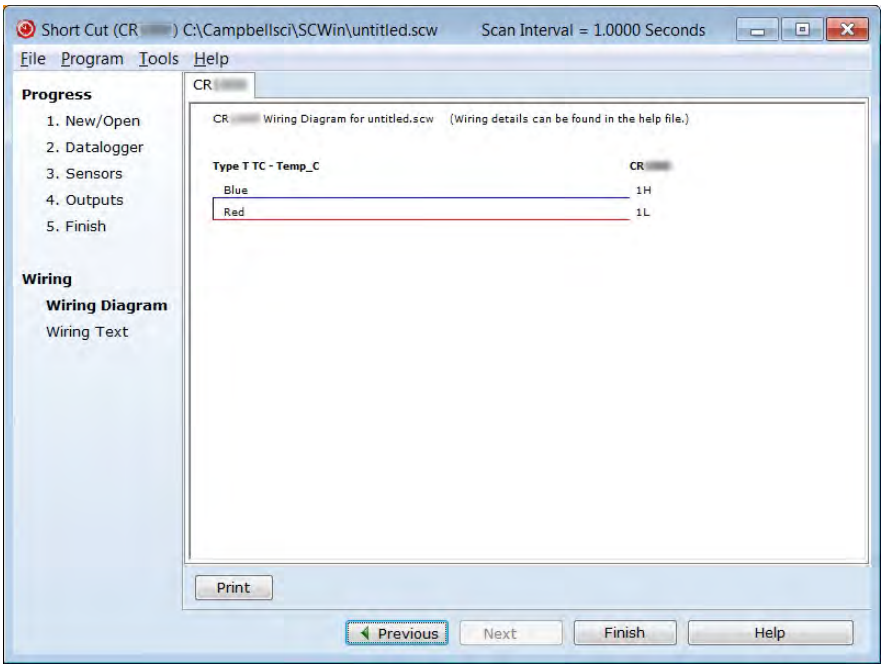

4.7.4.3 Procedure: (Short Cut Step 8)

Historical Note In the space-race era, measuring thermocouples in the field was a complicated and cumbersome process incorporating a three-junction thermocouple, a micro-voltmeter, a vacuum flask filled with an ice slurry, and a thick reference book. One junction connected to the micro-voltmeter. Another sat in the vacuum flask as a 0 °C reference. The third was inserted into the location of the temperature of interest. When the microvolt measurement settled out, the microvolt reading was recorded by hand. This value was then looked up on the appropriate table in the reference book to determine the equivalent temperature.

Then along came Eric and Evan Campbell. Campbell Scientific designed the first CR7 datalogger to make thermocouple measurements without the need for vacuum flasks, reference books, or three junctions. Now, there's an idea!

Nowadays, a thermocouple need only consist of two wires of dissimilar metals, such as copper and constantan, joined at one end. The joined end is the measurement junction; the junction that is created when the two wires of dissimilar metals are wired to CR800 analog input terminals is the reference junction.

When the two junctions are at different temperatures, a voltage proportional to the temperature difference is induced in the wires. The thermocouple measurement requires the reference-junction temperature to calculate the measurement-junction temperature using proprietary algorithms in the CR800 operating system.

8. Click **Next** to advance to the **Outputs** tab, which displays the list **Selected Sensors** to the left and data storage tables to the right under **Selected Outputs**.

Figure 7. Short Cut Outputs Tab

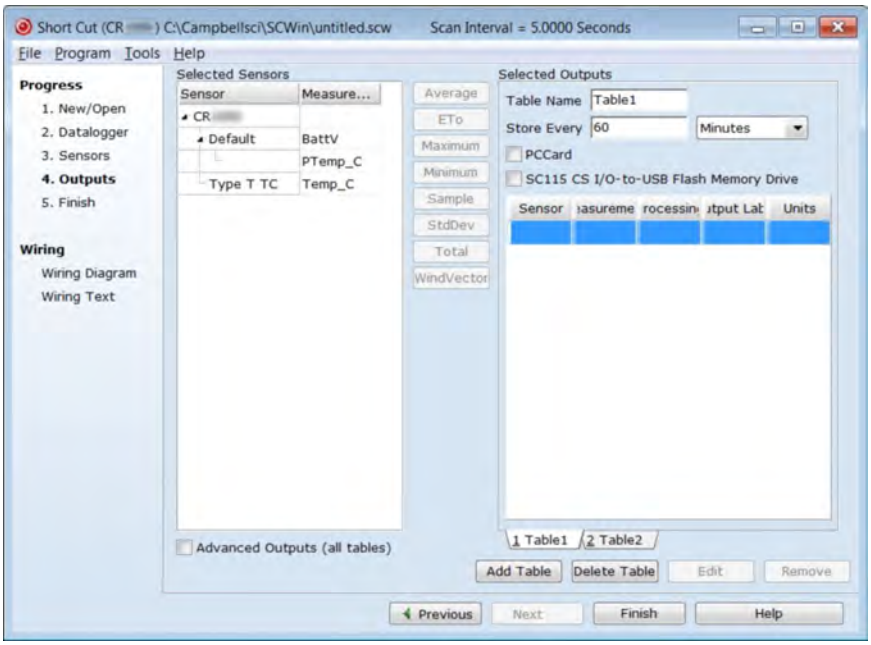

4.7.4.4 Procedure: (Short Cut Steps 9 to 12)

9. Two output tables (**1 Table1** and **2 Table2** tabs) are initially available. Both tables have a **Store Every** field and a drop-down list from which to select the time units. These are used to set the time intervals when data are stored.

10. Only one table is needed for this tutorial, so Table 2 can be removed. Click **2 Table2**, then click **Delete Table**.

11. Change the name of the remaining table from **Table1** to **OneMin**, and then change the **Store Every** interval to **1 Minutes**.

12. Add measurements to the table by selecting **BattV** under **Selected Sensors**, and then clicking **Average** in the center column of buttons. Repeat this procedure for **PTemp_C** and **Temp_C**.

*Figure 8. Short Cut **Outputs** Tab*

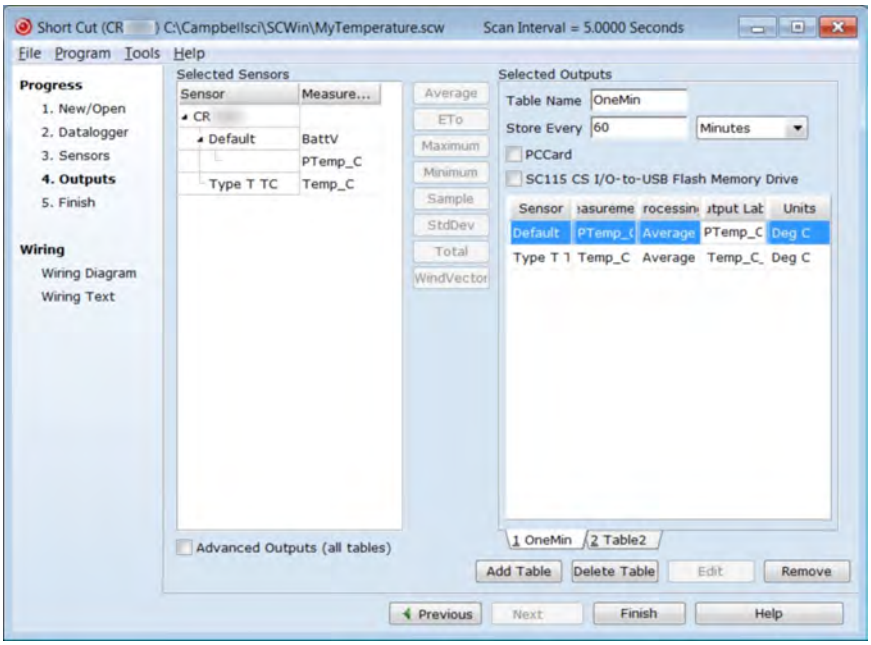

4.7.4.5 Procedure: (Short Cut Steps 13 to 14)

13. Click **Finish** to compile the program. Give the program the name **MyTemperature**. A summary screen will appear showing the compiler results. Any errors during compiling will be displayed.

Figure 9. Short Cut Compile Confirmation

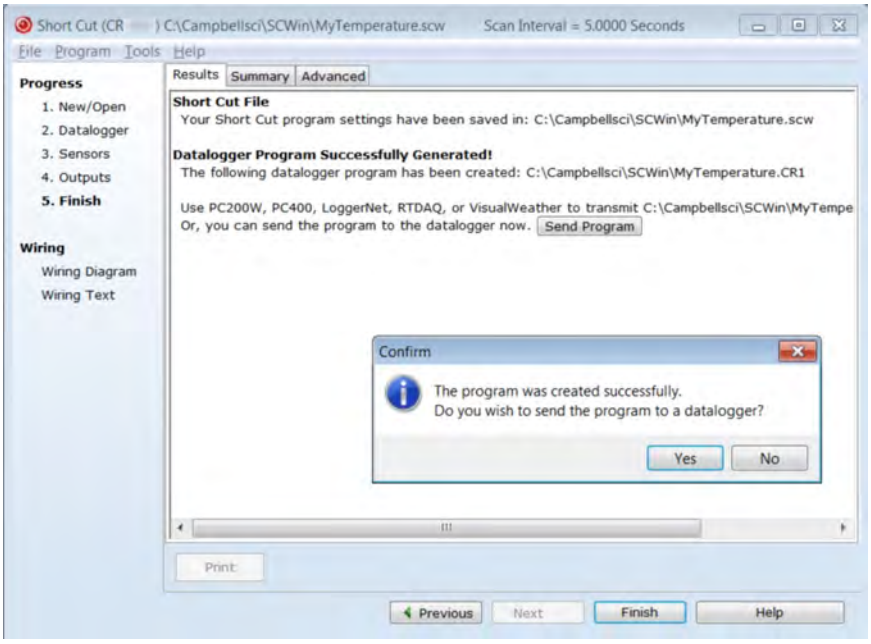

14. Close this window by clicking on **X** in the upper right corner.

4.7.5 Send Program and Collect Data

PC200W Datalogger Support Software objectives:

- Send the CRBasic program created by *Short Cut* in the previous procedure to the CR800.
- Collect data from the CR800.
- Store the data on the PC.

4.7.5.1 Procedure: (PC200W Step 1)

1. From the *PC200W* **Clock/Program** tab, click on **Connect** button to establish communications with the CR800. When communications have been established, the button will change to **Disconnect**.

Figure 10. PC200W Main Window

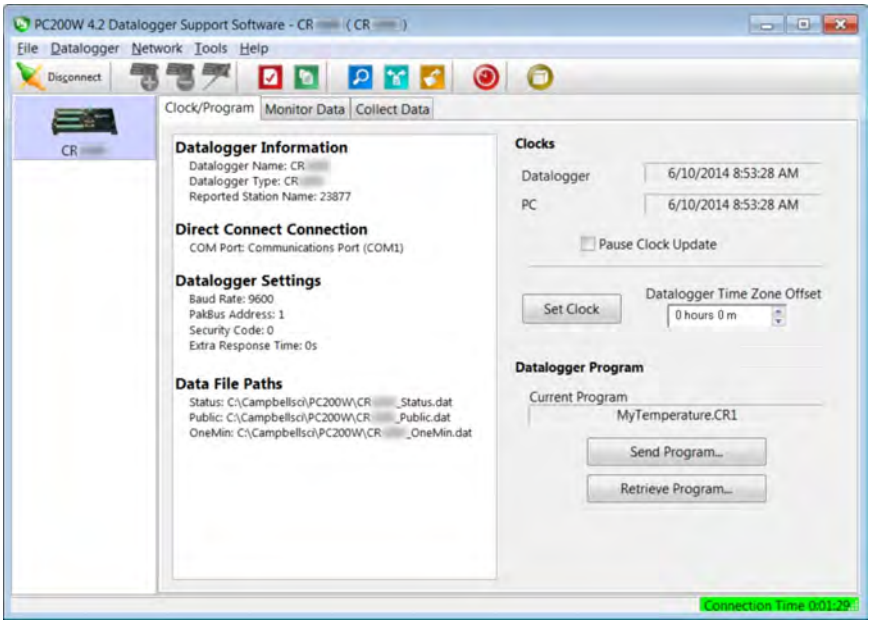

4.7.5.2 Procedure: (PC200W Steps 2 to 4)

2. Click **Set Clock** to synchronize the CR800 clock with the computer clock.

3. Click **Send Program...**. A warning will appear that data on the datalogger will be erased. Click **Yes**. A dialog box will open. Browse to the *C:\CampbellSci\SCWin* folder. Select the **MyTemperature.cr8** file. Click **Open**. A status bar will appear while the program is sent to the CR800 followed by a confirmation that the transfer was successful. Click **OK** to close the confirmation.

4. After sending a program to the CR800, a good practice is to monitor the measurements to ensure they are reasonable. Select the **Monitor Data** tab. The window now displays data found in the CR800 **Public** table.

*Figure 11. PC200W **Monitor Data** Tab – **Public** Table*

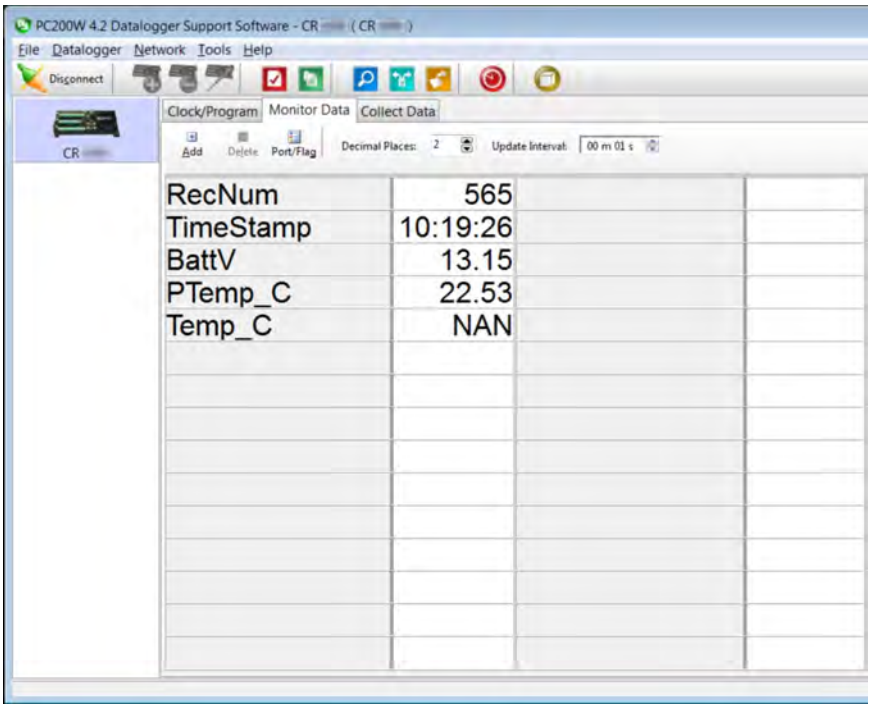

4.7.5.3 Procedure: (PC200W Step 5)

5. To view the **OneMin** table, select an empty cell in the display area. Click **Add**. In the **Add Selection** window **Tables** field, click on **OneMin**, then click **Paste**. The **OneMin** table is now displayed.

*Figure 12. PC200W **Monitor Data** Tab — Public and OneMin Tables*

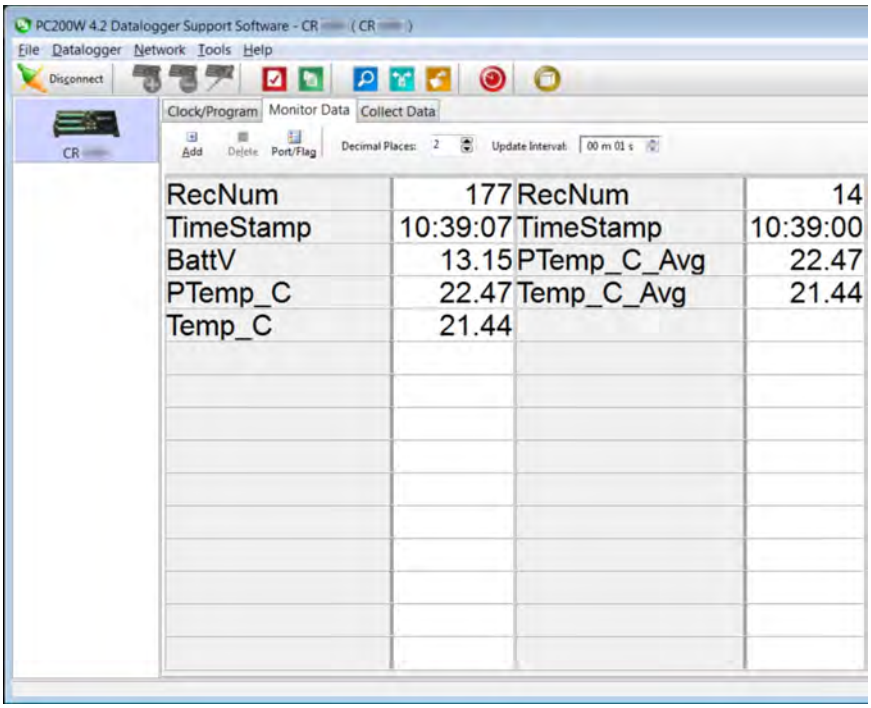

4.7.5.4 Procedure: (PC200W Step 6)

6. Click on the **Collect Data** tab and select data to be collected and the storage location on the PC.

*Figure 13. PC200W **Collect Data** Tab*

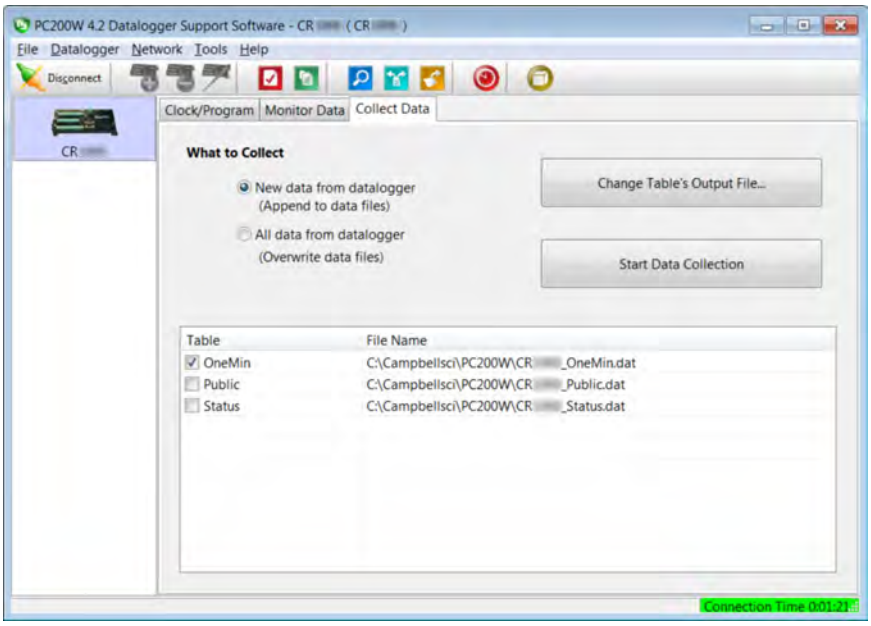

4.7.5.5 Procedure: (PC200W Steps 7 to 10)

7. Click the **OneMin** box so a check mark appears in the box. Under **What to Collect**, select **New data from datalogger**. This selects the data to be collected.

8. Click on a table in the list to highlight it, then click **Change Table's Output File...** to change the name of the destination file.

9. Click on **Collect**. A progress bar will appear as data are collected, followed by a **Collection Complete** message. Click **OK** to continue.

10. To view data, click the icon at the top of the *PC200W* window to open the *View* utility.

*Figure 14. PC200W **View** Data Utility*

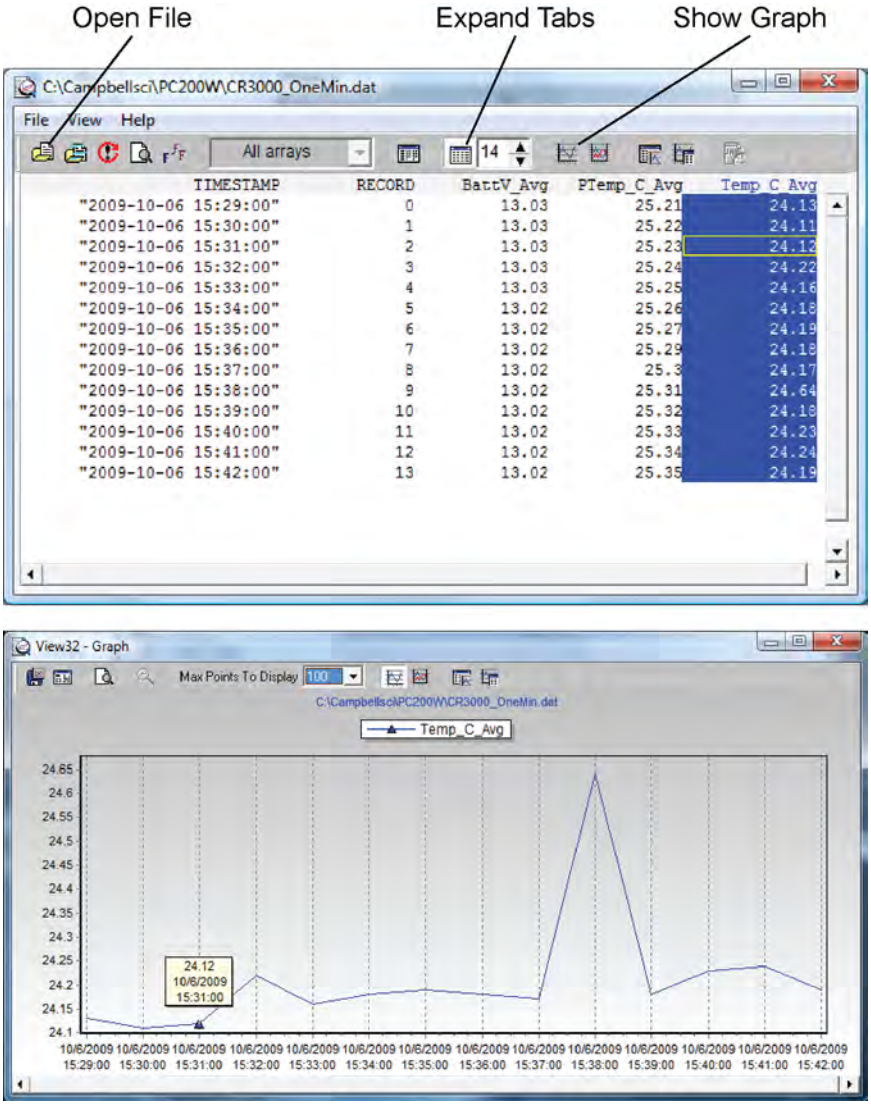

4.7.5.6 Procedure: (PC200W Steps 11 to 12)

11. Click on to open a file for viewing. In the dialog box, select the **CR800_OneMin.dat** file and click **Open**.
12. The collected data are now shown.

*Figure 15. PC200W **View** Data Table*

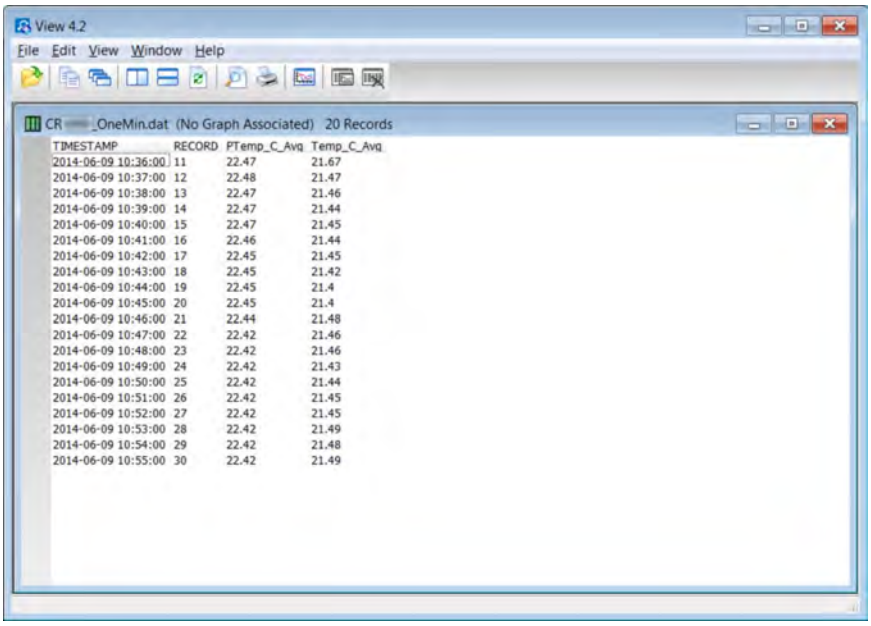

TIMESTAMP	RECORD	PTemp_C_Avg	Temp_C_Avg
2014-06-09 10:36:00	11	22.47	21.67
2014-06-09 10:37:00	12	22.48	21.47
2014-06-09 10:38:00	13	22.47	21.46
2014-06-09 10:39:00	14	22.47	21.44
2014-06-09 10:40:00	15	22.47	21.45
2014-06-09 10:41:00	16	22.46	21.44
2014-06-09 10:42:00	17	22.45	21.45
2014-06-09 10:43:00	18	22.45	21.42
2014-06-09 10:44:00	19	22.45	21.4
2014-06-09 10:45:00	20	22.45	21.4
2014-06-09 10:46:00	21	22.44	21.48
2014-06-09 10:47:00	22	22.42	21.46
2014-06-09 10:48:00	23	22.42	21.46
2014-06-09 10:49:00	24	22.42	21.43
2014-06-09 10:50:00	25	22.42	21.44
2014-06-09 10:51:00	26	22.42	21.45
2014-06-09 10:52:00	27	22.42	21.45
2014-06-09 10:53:00	28	22.42	21.49
2014-06-09 10:54:00	29	22.42	21.48
2014-06-09 10:55:00	30	22.42	21.49

4.7.5.7 Procedure: (PC200W Steps 13 to 14)

13. Click the heading of any data column. To display the data in that column in a line graph, click the icon.
14. Close the **Graph** and **View** windows, and then close the *PC200W* program.

*Figure 16. PC200W **View** Line Graph*

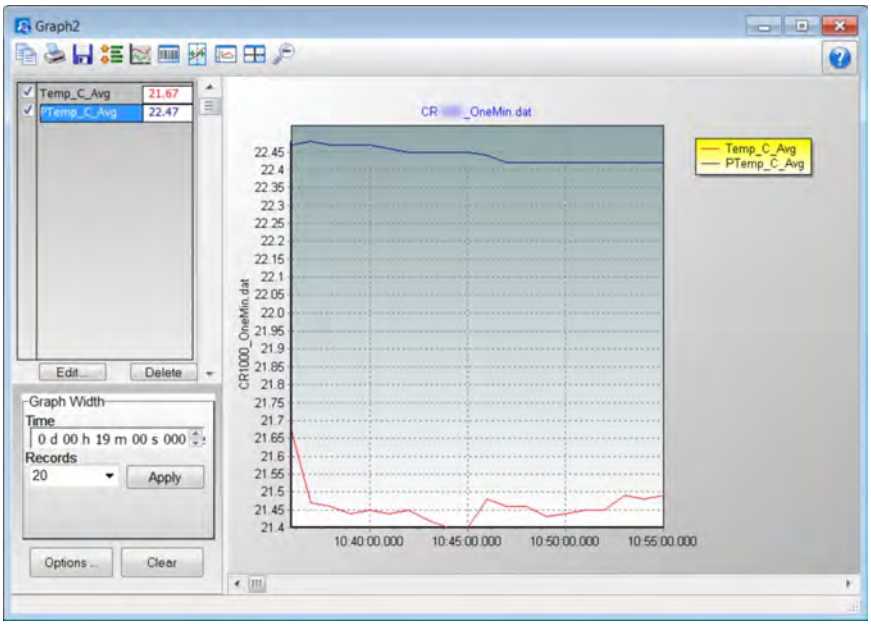

5. System Overview

Related Topics
- *Quickstart* (p. 41)
- *Specifications* (p. 95)
- *Installation* (p. 97)
- *Operation* (p. 295)

A Campbell Scientific data-acquisition system is made up of the following basic components:

- Sensors
- Datalogger, which includes:
  - Clock
  - Measurement and control circuitry
  - Hardware and firmware to communicate with telecommunication devices
  - User-entered CRBasic program
- Telecommunication link or external storage device
- *Datalogger support software* (p. 485)

The figure *Data-Acquisition Systems — Overview* (p. 62) illustrates a common CR800-based data-acquisition system.

Figure 17. Data-Acquisition System — Overview

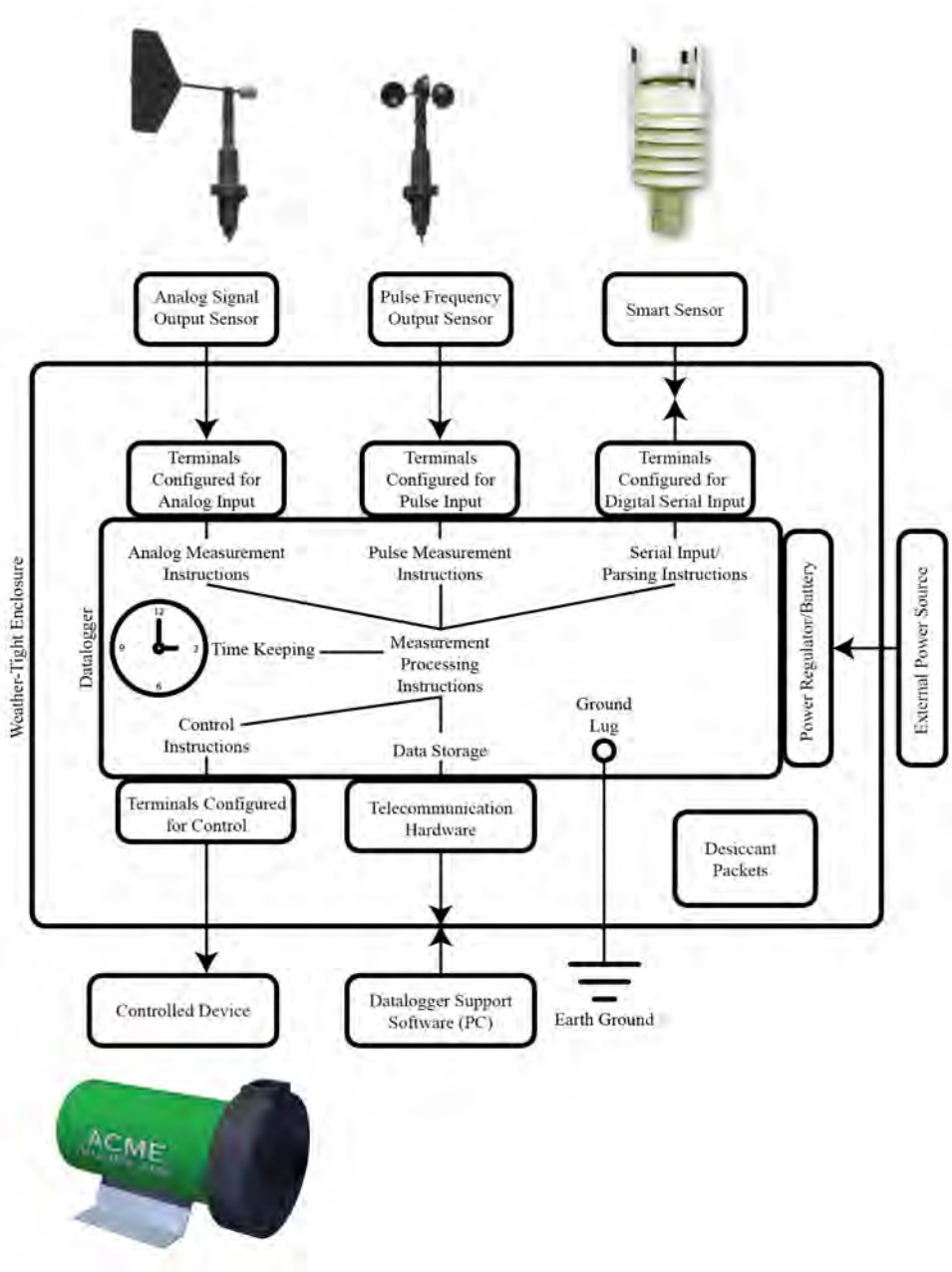

5.1 Measurements — Overview

Related Topics:

- *Sensors — Quickstart* (p. 42)
- *Measurements — Overview* (p. 62)
- *Measurements — Details* (p. 295)
- *Sensors — Lists* (p. 626)

Most electronic sensors, whether or not they are supplied by Campbell Scientific, can be connected directly to the CR800.

Manuals that discuss alternative input routes, such as external multiplexers, peripheral measurement devices, or a wireless sensor network, can be found at *www.campbellsci.com/manuals* (*http://www.campbellsci.com/manuals*). You can also consult with a Campbell Scientific application engineer.

This section discusses direct sensor-to-datalogger connections and applicable CRBasic programming to instruct the CR800 how to make, process, and store the measurements. The CR800 wiring panel has terminals for the following measurement inputs:

5.1.1 Time Keeping — Overview

Related Topics:
- *Time Keeping — Overview* (p. 75)
- *Time Keeping — Details* (p. 295)

Measurement of time is an essential function of the CR800. Time measurement with the on-board clock enables the CR800 to attach time stamps to data, measure the interval between events, and time the initiation of control functions.

5.1.2 Analog Measurements — Overview

Related Topics:
- *Analog Measurements — Overview* (p. 63)
- *Analog Measurements — Details* (p. 297)

Analog sensors output a continuous voltage or current signal that varies with the phenomena measured. Sensors compatible with the CR800 output a voltage. Current output can be made compatible with a resistive shunt.

Sensor connection is to **H**/**L**] terminals configurable for differential (**DIFF**) or single-ended (**SE**) inputs. For example, differential channel 1 is comprised of terminals **1H** and **1L**, with **1H** as high and **1L** as low.

5.1.2.1 Voltage Measurements — Overview

Related Topics:
- Voltage Measurements — Specifications
- *Voltage Measurements — Overview* (p. 63)
- *Voltage Measurements — Details* (p. 297)

- Maximum input voltage range: ±5000 mV
- Measurement resolution range: 0.67 µV to 1333 µV

Single-ended and differential connections are illustrated in the figures *Analog Sensor Wired to Single-Ended Channel #1* (p. 64) and *Analog Sensor Wired to Differential Channel #1* (p. 64). Table *Differential and Single-Ended Input Terminals* (p. 65) lists CR800 analog-input channel termnal assignments.

Conceptually, analog-voltage sensors output two signals: high and low. Sometimes, the low signal is simply sensor ground. A single-ended measurement measures the high signal with reference to ground, with the low signal tied to

ground. A differential measurement measures the high signal with reference to the low signal. Each configuration has a purpose, but the differential configuration is usually preferred.

A differential configuration may significantly improve the voltage measurement. Following are conditions the often indicate that a differential measurement should be used:

- Ground currents cause voltage drop between the sensor and the signal-ground terminal. Currents >5 mA are usually considered undesirable. These currents may result from resistive-bridge sensors using voltage excitation, but these currents only flow when the voltage excitation is applied. Return currents associated with voltage excitation cannot influence other single-ended measurements of small voltage unless the same voltage-excitation terminal is enabled during the unrelated measurements.
- Measured voltage is less than 200 mV.

Figure 18. Analog Sensor Wired to Single-Ended Channel #1

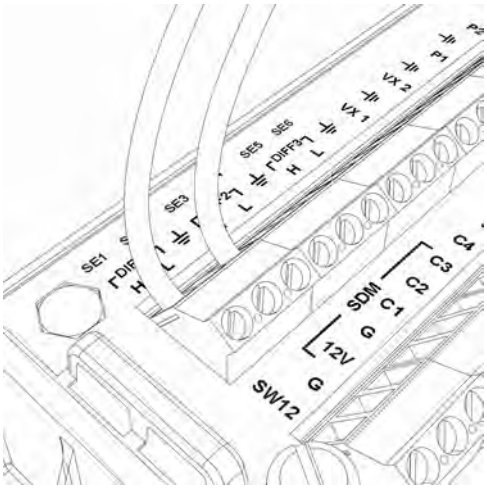

Figure 19. Analog Sensor Wired to Differential Channel #1

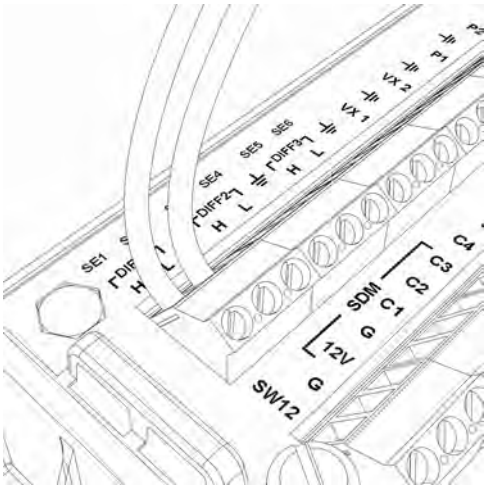

Table 2. Differential and Single-Ended Input Terminals	
DIFF Terminals	***SE Terminals***
1H	**1**
1L	**2**
2H	**3**
2L	**4**
3H	**5**
3L	**6**

5.1.2.1.1 Single-Ended Measurements — Overview

Related Topics:
- *Single-Ended Measurements — Overview* (p. 65)
- *Single-Ended Measurements — Details* (p. 299)

A single-ended measurement measures the difference in voltage between the terminal configured for single-ended input and the reference ground. The measurement sequence is illustrated in figure *Simplified Voltage Measurement Sequence* (p. 298). While differential measurements are usually preferred, a single-ended measurement is often adequate in applications wherein some types of noise are not a problem and care is taken to avoid problems caused by ground currents. Examples of applications wherein a single-ended measurement may be preferred include:

- Not enough differential terminals available. Differential measurements use twice as many **H**/**L**] terminals as do single-ended measurements.
- Rapid sampling is required. Single-ended measurement time is about half that of differential measurement time.
- Sensor is not designed for differential measurements. Many Campbell Scientific sensors are not designed for differential measurement, but the draw backs of a single-ended measurement are usually mitigated by large programmed excitation and/or sensor output voltages.
-

However, be aware that because a single-ended measurement is referenced to CR800 ground, any difference in ground potential between the sensor and the CR800 will result in error, as emphasized in the following examples:

- If the measuring junction of a thermocouple used to measure soil temperature is not insulated, and the potential of earth ground is greater at the sensor than at the point where the CR800 is grounded, a measurement error will result. For example, if the difference in grounds is 1 mV, with a copper-constantan thermocouple, the error will be approximately 25 °C.
- If signal conditioning circuitry, such as might be found in a gas analyzer, and the CR800 use a common power supply, differences in current drain and lead resistance often result in different ground potentials at the two instruments despite the use of a common ground. A differential measurement should be made on the analog output from the external signal conditioner to avoid error.

5.1.2.1.2 Differential Measurements — Overview

Related Topics:
- *Differential Measurements — Overview* (p. 66)
- *Differential Measurements — Details* (p. 300)

Summary Use a differential configuration when making voltage measurements, unless constrained to do otherwise.

A differential measurement measures the difference in voltage between two input terminals. Its sequence is illustrated in the figure *Simplified Differential-Voltage Measurement Sequence* (p. 66), and is characterized by multiple automatic measurements, the results of which are averaged automatically before the final value is reported. For example, the sequence on a differential measurement using the **VoltDiff()** instruction involves two measurements — first with the high input referenced to the low, then with the inputs reversed. Reversing the inputs before the second measurement cancels noise common to both leads as well as small errors caused by junctions of different metals that are throughout the measurement electronics.

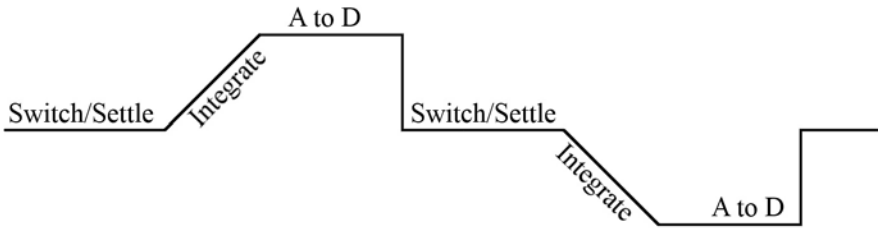

Figure 20. Simplified Differential-Voltage Measurement Sequence

5.1.2.2 Current Measurements — Overview

Related Topics:
- *Current Measurements — Overview* (p. 66)
- *Current Measurements — Details* (p. 319)

A measurement of current is accomplished through the use of external resistors to convert current to voltage, then measure the voltage as explained in the section *Differential Measurements — Overview* (p. 66). The voltage is measured with the CR800 voltage measurement circuitry.

5.1.2.3 Resistance Measurements — Overview

Related Topics:
- Resistance Measurements — Specifications
- *Resistance Measurements — Overview* (p. 66)
- *Resistance Measurements — Details* (p. 319)
- *Resistance Measurements — Instructions* (p. 525)

Many analog sensors use a variable-resistive device as the fundamental sensing element. These elements are placed in a wheatstone bridge or related circuit. The CR800 can measure most bridge circuit configurations. A bridge measurement is

a special case voltage measurement. Examples include:

- Strain gage: resistance in a pressure-transducer strain gage correlates to a water pressure.
- Position potentiometer: a change in resistance in a wind-vane potentiometer correlates to a change in wind direction.

5.1.2.3.1 Voltage Excitation

Bridge resistance is determined by measuring the difference between a known voltage applied to the excitation (input) arm of a resistor bridge and the voltage measured on the output arm. The CR800 supplies a precise-voltage excitation via **Vx** terminals . Return voltage is measured on **H**/**L**] terminals configured for single-ended or differential input. Examples of bridge-sensor wiring using voltage excitation are illustrated in figures *Half-Bridge Wiring — Wind Vane Potentiometer* (p. 67) and *Full-Bridge Wiring — Pressure Transducer* (p. 68).

Figure 21. Half-Bridge Wiring Example — Wind Vane Potentiometer

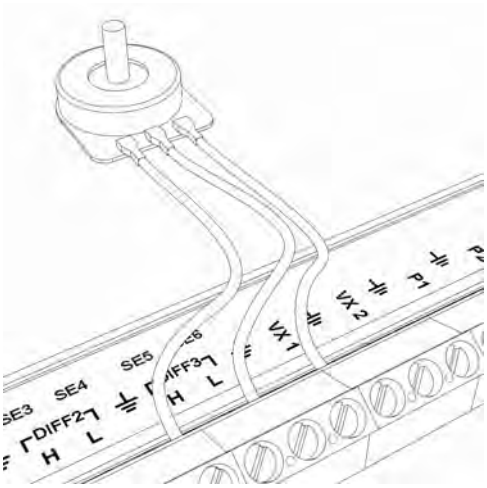

Figure 22. Full-Bridge Wiring Example — Pressure Transducer

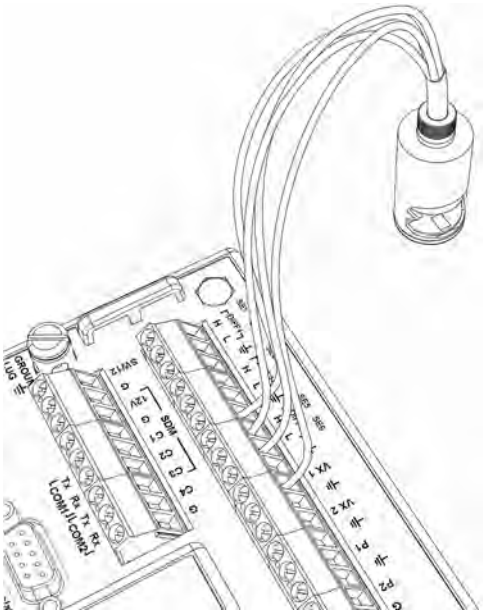

5.1.2.4 Strain Measurements — Overview

Related Topics:
- *Strain Measurements — Overview* *(p. 68)*
- *Strain Measurements — Details* *(p. 324)*
- *FieldCalStrain() Examples* *(p. 216)*

Strain gage measurements are usually associated with structural-stress analysis. When making strain measurements, please first consult with a Campbell Scientific application engineer.

5.1.3 Pulse Measurements — Overview

Related Topics:
- Pulse Measurements — Specifications
- *Pulse Measurements — Overview* *(p. 68)*
- *Pulse Measurements — Details* *(p. 331)*
- *Pulse Measurements — Instructions* *(p. 527)*

The output signal generated by a pulse sensor is a series of voltage waves. The sensor couples its output signal to the measured phenomenon by modulating wave frequency. The CR800 detects the state transition as each wave varies between voltage extremes (high-to-low or low-to-high). Measurements are processed and presented as counts, frequency, or timing data.

P terminals are configurable for pulse input to measure counts or frequency from the following signal types:

- High-frequency 5 Vdc square-wave
- Switch closure
- Low-level ac

C terminals configurable for input for the following:

- State
- Edge counting
- Edge timing
  - Resolution — 540 ns

Note A period-averaging sensor has a frequency output, but it is connected to a **SE** terminal configured for period-average input and measured with the **PeriodAverage()** instruction (see section *Period Averaging — Overview* (p. 70)).

5.1.3.1 Pulses Measured

Pulse outputs vary. These variations are illustrated in the figure *Pulse-Sensor Output-Signal Types* (p. 69).

Figure 23. Pulse-Sensor Output-Signal Types

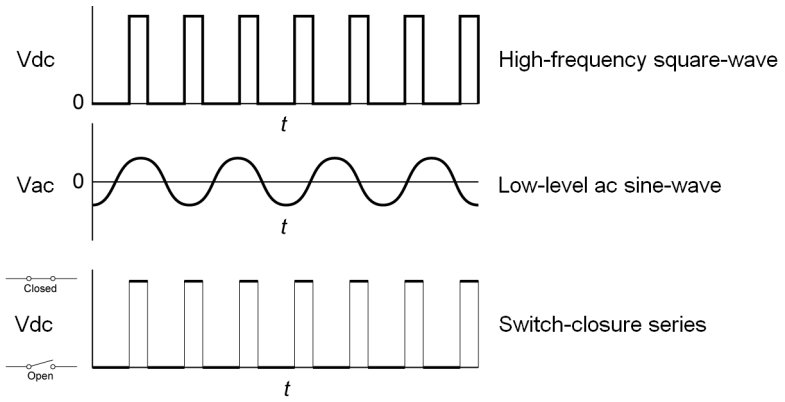

5.1.3.2 Pulse-Input Channels

Table *Pulse-Input Channels and Measurements* (p. 69) lists devices, channels and options for measuring pulse signals.

Table 3. Pulse-Input Terminals and Measurements

Pulse-Input Terminal	*Input Type*	*Data Option*	*CRBasic Instruction*
P Terminal	• Low-level ac • High-frequency • Switch-closure	• Counts • Frequency • Run average of frequency	**PulseCount()**
C Terminal	• Low-level ac with *LLAC4* (p. 622) module • High-frequency • Switch-closure	• Counts • Frequency • Running average of frequency	**PulseCount()** **TimerIO()**

Table 3. Pulse-Input Terminals and Measurements			
Pulse-Input Terminal	***Input Type***	***Data Option***	***CRBasic Instruction***
		• Interval • Period • State	

5.1.3.3 Pulse Sensor Wiring

Read More See the section *Pulse Measurement Tips* (p. 338)

An example of a pulse sensor connection is illustrated in figure *Pulse-Input Wiring Example — Anemometer Switch* (p. 70). Pulse sensors have two active wires, one of which is ground. Connect the ground wire to a ⏚ (signal ground) terminal. Connect the other wire to a **P** terminal. Sometimes the sensor will require power from the CR800, so there may be two power wires — one of which will be power ground. Connect power ground to a **G** terminal. Do not confuse the pulse wire with the positive-power wire, or damage to the sensor or CR800 may result. Some switch-closure sensors may require a pull-up resistor.

Figure 24. Pulse-Input Wiring Example — Anemometer

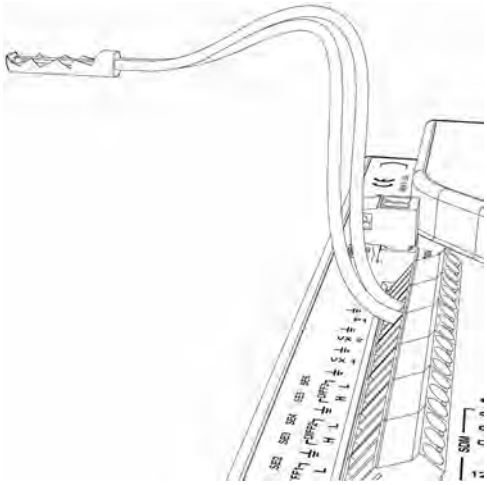

5.1.4 Period Averaging — Overview

Related Topics:
- Period Averaging — Specifications
- *Period Averaging — Overview* (p. 70)
- *Period Averaging — Details* (p. 341)

The CR800 can measure the period of an analog signal.

Numbered **SE** terminals are configurable for period average:

- Voltage gain: 1, 10, 33, 100
- Maximum frequency: 200 kHz

- Resolution: 136 ns

Note Both pulse-count and period-average measurements are used to measure frequency output sensors. Yet pulse-count and period-average measurement methods are different. Pulse-count measurements use dedicated hardware — pulse count accumulators, which are always monitoring the input signal, even when the CR800 is between program scans. In contrast, period-average measurement instructions only monitor the input signal during a program scan. Consequently, pulse-count scans can usually be much less frequent than period-average scans. Pulse counters may be more susceptible to low-frequency noise because they are always "listening", whereas period averaging may filter the noise by reason of being "asleep" most of the time. Pulse-count measurements are not appropriate for sensors that are powered off between scans, whereas period-average measurements work well since they can be placed in the scan to execute only when the sensor is powered and transmitting the signal.

Period-average measurements use a high-frequency digital clock to measure time differences between signal transitions, whereas pulse-count measurements simply accumulate the number of counts. As a result, period-average measurements offer much better frequency resolution per measurement interval, as compared to pulse-count measurements. The frequency resolution of pulse-count measurements can be improved by extending the measurement interval by increasing the scan interval and by averaging. For information on frequency resolution, see *Frequency Resolution* (p. 335).

5.1.5 Vibrating-Wire Measurements — Overview

Related Topics:
- Vibrating-Wire Measurements — Specifications
- *Vibrating-Wire Measurements — Overview* (p. 71)
- *Vibrating-Wire Measurements — Details* (p. 343)

Vibrating-wire sensors impart long term stability to many environmental and industrial measurement applications. The CR800 is equipped to measure these sensors either directly or through interface modules.

A thermistor included in most sensors can be measured to compensate for temperature errors.

Measuring the resonant frequency by means of period averaging is the classic technique, but Campbell Scientific has developed static and dynamic spectral-analysis techniques (*Vspect* (p. 506)*t*[m]) that produce superior noise rejection, higher resolution, diagnostic data, and, in the case of dynamic Vspect, measurements up to 333.3 Hz. Dynamic measurements require addition of an interface module.

SE terminals are configurable for time-domain vibrating-wire measurement, which is a technique now superseded in most applications by *Vspect* (p. 506) vibrating-wire analysis. See appendix *Vibrating-Wire Input Modules List* (p. 623) for more information.

5.1.6 Reading Smart Sensors — Overview

Related Topics:
- *Reading Smart Sensors — Overview* (p. 72)
- *Reading Smart Sensors — Details* (p. 344)

A smart sensor is equipped with independent measurement circuitry that makes the basic measurement and sends measurement and measurement related data to the CR800. Smart sensors vary widely in output modes. Many have multiple output options. Output options supported by the CR800 include *SDI-12* (p. 259), *RS-232* (p. 238), *Modbus* (p. 391), and *DNP3* (p. 387).

The following smart sensor types can be measured on the indicated terminals:

- SDI-12 devices: **C**
- Synchronous Devices for Measurement (SDM): **C**
- Smart sensors: **C** terminals, **RS-232** port, and **CS I/O** port with the appropriate interface.
- Modbus or DNP3 network: **RS-232** port and **CS I/O** port with the appropriate interface
- Other serial I/O devices: **C** terminals, **RS-232** port, and **CS I/O** port with the appropriate interface

5.1.6.1 SDI-12 Sensor Support — Overview

Related Topics:
- *SDI-12 Sensor Support — Overview* (p. 72)
- *SDI-12 Sensor Support — Details* (p. 344)
- *Serial I/O: SDI-12 Sensor Support — Programming Resource* (p. 259)
- *SDI-12 Sensor Support — Instructions* (p. 529)

SDI-12 is a smart-sensor protocol that uses one SDI-12 port and is powered by 12 Vdc. It is fully supported by the CR800 datalogger. Refer to the chart *CR800 Terminal Definitions* (p. 76), which indicates **C** terminals that can be configured for SDI-12 input. For more information about SDI-12 support, see section *Serial I/O: SDI-12 Sensor Support — Details* (p. 259).

5.1.6.2 RS-232 — Overview

The CR800 has 4 ports available for RS-232 input as shown in figure *Terminals Configurable for RS-232 Input* (p. 73).

Note With the correct adapter, the **CS I/O** port can often be used as an RS-232 I/O port.

As indicated in figure *Use of RS-232 and Digital I/O when Reading RS-232 Devices* (p. 73), RS-232 sensors can often be connected to **C** terminal pairs configured for serial I/O, to the **RS-232** port, or to the **CS I/O** port with the proper adapter. Ports can be set up for baud rate, parity, stop-bit, and so forth as described in *CRBasic Editor Help*.

Figure 25. Terminals Configurable for RS-232 Input

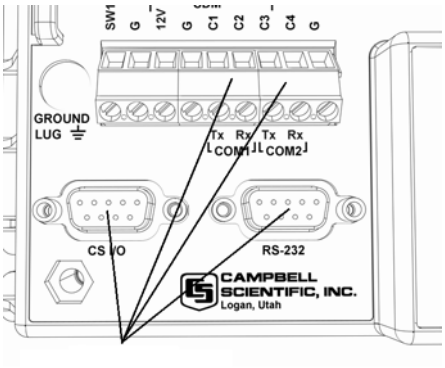

Figure 26. Use of RS-232 and Digital I/O when Reading RS-232 Devices

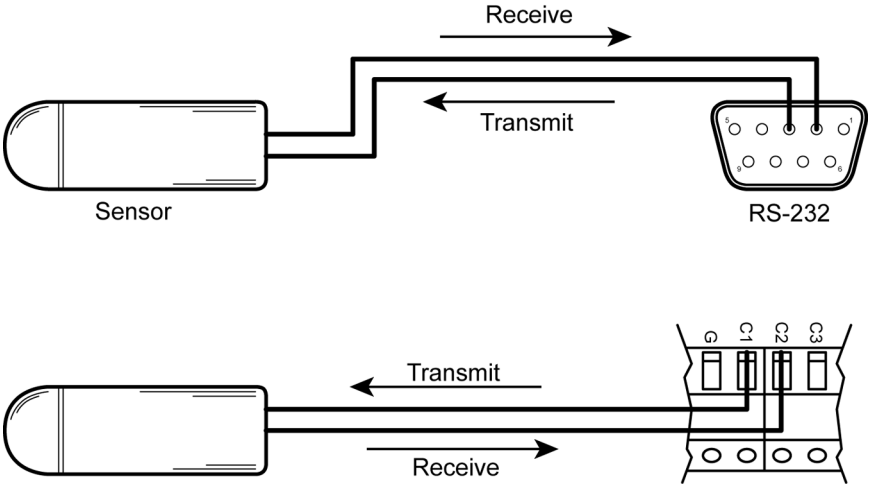

5.1.7 Field Calibration — Overview

Related Topics:
- *Field Calibration — Overview* (p. 73)
- *Field Calibration — Details* (p. 203)

Calibration increases accuracy of a measurement device by adjusting its output, or the measurement of its output, to match independently verified quantities. Adjusting sensor output directly is preferred, but not always possible or practical. By adding **FieldCal()** or **FieldCalStrain()** instructions to the CR800 CRBasic program, measurements of a linear sensor can be adjusted by modifying the programmed multiplier and offset applied to the measurement.

5.1.8 Cabling Effects — Overview

Related Topics:
- *Cabling Effects — Overview* (p. 73)
- *Cabling Effects — Details* (p. 345)

Sensor cabling can have significant effects on sensor response and accuracy. This is usually only a concern with sensors acquired from manufacturers other than

Campbell Scientific. Campbell Scientific sensors are engineered for optimal performance with factory-installed cables.

5.1.9 Synchronizing Measurements — Overview

Related Topics:
- *Synchronizing Measurements — Overview* (p. 74)
- *Synchronizing Measurements — Details* (p. 346)

Timing of a measurement is usually controlled relative to the CR800 clock. When sensors in a sensor network are measured by a single CR800, measurement times are synchronized, often within a few milliseconds, depending on sensor number and measurement type. Large numbers of sensors, cable length restrictions, or long distances between measurement sites may require use of multiple CR800s.

5.2 PLC Control — Overview

Related Topics:
- *PLC Control — Overview* (p. 74)
- *PLC Control — Details* (p. 237)
- *PLC Control Modules — Overview* (p. 349)
- *PLC Control Modules — Lists* (p. 624)
- *PLC Control — Instructions* (p. 536)
- Switched Voltage Output — Specifications
- *Switched Voltage Output — Overview* (p. 78)
- *Switched Voltage Output — Details* (p. 101)

This section is slated for expansion. Below are a few tips.

- Short Cut programming wizard has provisions for simple on/off control.
- PID control can be done with the CR800. Ask a Campbell Scientific application engineer for more information.
- When controlling a PID algorithm, a delay between processing (algorithm input) and the control (algorithm output) is not usually desirable. A delay will not occur in either *sequential mode* (p. 501) or *pipeline mode* (p. 497), assuming an appropriately fast scan interval is programmed, and the program is not skipping scans. In sequential mode, if some task occurs that pushes processing time outside the scan interval, skipped scans will occur and the PID control may fail. In pipeline mode, with an appropriately sized scan buffer, no skipped scans will occur. However, the PID control may fail as the processing instructions work through the scan buffer.
- To avoid these potential problems, bracket the processing instructions in the CRBasic program with **ProcHiPri** and **EndProcHiPri**. Processing instructions between these instructions are given the same high priority as measurement instructions and do not slip into the scan buffer if processing time is increased. ProcHiPri and EndProcHiPri may not be selectable in *CRBasic Editor*. You can type them in anyway, and the compiler will recognize them.

5.3 Datalogger — Overview

Related Topics:
- *Datalogger — Quickstart* (p. 43)
- *Datalogger — Overview* (p. 75)
- *Dataloggers — List* (p. 621)

The CR800 datalogger is the principal component of a data-acquisition system. It is a precision instrument designed for demanding environments and low-power applications. CPU, analog and digital measurements, analog and digital outputs, and memory usage are controlled by the operating system, the on-board clock, and the CRBasic application program you write.

The application program is written in CRBasic, a programming language that includes measurement, data processing, and analysis routines and a standard BASIC instruction set. *Short Cut* (p. 501), a very user-friendly program generator software application, can be used to write programs for many basic measurement and control applications. *CRBasic Editor*, a software application available in some *datalogger support software* (p. 485) packages, is used to write more complex programs.

Measurement data are stored in non-volatile memory. Most applications do not require that every measurement be recorded. Rather, measurements are usually combined in statistical or computational summaries. The CR800 has the option of evaluating programmed instructions sequentially (sequential mode), or in the more efficient pipeline mode. In pipeline mode, the CR800 determines the order of instruction execution.

5.3.1 Time Keeping — Overview

Related Topics:
- *Time Keeping — Overview* (p. 75)
- *Time Keeping — Instructions* (p. 552)

Nearly all CR800 functions depend on the internal clock. The operating system and the CRBasic user program use the clock for scheduling operations. The CRBasic program times functions through various instructions, but the method of timing is nearly always in the form of "time into an interval." For example, 6:00 AM is represented in CRBasic as "360 minutes into a 1440 minute interval", 1440 minutes being the length of a day and 360 minutes into that day corresponding to 6:00 AM.

Zero minutes into an interval puts it at the "top" of that interval, that is at the beginning of the second, minute, hours, or day. For example, 0 minutes into a 1440 minute interval corresponds to Midnight. When an interval of a week is programmed, the week begins at Midnight on Monday morning.

5.3.2 Wiring Panel — Overview

Related Topics
- *Wiring Panel — Quickstart* (p. 43)
- *Wiring Panel — Overview* (p. 75)
- *Measurement and Control Peripherals* (p. 348)

The wiring panel of the CR800 is the interface to most functions. These functions are introduced in the following sections while reviewing wiring-panel features illustrated in the figure *Wiring Panel* (p. 44). The table *CR800 Terminal Definitions* (p. 76) details the functions of the various terminals on the wiring panel. Measurement and control peripherals expand the input and output capabilities of the wiring panel.

Figure 27. Wiring Panel

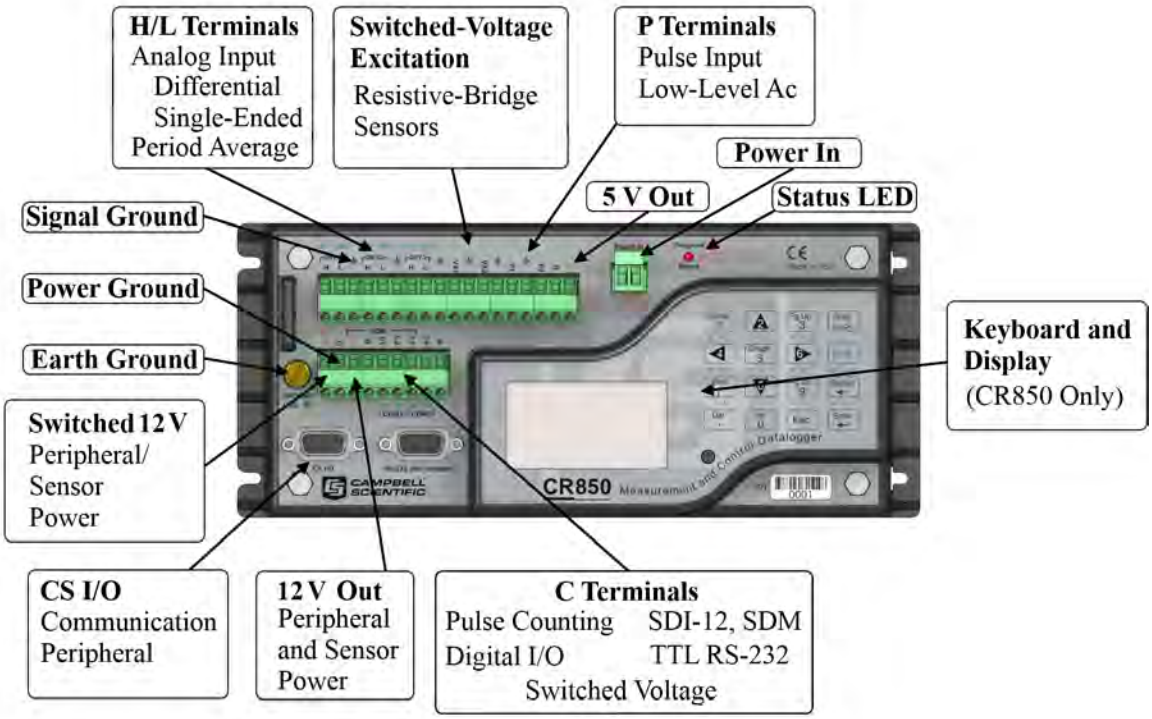

Table 4. CR800 Wiring Panel Terminal Definitions

Labels	SE	1	2	3	4	5	6					COM1		COM2							
	DIFF	┌1┐		┌2┐		┌3┐						Tx	Rx	Tx	Rx						
		H	L	H	L	H	L	VX1	VX2	P1	P2	C1	C2	C3	C4	5V	12V	SW12	RS-232	CS I/O	Max
Function	Analog Input																				
	Single-ended	✓	✓	✓	✓	✓	✓														6
	Differential (high/low)	✓		✓		✓															3
	Analog period average	✓	✓	✓	✓	✓	✓														6
	Vibrating wire[2]	✓	✓	✓	✓	✓	✓														6
	Analog Output																				
	Switched Precision Voltage							✓	✓												2
	Pulse Counting																				
	Switch closure									✓	✓	✓	✓	✓	✓						6
	High frequency									✓	✓	✓	✓	✓	✓						6
	Low-level Vac									✓	✓										2
	Digital I/O																				
	Control											✓	✓	✓	✓						4
	Status											✓	✓	✓	✓						4
	General I/O (TX,RX)											✓		✓							2
	Pulse-width modulation											✓	✓	✓	✓						4
	Timer I/O											✓	✓	✓	✓						4
	Interrupt											✓	✓	✓	✓						4
	Continuous Regulated[3]																				
	5 Vdc															✓					1
	Continuous Unregulated[3]																				
	12 Vdc																✓				1
	Switched Regulated[3]																				
	5 Vdc											✓	✓	✓	✓						4
	Switched Unregulated[3]																				
	12 Vdc																	✓			1
	UART																				
	True RS-232 (TX/RX)																		✓	✓[4]	2
	TTL RS-232 (TX/RX)											✓		✓							2
	SDI-12											✓		✓							4
	SDM (Data/Clock/Enable)											✓									1

[1] Terminal expansion modules are available. See section *Measurement and Control Peripherals — Overview* (p. 84).
[2] Static, time domain measurement. Obsolete. See section *Vibrating-Wire Measurements — Overview* (p. 71).
[3] Check the table *Current Source and Sink Limits* (p. 101).
[4] CS I/O requires an interfacing device for sensor input. See section *Data Retrieval and Telecommunication Peripherals — Lists* (p. 627).

5.3.2.1 Switched Voltage Output — Overview

Related Topics:
- Switched Voltage Output — Specifications
- *Switched Voltage Output — Overview* (p. 78)
- *Switched Voltage Output — Details* (p. 101)
- *PLC Control — Overview* (p. 74)
- *PLC Control — Details* (p. 237)
- *PLC Control Modules — Overview* (p. 349)
- *PLC Control Modules — Lists* (p. 624)
- *PLC Control — Instructions* (p. 536)

C terminals are selectable as binary inputs, control outputs, or communication ports. See the section *Measurement — Overview* (p. 62) for a summary of measurement functions. Other functions include device-driven interrupts, asynchronous communications and SDI-12 communications. Table *CR800 Terminal Definitions* (p. 76) summarizes available options.

Figure *Control and Monitoring with C Terminals* (p. 79) illustrates a simple application wherein a **C** terminal configured for digital input and another configured for control output are used to control a device (turn it on or off) and monitor the state of the device (whether the device is on or off).

*Figure 28. Control and Monitoring with **C** Terminals*

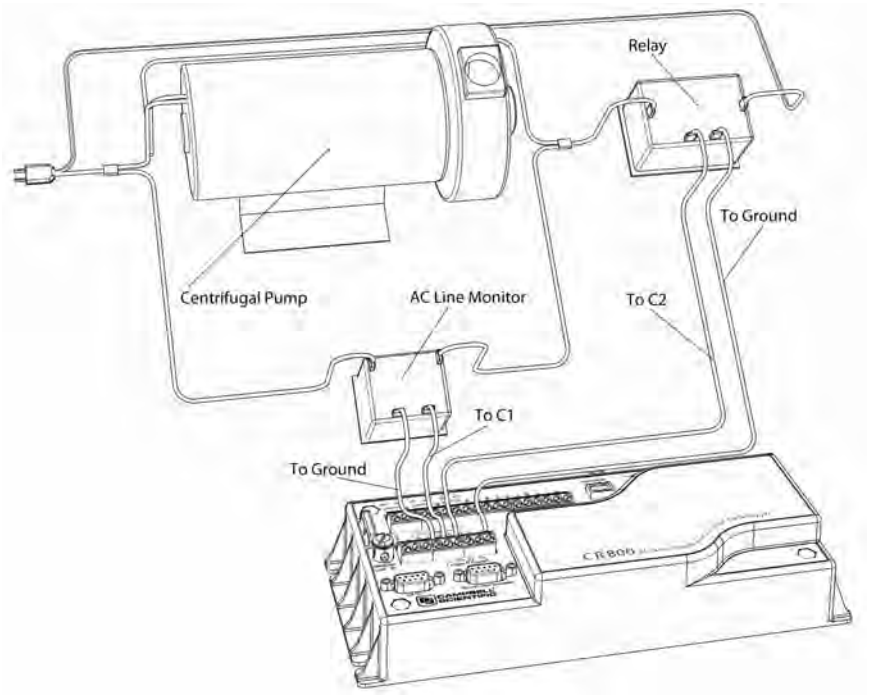

5.3.2.2 Voltage Excitation — Overview

Related Topics:
- Voltage and Current Excitation — Specifications
- *Voltage Excitation — Overview* (p. 79)

The CR800 has several terminals designed to supply switched voltage to peripherals, sensors, or control devices:

- Voltage Excitation (switched-analog output) — **Vx** terminals supply precise voltage in the range of ±2500 mV. These terminals are regularly used with resistive-bridge measurements. Each terminal will source up to ±25 mA.
-
- Digital I/O — **C** terminals configured for on / off and PWM (pulse width modulation) or PDM (pulse duration modulation) on **C4**.
- Switched 12 Vdc — **SW12** terminals. Primary battery voltage under program control to switch external devices (such as humidity sensors) requiring nominal 12 Vdc. **SW12** terminals can source up to 900 mA. See the table *Current Source and Sink Limits* (p. 101).
- Continuous Analog Output — available by adding a peripheral analog output device available from Campbell Scientific. Refer to section *Analog-Output Modules* (p. 349) for information on available expansion modules.

5.3.2.3 Grounding Terminals

Read More See *Grounding* (p. 103).

Proper grounding lends stability and protection to a data acquisition system. It is the easiest and least expensive insurance against data loss — and often the most neglected. The following terminals are provided for connection of sensor and CR800 datalogger grounds:

- Signal Ground (⏚) — reference for single-ended analog inputs, pulse inputs, excitation returns, and as a ground for sensor shield wires. Signal returns for pulse inputs should use ⏚ terminals located next to the pulse input terminal. Current loop sensors, however, should be grounded to power ground.
- Power Ground (**G**) — return for **5V**, **SW12**, **12V**, current loop sensors, and **C** configured for control. Use of **G** grounds for these outputs minimizes potentially large current flow through the analog-voltage-measurement section of the wiring panel, which can cause single-ended voltage measurement errors.
-
- Earth Ground Lug (⏚) — connection point for a heavy-gage earth-ground wire. A good earth connection is necessary to secure the ground potential of the CR800 and shunt transients away from electronics. Minimum 14 AWG wire is recommended.

5.3.2.4 Power Terminals

Related Topics:
- Power Supplies — Specifications
- *Power Supplies — Quickstart* *(p. 44)*
- *Power Supplies — Overview* *(p. 85)*
- *Power Supplies — Details* *(p. 98)*
- *Power Supplies — Products* *(p. 633)*
- *Power Sources* *(p. 99)*
- *Troubleshooting — Power Supplies* *(p. 469)*

5.3.2.4.1 Power In

The **POWER IN** connector is the connection point for external power supply components.

5.3.2.4.2 Power Out Terminals

Note Refer to the section *Switched Voltage Output — Details* *(p. 101)* for more information on using the CR800 as a power supply for sensors and peripheral devices.

The CR800 can be used as a power source for sensors and peripherals. The following voltages are available:

- **12V** terminals: unregulated nominal 12 Vdc. This supply closely tracks the primary CR800 supply voltage, so it may rise above or drop below the power requirement of the sensor or peripheral. Precautions should be taken to prevent damage to sensors or peripherals from over- or under-voltage conditions, and to minimize the error associated with the measurement of underpowered sensors. See section *Power Supplies — Overview* *(p. 85).*
- **5V** terminals: regulated 5 Vdc at 300 mA. The 5 Vdc supply is regulated to within a few millivolts of 5 Vdc so long as the main power supply for the

CR800 does not drop below <MinPwrSupplyVolts>.

5.3.2.5 Communication Ports

Read More See sections *RS-232 and TTL* (p. 344), *Data Retrieval and Telecommunications — Details* (p. 370), and *PakBus — Overview* (p. 88).

The CR800 is equipped with hardware ports that allow communication with other devices and networks, such as:

- PC
- Smart sensors
- Modbus and DNP3 networks
- Ethernet
- Modems
- Campbell Scientific PakBus networks
- Other Campbell Scientific dataloggers
- Campbell Scientific datalogger peripherals

Communication ports include:

- **CS I/O**
- **RS-232**
- SDI-12
- **SDM**
- CPI (requires a peripheral device)
- Ethernet (requires a peripheral device)

5.3.2.5.1 CS I/O Port

Read More See the appendix *Serial Port Pinouts* (p. 609).

- One nine-pin port, labeled **CS I/O**, for communicating with a PC or modem through Campbell Scientific communication interfaces, modems, or peripherals. CS I/O telecommunication interfaces are listed in the appendix *Serial I/O Modules List* (p. 622).

Note CS I/O communications normally operate well over only a few feet of serial cable.

5.3.2.5.2 RS-232 Ports

Note RS-232 communications normally operate well up to a transmission cable capacitance of 2500 picofarads, or approximately 50 feet of commonly available serial cable.

- One nine-pin DCE port, labeled **RS-232**, normally used to communicate with a PC running *datalogger support software* (p. 631), or to connect a third-party modem. With a null-modem adapter attached, it serves as a DTE device.

Read More See the appendix *Serial Port Pinouts* (p. 609).

- Two-terminal (TX and RX) RS-232 ports can be configured:
  - Up to Two TTL ports, configured from **C** terminals.

Note RS-232 ports are not *isolated* (p. 492).

5.3.2.5.3 SDI-12 Ports

Read More See the section *Serial I/O: SDI-12 Sensor Support — Details* (p. 259).

SDI-12 is a 1200 baud protocol that supports many smart sensors. Each port requires one terminal and supports up to 16 individually addressed sensors.

- Up to two ports configured from **C** terminals.

5.3.2.5.4 SDM Port

SDM is a protocol proprietary to Campbell Scientific that supports several Campbell Scientific digital sensor and telecommunication input and output expansion peripherals and select smart sensors.

- One SDM port configured from **C1**, **C2**, and **C3** terminals.

5.3.2.5.5 CPI Port

CPI is a new proprietary protocol that supports an expanding line of Campbell Scientific CDM modules. CDM modules are higher-speed input- and output-expansion peripherals. CPI ports also enable networking between compatible Campbell Scientific dataloggers.

- Connection to CDM devices requires a peripheral CPI interface as listed in the appendix *CDM/CPI Interfaces* (p. 623).

5.3.2.5.6 Ethernet Port

Read More See the section *TCP/IP* (p. 282).

- Ethernet capability requires a peripheral Ethernet interface device, as listed in the appendix *Network Links List* (p. 629).

5.3.3 Keyboard Display — Overview

Related Topics:
- *Keyboard Display — Overview* (p. 82)
- *Keyboard Display — Details* (p. 430)
- *Keyboard Display — List* (p. 627)
- *Custom Menus — Overview* (p. 83, p. 555)

The CR1000KD Keyboard Display is a powerful tool for field use. The CR1000KD, illustrated in figure *CR1000KD Keyboard Display* (p. 83), is a peripheral optional to the CR800.

The keyboard display is an essential installation, maintenance, and troubleshooting tool for many applications. It allows interrogation and programming of the CR800 datalogger independent of other telecommunication links. More information on the use of the keyboard display is available in the section *Custom Menus — Overview* (p. 83, p. 555). See the appendix *Keyboard Displays List* (p. 627) for more information on available products.

Figure 29. CR1000KD Keyboard Display

5.3.3.1 Integrated Keyboard Display

The integrated keyboard display, illustrated in figure *Wiring Panel* (p. 44), is a purchased option when buying a CR800 series datalogger.

5.3.3.2 Character Set

The keyboard display character set is accessed using one of the following three procedures:

- Most keys have a characters shown in blue printed above the key. To enter a character, press **Shift** one to three times to select the position of the character shown above the key, then press the key. For example, to enter **Y**, press **Shift** three times, then press the **PgDn**.
- To insert a space (**Spc**) or change case (**Cap**), press **Shift** one to two times for the position, then press **BkSpc**.
- To insert a character not printed on the keyboard, enter **Ins** , scroll down to **Character**, press **Enter**, then scroll up, down, left, or right to the desired character in the list, then press **Enter**.

5.3.3.3 Custom Menus — Overview

Related Topics:
- *Custom Menus — Overview* (p. 83, p. 555)
- *Data Displays: Custom Menus — Details* (p. 180)
- *Custom Menus — Instruction Set* (p. 555)
- *Keyboard Display — Overview* (p. 82)
- *CRBasic Editor Help* for **DisplayMenu()**

CRBasic programming in the CR800 facilitates creation of custom menus for the CR1000KD Keyboard Display.

Figure *Custom Menu Example* (p. 84) shows windows from a simple custom menu named **DataView**. **DataView** appears as the main menu on the keyboard display. **DataView** has menu item **Counter**, and submenus **PanelTemps**, **TCTemps** and

System Menu. **Counter** allows selection of one of four values. Each submenu displays two values from CR800 memory. **PanelTemps** shows the CR800 wiring-panel temperature at each scan, and the one-minute sample of panel temperature. **TCTemps** displays two thermocouple temperatures. For more information on creating custom menus, see section *Data Displays: Custom Menus — Details* (p. 180).

Figure 30. Custom Menu Example

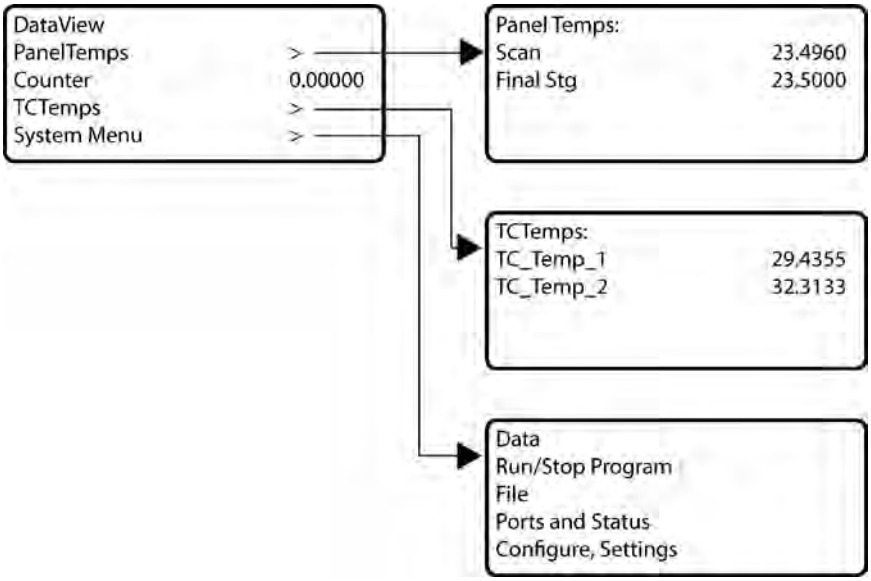

5.3.4 Measurement and Control Peripherals — Overview

Related Topics:
- *Measurement and Control Peripherals — Overview* (p. 84)
- *Measurement and Control Peripherals — Details* (p. 348)
- *Measurement and Control Peripherals — Lists* (p. 622)

Modules are available from Campbell Scientific to expand the number of terminals on the CR800. These include:

Multiplexers

Multiplexers increase the input capacity of terminals configured for analog-input, and the output capacity of Vx excitation terminals.

SDM Devices

Serial **D**evice for **M**easurement expand the input and output capacity of the CR800. These devices connect to the CR800 through terminals **C1**, **C2**, and **C3**.

CDM Devices

Campbell **D**istributed **M**odules are a growing line of measurement and control modules that use the higher speed CAN Peripheral Interface (CPI) bus technology. These connect through the SC-CPI interface.

5.3.5 Power Supplies — Overview

Related Topics:
- Power Supplies — Specifications
- *Power Supplies — Quickstart* (p. 44)
- *Power Supplies — Overview* (p. 85)
- *Power Supplies — Details* (p. 98)
- *Power Supplies — Products* (p. 633)
- *Power Sources* (p. 99)
- *Troubleshooting — Power Supplies* (p. 469)

The CR800 is powered by a nominal 12 Vdc source. Acceptable power range is 9.6 to 16 Vdc.

External power connects through the green **POWER IN** connector on the face of the CR800. The positive power lead connects to **12V**. The negative lead connects to **G**. The connection is internally reverse-polarity protected.

The CR800 is internally protected against accidental polarity reversal on the power inputs.

The CR800 has a modest-input power requirement. For example, in low-power applications, it can operate for several months on non-rechargeable batteries. Power systems for longer-term remote applications typically consist of a charging source, a charge controller, and a rechargeable battery. When ac line power is available, a Vac-to-Vac or Vac-to-Vdc wall adapter, a peripheral charging regulator, and a rechargeable battery can be used to construct a UPS (un-interruptible power supply).

5.3.6 CR800 Configuration — Overview

Related Topics:
- *CR800 Configuration — Overview* (p. 85)
- *CR800 Configuration — Details* (p. 109)
- *Status, Settings, and Data Table Information (Status/Settings/DTI)* (p. 577)

The CR800 is shipped factory-ready with an operating system (OS) installed. Settings default to those necessary to communicate with a PC via **RS-232** and to accept and execute user-application programs. For more complex applications, some settings may need adjustment. Settings can be changed with the following:

- *DevConfig* (*Device Configuration Utility).* See section *Device Configuration Utility* (p. 109))
- CR1000KD Keyboard Display. See section *Keyboard Display — Details* (p. 430) and the appendix *Keyboard Display — List* (p. 627)
- Datalogger support software. See section *Datalogger Support Software — Overview* (p. 93).

OS files are sent to the CR800 with *DevConfig* or through the program **Send** button in datalogger support software. When the OS is sent with *DevConfig*, most settings are cleared, whereas, when sent with datalogger support software, most settings are retained. Operating systems can also be transferred to the CR800 with a Campbell Scientific mass storage device.

OS updates are occasionally made available at *www.campbellsci.com*. OS and settings remain intact when power is cycled.

5.3.7 CRBasic Programming — Overview

Related Topics:
- *CRBasic Programming — Overview* (p. 86)
- *CRBasic Programming — Details* (p. 120)
- *CRBasic Programming — Instructions* (p. 511)
- *Programming Resource Library* (p. 167)
- *CRBasic Editor Help*

A CRBasic program directs the CR800 how and when sensors are to be measured, calculations made, and data stored. A program is created on a PC and sent to the CR800. The CR800 can store a number of programs in memory, but only one program is active at a given time. Two Campbell Scientific software applications, *Short Cut* and *CRBasic Editor*, are used to create CR800 programs.

- *Short Cut* creates a datalogger program and wiring diagram in four easy steps. It supports most sensors sold by Campbell Scientific and is recommended for creating simple programs to measure sensors and store data.
- Programs generated by *Short Cut* are easily imported into *CRBasic Editor* for additional editing. For complex applications, experienced programmers often create essential measurement and data storage code with *Short Cut*, then add more complex code with *CRBasic Editor*.

Note Once a *Short Cut* generated program has been edited with *CRBasic Editor* (p. 123), it can no longer be modified with *Short Cut*.

5.3.8 Memory — Overview

Related Topics:
- *Memory — Overview* (p. 86)
- *Memory — Details* (p. 351)
- *Data Storage Devices — List* (p. 629)

Data concerning CR800 memory are posted in the **Status** (p. 577) table. Memory is organized as follows:

- OS Flash
  - 2 MB
  - Operating system (OS)
  - Serial number and board rev
  - Boot code
  - Erased when loading new OS (boot code only erased if changed)
- Serial Flash
  - 512 KB
  - Device settings
  - Write protected
  - Non-volatile

- CPU: drive residence
  - Automatically allocated
  - FAT file system
  - Limited write cycles (100,000)
  - Slow (serial accesses)

- Main Memory
  - 4 MB SRAM
  - Battery backed
  - OS variables
  - CRBasic compiled program binary structure (490 KB maximum)
  - CRBasic variables
  - Data memory
  - Communication memory
  - USR: drive
    - User allocated
    - FAT32 RAM drive
    - Photographic images (See the appendix Cameras)
    - Data files from **TableFile()** instruction (TOA5, TOB1, CSIXML and CSIJSON)
  - *Keep* (p. 492) memory (OS variables not initialized)
  - Dynamic runtime memory allocation

Note CR800s with serial numbers smaller than 3605 were usually supplied with only 2 MB of SRAM.

Memory for data can be increased with the addition of a mass storage device (thumb drive) that connects to **CS I/O**. See the appendix *Data-Storage Devices — List* (p. 629) for information on available memory expansion products.

By default, final-data memory (memory for stored data) is organized as ring memory. When the ring is full, oldest data are overwritten by newest data. The **DataTable()** instruction, however, has an option to set a data table to ***Fill and Stop***.

5.3.9 Data Retrieval and Telecommunications — Overview

Related Topics:
- *Data Retrieval and Telecommunications — Quickstart* (p. 45)
- *Data Retrieval and Telecommunications — Overview* (p. 87)
- *Data Retrieval and Telecommunications — Details* (p. 370)
- *Data Retrieval and Telecommunication Peripherals — Lists* (p. 627)

Final data are written to tables in final-data memory. When retreived, data are copied to PC files via a telecommunication link (*Data Retrieval and Telecommunications — Details* (p. 370)) or by transporting a or a Campbell Scientific mass storage media (USB: drive) to the PC.

5.3.9.1 PakBus® Communications — Overview

Related Topics:
- *PakBus® Communications — Overview* (p. 88)
- *PakBus® Communications — Details* (p. 372)
- *PakBus® Communications — Instructions* (p. 558)
- *PakBus Networking Guide* (available at *www.campbellsci.com/manuals* (*http://www.campbellsci.com/manuals*))

The CR800 communicates with *datalogger support software* (p. 630), *telecommunication peripherals* (p. 627), and other *dataloggers* (p. 621) with PakBus, a proprietary network communication protocol. PakBus is a protocol similar in concept to IP (Internet Protocol). By using signatured data packets, PakBus increases the number of communication and networking options available to the CR800. Communication can occur via TCP/IP, on the **RS-232** port, **CS I/O** port, and **C** terminals.

Advantages of PakBus are as follows:

- Simultaneous communication between the CR800 and other devices.
- Peer-to-peer communication — no PC required. Special CRBasic instructions simplify transferring data between dataloggers for distributed decision making or control.
- Data consolidation — other PakBus dataloggers can be used as "sensors" to consolidate all data into one CR800.
- Routing — the CR800 can act as a router, passing on messages intended for another Campbell Scientific datalogger. PakBus supports automatic route detection and selection.
- Short distance networks — with no extra hardware, a CR800 can talk to another CR800 over distances up to 30 feet by connecting transmit, receive and ground wires between the dataloggers.

In a PakBus network, each datalogger is set to a unique address. The default PakBus address in most devices is 1. To communicate with the CR800, the datalogger support software must know the CR800 PakBus address. The PakBus address is changed using the *CR1000KD Keyboard Display* (p. 430), *DevConfig utility* (p. 109), CR800 **Status** *table* (p. 577), or *PakBus Graph* (p. 496) software.

5.3.9.2 Telecommunications

Data are usually copied through a telecommunication link to a file on the supporting PC using Campbell Scientific *datalogger support software* (p. 631). See also the manual and *Help* for the software being used.

5.3.9.3 Mass-Storage Device

Caution When removing a Campbell Scientific mass storage device (thumb drive) from the CR800, do so only when the LED is not lit or flashing. Removing the device while it is active can cause data corruption.

Data stored on a Campbell Scientific mass storage device are retrieved via a telecommunication link to the CR800, if the device remains on the **CS I/O** port, or by removing the device, connecting it to a PC, and copying files using

Windows File Explorer.

5.3.9.4 Data-File Formats in CR800 Memory

Routine CR800 operations store data in binary data tables. However, when the **TableFile()** instruction is used, data are also stored in one of several formats in discrete text files in internal or external memory. See *Data Storage — On-board* (p. 355) for more information on the use of the **TableFile()** instruction.

5.3.9.5 Data Format on Computer

CR800 data stored on a PC with *datalogger support software* (p. 631) are formatted as either ASCII or binary depending on the file type selected in the support software. Consult the software manual for details on available data-file formats.

5.3.10 Alternate Telecommunications — Overview

Related Topics:
- *Alternate Telecommunications — Overview* (p. 89)
- *Alternate Telecommunications — Details* (p. 386)

The CR800 communicates with external devices to receive programs, send data, or act in concert with a network. The primary communication protocol is *PakBus* (p. 496). Other telecommunication protocols are supported, including *Web API* (p. 402), *Modbus* (p. 391), and *DNP3* (p. 387). Refer to the section *Specifications* (p. 95) for a complete list of supported protocols. The appendix *Data Retrieval and Telecommunications — Peripherals Lists* (p. 627) lists peripheral communication devices available from Campbell Scientific.

Keyboard displays also communicate with the CR800. See *Keyboard Display — Overview* (p. 82) for more information.

5.3.10.1 Modbus

Related Topics:
- *Modbus — Overview* (p. 89)
- *Modbus — Details* (p. 391)

The CR800 supports Modbus master and Modbus slave communications for inclusion in Modbus SCADA networks. Modbus is a widely used SCADA communication protocol that facilitates exchange of information and data between computers / HMI software, instruments (RTUs) and Modbus-compatible sensors. The CR800 communicates with Modbus over RS-232, RS-485 (with a RS-232 to RS-485 adapter), and TCP.

Modbus systems consist of a master (PC), RTU / PLC slaves, field instruments (sensors), and the communication-network hardware. The communication port, baud rate, data bits, stop bits, and parity are set in the Modbus driver of the master and / or the slaves. The Modbus standard has two communication modes, RTU and ASCII. However, CR800s communicate in RTU mode exclusively.

Field instruments can be queried by the CR800. Because Modbus has a set command structure, programming the CR800 to get data from field instruments is much simpler than from serial sensors. Because Modbus uses a common bus and

addresses each node, field instruments are effectively multiplexed to a CR800 without additional hardware.

5.3.10.2 DNP3 — Overview

Related Topics:
- *DNP3 — Overview* (p. 90)
- *DNP3 — Details* (p. 387)

The CR800 supports DNP3 slave communications for inclusion in DNP3 SCADA networks.

5.3.10.3 TCP/IP — Overview

Related Topics:
- *TCP/IP — Overview* (p. 90)
- *TCP/IP — Details* (p. 402)
- *TCP/IP — Instructions* (p. 567)
- *TCP/IP Links — List* (p. 629)

The CR800 supports the following TCP/IP protocols:

- DHCP
- DNS
- FTP
- HTML
- HTTP
- Micro-serial server
- NTCIP
- NTP
- PakBus over TCP/IP
- Ping
- POP3
- SMTP
- SNMP
- Telnet
- Web API
- XML

5.3.11 Security — Overview

Related Topics:
- *Security — Overview* (p. 90)
- *Security — Details* (p. 443)

The CR800 is supplied void of active security measures. By default, RS-232, Telnet, FTP and HTTP services, all of which give high level access to CR800 data and CRBasic programs, are enabled without password protection.

You may wish to secure your CR800 from mistakes or tampering. The following may be reasons to concern yourself with datalogger security:

- Collection of sensitive data

- Operation of critical systems
- Networks accessible by many individuals

If you are concerned about security, especially TCP/IP threats, you should send the latest *operating system* (p. 85) to the CR800, disable un-used services, and secure those that are used. Security actions to take may include the following:

- Set passcode lockouts
- Set PakBus/TCP password
- Set FTP username and password
- Set AES-128 PakBus encryption key
- Set .csipasswd file for securing HTTP and web API
- Track signatures
- Encrypt program files if they contain sensitive information
- Hide program files for extra protection
- Secure the physical CR800 and power supply under lock and key

Note All security features can be subverted through physical access to the CR800. If absolute security is a requirement, the physical CR800 must be kept in a secure location.

Related Topics
- *Auto Calibration — Overview* (p. 91)
- *Auto Calibration — Details* (p. 326)
- *Auto-Calibration — Errors* (p. 466)
- *Offset Voltage Compensation* (p. 315)
- *Factory Calibration* (p. 92)
- *Factory Calibration or Repair Procedure* (p. 452)

The CR800 auto-calibrates to compensate for changes caused by changing operating temperatures and aging. With auto-calibration disabled, measurement accuracy over the operational temperature range is specified as less accurate by a factor of 10. That is, over the extended temperature range of –40 °C to 85 °C, the accuracy specification of ±0.12% of reading can degrade to ±1% of reading with auto-calibration disabled. If the temperature of the CR800 remains the same, there is little calibration drift if auto-calibration is disabled. Auto-calibration can become disabled when the scan rate is too small. It can be disabled by the CRBasic program when using the **Calibrate()** instruction.

Note The CR800 is equipped with an internal voltage reference used for calibration. The voltage reference should be periodically checked and re-calibrated by Campbell Scientific for applications with critical analog voltage measurement requirements. A minimum two-year recalibration cycle is recommended.

Unless a **Calibrate()** instruction is present, the CR800 automatically auto-calibrates during spare time in the background as an automatic *slow sequence* (p. 155) with a segment of the calibration occurring every four seconds. If there is insufficient time to do the background calibration because of a scan-consuming user program, the CR800 will display the following warning at compile time: **Warning: Background calibration is disabled**.

5.3.12 Maintenance — Overview

Related Topics:
- *Maintenance — Overview* (p. 92)
- *Maintenance — Details* (p. 449)

With reasonable care, the CR800 should give many years of reliable service.

5.3.12.1 Protection from Moisture — Overview

Protection from Moisture — Overview (p. 92)
Protection from Moisture — Details (p. 97)
Protection from Moisture — Products (p. 636)

The CR800 and most of its peripherals must be protected from moisture. Moisture in the electronics will seriously damage, and probably render un-repairable, the CR800. Water can come from flooding or sprinkler irrigation, but most often comes as condensation. In most cases, protection from water is easily accomplished by placing the CR800 in a weather-tight enclosure with desiccant and elevating the enclosure above the ground. The CR800 is shipped with internal desiccant packs to reduce humidity. Desiccant in enclosures should be changed periodically.

Note Do not completely seal the enclosure if lead-acid batteries are present; hydrogen gas generated by the batteries may build up to an explosive concentration.

Refer to *Enclosures List* (p. 635) for information on available weather-tight enclosures.

5.3.12.2 Protection from Voltage Transients

Read More See *Grounding* (p. 103).

The CR800 must be grounded to minimize the risk of damage by voltage transients associated with power surges and lightning-induced transients. Earth grounding is required to form a complete circuit for voltage-clamping devices internal to the CR800. Refer to the appendix *Transient-Voltage Suppressors List* (p. 624) for information on available surge-protection devices.

5.3.12.3 Factory Calibration

Related Topics
- *Auto Calibration — Overview* (p. 91)
- *Auto Calibration — Details* (p. 326)
- *Auto-Calibration — Errors* (p. 466)
- *Offset Voltage Compensation* (p. 315)
- *Factory Calibration* (p. 92)
- *Factory Calibration or Repair Procedure* (p. 452)

The CR800 uses an internal voltage reference to routinely calibrate itself. Campbell Scientific recommends factory recalibration every two years. If calibration services are required, refer to the section entitled *Assistance* (p. 5) at the

front of this manual.

5.3.12.4 Internal Battery — Details

Related Topics:
- *Internal Battery — Quickstart* (p. 45)
- *Internal Battery — Details* (p. 93)

Warning Misuse or improper installation of the internal lithium battery can cause severe injury. Fire, explosion, and severe burns can result. Do not recharge, disassemble, heat above 100 °C (212 °F), solder directly to the cell, incinerate, or expose contents to water. Dispose of spent lithium batteries properly.

The CR800 contains a lithium battery that operates the clock and powers SRAM when the CR800 is not externally powered. In a CR800 stored at room temperature, the lithium battery should last approximately three years (less at temperature extremes). If the CR800 is continuously powered, the lithium cell should last much longer. Internal lithium battery voltage can be monitored from the CR800 **Status** table. Operating range of the battery is approximately 2.7 to 3.6 Vdc. Replace the battery as directed in *Replacing the Internal Battery* (p. 449) when the voltage is below 2.7 Vdc.

The lithium battery is not rechargeable. Its design is one of the safest available and uses lithium thionyl chloride technology. Maximum discharge current is limited to a few mA. It is protected from discharging excessive current to the internal circuits (there is no direct path outside) with a 100 ohm resistor. The design is UL listed. See:

http://www.tadiran-batterie.de/download/eng/LBR06Eng.pdf.

The battery is rated from -55 °C up to 85 °C.

5.4 Datalogger Support Software — Overview

Reading List:
- *Datalogger Support Software — Quickstart* (p. 46)
- *Datalogger Support Software — Overview* (p. 93)
- *Datalogger Support Software — Details* (p. 429)
- *Datalogger Support Software — Lists* (p. 630)

Datalogger support software are PC or Linux software available from Campbell Scientific that facilitate communication between the computer and the CR800. A wide array of software are available, but most of the heavy lifting gets done by the following:

- *Short Cut* Program Generator for Windows (SCWin) — *Short Cut* is used to write simple CRBasic programs without the need to learn the CRBasic programming language. *Short Cut* is an easy-to-use wizard that steps you through the program building process.
- *PC200W* Datalogger Starter Software for Windows — Supports only direct serial connection to the CR800 with hardwire or spread-spectrum radio. It supports sending a CRBasic program, data collection, and setting the CR800 clock. *PC200W* is available at no charge at *www.campbellsci.com/downloads* (*http://www.campbellsci.com/downloads*).

- *LoggerLink Mobile Apps* — Simple tool that allows an iOS or Android device to communicate with IP-enabled CR800s. It includes most *PC200W* functionality.
- *PC400* Datalogger Support Software — Includes *PC200W* functions, *CRBasic Editor*, and supports all telecommunication modes (except satellite) in attended mode.
- *LoggerNet* Datalogger Support Software — Includes all *PC400* functions and supports all telecommunication options (except satellite) in unattended mode. It also includes many enhancements such as graphical data displays.

Note More information about software available from Campbell Scientific can be found at *www.campbellsci.com http://www.campbellsci.com*. Please consult with a Campbell Scientific application engineer for a software recommendation to fit a specific application.

6. Specifications

CR800 specifications are valid from –25° to 50°C in non-condensing environments unless otherwise specified. Recalibration is recommended every two years. Critical specifications and system configurations should be confirmed with a Campbell Scientific application engineer before purchase.

PROGRAM EXECUTION RATE
10 ms to one day at 10 ms increments

ANALOG INPUTS (SE 1–6, DIFF 1–3)
Three differential (DIFF) or six single-ended (SE) individually configured input channels. Channel expansion provided by optional analog multiplexers.
RANGES and RESOLUTION: With reference to the following table, basic resolution (Basic Res) is the resolution of a single *A/D* *(p. 481)* conversion. A DIFF measurement with input reversal has better (finer) resolution by twice than Basic Res.

Range (mV)[1]	DIFF Res (µV)[2]	Basic Res (µV)
±5000	667	1333
±2500	333	667
±250	33.3	66.7
±25	3.33	6.7
±7.5	1.0	2.0
±2.5	0.33	0.67

[1]Range overhead of ≈9% on all ranges guarantees full-scale voltage will not cause over-range.
[2]Resolution of DIFF measurements with input reversal.

ANALOG INPUT ACCURACY[3]:
±(0.06% of reading + offset[3]), 0° to 40°C
±(0.12% of reading + offset[3]), -25° to 50°C
±(0.18% of reading + offset[3]), -55° to 85°C (-XT only)
[3]Accuracy does not include sensor and measurement noise.
Offset definitions:
Offset = 1.5 x Basic Res + 1.0 µV (for DIFF measurement w/ input reversal)
Offset = 3 x Basic Res + 2.0 µV (for DIFF measurement w/o input reversal)
Offset = 3 x Basic Res + 3.0 µV (for SE measurement)
ANALOG MEASUREMENT SPEED:

Integration Type Code	Integration Time	Settling Time	---Total Time[4]--- SE with no Rev	DIFF with Input Rev
250	250 µs	450 µs	≈1 ms	≈12 ms
_60Hz[5]	16.67 ms	3 ms	≈20 ms	≈40 ms
_50Hz[5]	20.00 ms	3 ms	≈25 ms	≈50 ms

[4]Includes 250 µs for conversion to engineering units.
[5]AC line noise filter

INPUT-NOISE VOLTAGE: For DIFF measurements with input reversal on ±2.5 mV input range (digital resolution dominates for higher ranges):
250 µs Integration: 0.34 µV RMS
50/60 Hz Integration: 0.19 µV RMS
INPUT LIMITS: ±5 Vdc
DC COMMON-MODE REJECTION: >100 dB
NORMAL-MODE REJECTION: 70 dB @ 60 Hz when using 60 Hz rejection
INPUT VOLTAGE RANGE W/O MEASUREMENT CORRUPTION: ±8.6 Vdc max.
SUSTAINED-INPUT VOLTAGE W/O DAMAGE: ±16 Vdc max
INPUT CURRENT: ±1 nA typical, ±6 nA max. @ 50°C; ±90 nA @ 85°C
INPUT RESISTANCE: 20 GΩ typical
ACCURACY OF BUILT-IN REFERENCE JUNCTION THERMISTOR (for thermocouple measurements):
±0.3°C, -25° to 50°C
±0.8°C, -55° to 85°C (-XT only)

ANALOG OUTPUTS (VX 1–2)
Two switched voltage outputs sequentially active only during measurement.
RANGES AND RESOLUTION:

Channel	Range	Resolution	Current Source / Sink
(VX 1–2)	±2.5 Vdc	0.67 mV	±25 mA

ANALOG OUTPUT ACCURACY (VX):
±(0.06% of setting + 0.8 mV, 0° to 40°C
±(0.12% of setting + 0.8 mV, -25° to 50°C
±(0.18% of setting + 0.8 mV, -55° to 85°C (-XT only)
VX FREQUENCY SWEEP FUNCTION: Switched outputs provide a programmable swept frequency, 0 to 2500 mV square waves for exciting vibrating wire transducers.

PERIOD AVERAGE
Any of the 6 SE analog inputs can be used for period averaging. Accuracy is ±(0.01% of reading + resolution), where resolution is 136 ns divided by the specified number of cycles to be measured.
INPUT AMPLITUDE AND FREQUENCY:

Voltage Gain	Range Code	Input Signal Peak-Peak Min mV[6]	Max V[7]	Min Pulse Width µs	Max Freq kHz[8]
1	mV250	500	10	2.5	200
10	mV25	10	2	10	50
33	mV7_5	5	2	62	8
100	mV2_5	2	2	100	5

[6]Signal to be centered around *Threshold* (see **PeriodAvg()** instruction).
[7]Signal to be centered around ground.
[8]The maximum frequency = 1/(twice minimum pulse width) for 50% of duty cycle signals.

RATIOMETRIC MEASUREMENTS
MEASUREMENT TYPES: The CR800 provides ratiometric resistance measurements using voltage excitation. Three switched voltage excitation outputs are available for measurement of four- and six-wire full bridges, and two-, three-, and four-wire half bridges. Optional excitation polarity reversal minimizes dc errors.
RATIOMETRIC MEASUREMENT ACCURACY[9,11]
Note Important assumptions outlined in footnote 9:
±(0.04% of Voltage Measurement + Offset[12])
[9]Accuracy specification assumes excitation reversal for excitation voltages < 1000 mV. Assumption does not include bridge resistor errors and sensor and measurement noise.
[11]Estimated accuracy, ΔX (where X is value returned from measurement with **Multiplier** =1, **Offset** = 0):
BRHalf() Instruction: $\Delta X = \Delta V_1/V_X$.
BRFull() Instruction: $\Delta X = 1000 \times \Delta V_1/V_X$, expressed as $mV \bullet V^{-1}$.
Note ΔV_1 is calculated from the ratiometric measurement accuracy. See manual section *Resistance Measurements* *(p. 319)* for more information.
[12]Offset definitions:
Offset = 1.5 x Basic Res + 1.0 µV (for DIFF measurement w/ input reversal)
Offset = 3 x Basic Res + 2.0 µV (for DIFF measurement w/o input reversal)
Offset = 3 x Basic Res + 3.0 µV (for SE measurement)
Note Excitation reversal reduces offsets by a factor of two.

PULSE COUNTERS (P 1–2)
Two inputs individually selectable for switch closure, high-frequency pulse, or low-level ac. Independent 24-bit counters for each input.
MAXIMUM COUNTS PER SCAN: 16.7 x 10^6
SWITCH-CLOSURE MODE:
Minimum Switch Closed Time: 5 ms
Minimum Switch Open Time: 6 ms
Max. Bounce Time: 1 ms open without being counted
HIGH-FREQUENCY PULSE MODE:
Maximum-Input Frequency: 250 kHz
Maximum-Input Voltage: ±20 V
Voltage Thresholds: Count upon transition from below 0.9 V to above 2.2 V after input filter with 1.2 µs time constant.
LOW-LEVEL AC MODE: Internal ac coupling removes dc offsets up to ±0.5 Vdc.
Input Hysteresis: 12 mV RMS @ 1 Hz
Maximum ac-Input Voltage: ±20 V
Minimum ac-Input Voltage:

Sine wave (mV RMS)	Range (Hz)
20	1.0 to 20
200	0.5 to 200
2000	0.3 to 10,000
5000	0.3 to 20,000

DIGITAL I/O PORTS (C 1–4)
Four ports software selectable as binary inputs or control outputs. Provide on/off, pulse width modulation, edge timing, subroutine interrupts / wake up, switch-closure pulse counting, high-frequency pulse counting, asynchronous communications (UARTs), and SDI-12 communications. SDM communications are also supported.

DIGITAL I/O PORTS (C 1–4)
Four ports software selectable as binary inputs or control outputs. Provide on/off, pulse width modulation, edge timing, subroutine interrupts / wake up, switch-closure pulse counting, high-frequency pulse counting, asynchronous communications (UARTs), and SDI-12 communications. SDM communications are also supported.
LOW FREQUENCY MODE MAX: <1 kHz
HIGH FREQUENCY MODE MAX: 400 kHz
SWITCH-CLOSURE FREQUENCY MAX: 150 Hz
EDGE-TIMING RESOLUTION: 540 ns
OUTPUT VOLTAGES (no load): high 5.0 V ±0.1 V; low < 0.1 V
OUTPUT RESISTANCE: 330 Ω
INPUT STATE: high 3.8 to 16 V; low -8.0 to 1.2 V
INPUT HYSTERISIS: 1.4 V
INPUT RESISTANCE:
100 kΩ with inputs < 6.2 Vdc
220 Ω with inputs ≥ 6.2 Vdc
SERIAL DEVICE / RS-232 SUPPORT: 0 to 5 Vdc UART

SWITCHED 12 Vdc (SW12)
One independent 12 Vdc unregulated terminal switched on and off under program control. Thermal fuse hold current = 900 mA at 20°C, 650 mA at 50°C, and 360 mA at 85°C.

CE COMPLIANCE
STANDARD(S) TO WHICH CONFORMITY IS DECLARED:
IEC61326:2002

COMMUNICATION
RS-232 PORTS:
DCE nine-pin: (not electrically isolated) for computer connection or connection of modems not manufactured by Campbell Scientific.
COM1 to COM2: two independent Tx/Rx pairs on control ports (non-isolated); 0 to 5 Vdc UART
Baud Rate: selectable from 300 bps to 115.2 kbps.
Default Format: eight data bits; one stop bits; no parity.
Optional Formats: seven data bits; two stop bits; odd, even parity.
CS I/O PORT: Interface with telecommunication peripherals manufactured by Campbell Scientific.
SDI-12: Digital control ports C1, C3 are individually configurable and meet SDI-12 Standard v. 1.3 for datalogger mode. Up to ten SDI-12 sensors are supported per port.

PROTOCOLS SUPPORTED: PakBus, AES-128 Encrypted PakBus, Modbus, DNP3, FTP, HTTP, XML, HTML, POP3, SMTP, Telnet, NTCIP, NTP, web API, SDI-12, SDM.

SYSTEM
PROCESSOR: Renesas H8S 2322 (16-bit CPU with 32-bit internal core running at 7.3 MHz)
MEMORY: 2 MB of flash for operating system; 4 MB of battery-backed SRAM for CPU, CRBasic programs, and data.
REAL-TIME CLOCK ACCURACY: ±3 min. per year. Correction via GPS optional.
RTC CLOCK RESOLUTION: 10 ms

SYSTEM POWER REQUIREMENTS
VOLTAGE: 9.6 to 16 Vdc
INTERNAL BATTERY: 1200 mAhr lithium battery for clock and SRAM backup. Typically provides three years of back-up.

EXTERNAL BATTERIES: Optional 12 Vdc nominal alkaline and rechargeable available. Power connection is reverse polarity protected.
TYPICAL CURRENT DRAIN at 12 Vdc:
Sleep Mode: 0.7 mA typical; 0.9 mA maximum
1 Hz Sample Rate (one fast SE meas.) mA
100 Hz Sample Rate (one fast SE meas.): 16 mA
100 Hz Sample Rate (one fast SE meas. with RS-232 communications): 28 mA
Active external keyboard display adds 7 mA (100 mA with backlight on).

PHYSICAL
DIMENSIONS: 241 x 104 x 51 mm (9.5 x 4.1 x 2 in.) ; additional clearance required for cables and leads.
MASS / WEIGHT: 0.7 kg / 1.5 lbs

WARRANTY
Warranty is stated in the published price list and in opening pages of this and other user manuals.

7. Installation

Related Topics
- *Quickstart* (p. 41)
- *Specifications* (p. 95)
- *Installation* (p. 97)
- *Operation* (p. 295)

7.1 Protection from Moisture — Details

Protection from Moisture — Overview (p. 92)
Protection from Moisture — Details (p. 97)
Protection from Moisture — Products (p. 636)

When humidity levels reach the dew point, condensation occurs and damage to CR800 electronics can result. Effective humidity control is the responsibility of the user.

The CR800 module is protected by a packet of silica gel desiccant, which is installed at the factory. This packet is replaced whenever the CR800 is repaired at Campbell Scientific. The module should not normally be opened except to replace the internal lithium battery.

Adequate desiccant should be placed in the instrumentation enclosure to provide added protection.

7.2 Temperature Range

The CR800 is designed to operate reliably from –40 to 75 °C (–55 °C to 85 °C, optional) in non-condensing environments.

7.3 Enclosures

Enclosures — Details (p. 97)
Enclosures — Products (p. 635)

Illustrated in figure *Enclosure* (p. 98) is the typical use of enclosures available from Campbell Scientific designed for housing the CR800. This style of enclosure is classified as NEMA 4X (watertight, dust-tight, corrosion-resistant, indoor and outdoor use). Enclosures have back plates to which are mounted the CR800 datalogger and associated peripherals. Back plates are perforated on one-inch centers with a grid of holes that are lined as needed with anchoring nylon inserts. The CR800 base has mounting holes (some models may be shipped with rubber inserts in these holes) through which small screws are inserted into the nylon anchors. **Remove rubber inserts**, if any, to access the mounting holes. Screws and nylon anchors are supplied in a kit that is included with the enclosure.

Figure 31. Enclosure

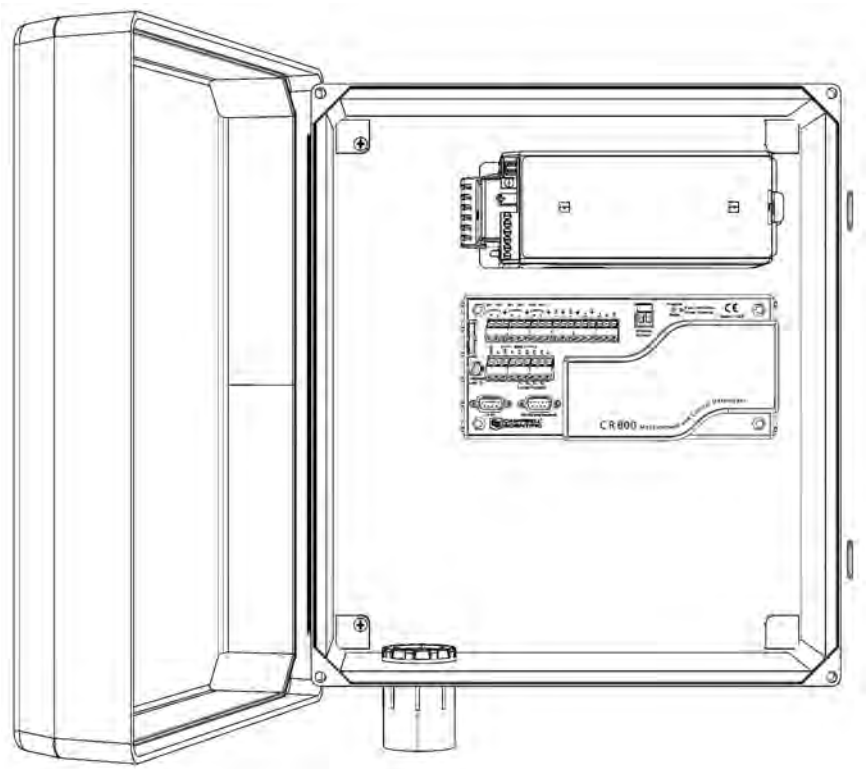

7.4 Power Supplies — Details

Related Topics:
- Power Supplies — Specifications
- *Power Supplies — Quickstart* (p. 44)
- *Power Supplies — Overview* (p. 85)
- *Power Supplies — Details* (p. 98)
- *Power Supplies — Products* (p. 633)
- *Power Sources* (p. 99)
- *Troubleshooting — Power Supplies* (p. 469)

Reliable power is the foundation of a reliable data-acquisition system. When designing a power supply, consideration should be made regarding worst-case power requirements and environmental extremes. For example, the power requirement of a weather station may be substantially higher during extreme cold, while at the same time, the extreme cold constricts the power available from the power supply.

The CR800 is internally protected against accidental polarity reversal on the power inputs.

The CR800 has a modest-input power requirement. For example, in low-power applications, it can operate for several months on non-rechargeable batteries. Power systems for longer-term remote applications typically consist of a charging source, a charge controller, and a rechargeable battery. When ac line power is available, a Vac-to-Vac or Vac-to-Vdc wall adapter, a peripheral charging

regulator, and a rechargeable battery can be used to construct a UPS (un-interruptible power supply).

Contact a Campbell Scientific application engineer if assistance in selecting a power supply is needed, particularly with applications in extreme environments.

7.4.1 CR800 Power Requirement

The CR800 is operable with power from 9.6 to 16 Vdc applied at the **POWER IN** terminals of the green connector on the face of the wiring panel.

The CR800 is internally protected against accidental polarity reversal on the power inputs. A transient voltage suppressor (TVS) diode at the **POWER IN 12V** terminals provides protection from intermittent high voltages by clamping these transients to within the range of 19 to 21 V . Sustained input voltages in excess of 19 V, can damage the TVS diode.

Caution Voltage levels at the **12V** and switched **SW12** terminals, and pin 8 on the **CS I/O** port, are tied closely to the voltage levels of the main power supply. For example, if the power received at the **POWER IN 12V** and **G** terminals is 16 Vdc, the **12V** and **SW12** terminals, and pin 8 on the **CS I/O** port, will supply 16 Vdc to a connected peripheral. If the connected peripheral or sensor is not designed for that voltage level, it may be damaged.

7.4.2 Calculating Power Consumption

Read More *Power Supplies — Overview* (p. 85).

System operating time for batteries can be determined by dividing the battery capacity (ampere-hours) by the average system current drain (amperes). The CR800 typically has a quiescent current drain of 0.5 mA (with display off) 0.6 mA with a 1 Hz sample rate, and >10 mA with a 100 Hz scan rate. When the CR1000KD Keyboard Display is active, an additional 7 mA is added to the current drain while enabling the backlight for the display adds 100 mA.

7.4.3 Power Sources

Related Topics:
- Power Supplies — Specifications
- *Power Supplies — Quickstart* (p. 44)
- *Power Supplies — Overview* (p. 85)
- *Power Supplies — Details* (p. 98)
- *Power Supplies — Products* (p. 633)
- *Power Sources* (p. 99)
- *Troubleshooting — Power Supplies* (p. 469)

Be aware that some Vac-to-Vdc power converters produce switching noise or *ac* (p. 481) ripple as an artifact of the ac-to-dc rectification process. Excessive switching noise on the output side of a power supply can increase measurement noise, and so increase measurement error. Noise from grid or mains power also may be transmitted through the transformer, or induced electro-magnetically from nearby motors, heaters, or power lines.

High-quality power regulators typically reduce noise due to power regulation. Using the optional 50 Hz or 60 Hz rejection arguments for CRBasic analog input measurement instructions (see *Sensor Support* (p. 295)) often improves rejection of noise sourced from power mains. The CRBasic standard deviation instruction, **SDEV(),** can be used to evaluate measurement noise.

The main power for the CR800 is provided by an external-power supply.

7.4.3.1 Vehicle Power Connections

If a CR800 is powered by a motor-vehicle power supply, a second power supply may be needed. When starting the motor of the vehicle, battery voltage often drops below the voltage required for datalogger operation. This may cause the CR800 to stop measurements until the voltage again equals or exceeds the lower limit. A second supply can be provided to prevent measurement lapses during vehicle starting. The figure *Connecting CR800 to Vehicle Power Supply* (p. 100) illustrates how a second power supply is connected to the CR800. The diode *OR* connection causes the supply with the largest voltage to power the CR800 and prevents the second backup supply from attempting to power the vehicle.

Figure 32. Connecting to Vehicle Power Supply

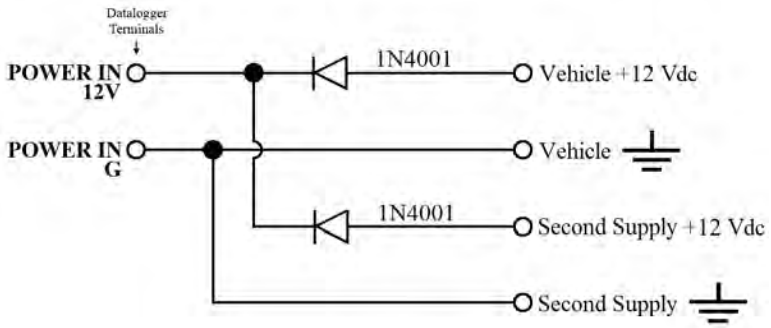

7.4.4 Uninterruptable Power Supply (UPS)

If external alkaline power is used, the alkaline battery pack is connected directly to the **POWER IN 12V** and **G** terminals (9.6 to 16 Vdc).

A UPS (un-interruptible power supply) is often the best power source for long-term installations. An external UPS consists of a primary-power source, a charging regulator external to the CR800, and an external battery. The primary power source, which is often a transformer, power converter, or solar panel, connects to the charging regulator, as does a nominal 12 Vdc sealed rechargeable battery. A third connection connects the charging regulator to the **12V** and **G** terminals of the **POWER IN** connector..

7.4.5 External Power Supply Installation

When connecting external power to the CR800, remove the green **POWER IN** connector from the CR800 face. Insert the positive lead into the green connector, then insert the negative lead. Re-seat the green connector into the CR800. The

CR800 is internally protected against reversed external-power polarity. Should this occur, correct the wire connections.

7.5 Switched Voltage Output — Details

Related Topics:
- Switched Voltage Output — Specifications
- *Switched Voltage Output — Overview* (p. 78)
- *Switched Voltage Output — Details* (p. 101)
- *PLC Control — Overview* (p. 74)
- *PLC Control — Details* (p. 237)
- *PLC Control Modules — Overview* (p. 349)
- *PLC Control Modules — Lists* (p. 624)
- *PLC Control — Instructions* (p. 536)

The CR800 wiring panel is a convenient power distribution device for powering sensors and peripherals that require a 5 Vdc, or 12 Vdc source. It has one continuous 12 Vdc terminal (**12V**), one program-controlled, switched, 12 Vdc terminal (**SW12**), and one continuous 5 Vdc terminal (**5V**). **SW12**, **12V**, and **5V** terminals limit current internally for protection against accidental short circuits. Voltage on the **12V** and **SW12** terminals can vary widely and will fluctuate with the dc supply used to power the CR800, so be careful to match the datalogger power supply to the requirements of the sensors. The **5V** terminal is internally regulated to within ±4%, which is good regulation as a power source, but typically not adequate for bridge sensor excitation. Table *Current Sourcing Limits* (p. 101) lists the current limits of **12V** and **5V** terminals. Greatly reduced output voltages on these terminals may occur if the current limits are exceeded. See the section *Terminals Configured for Control* (p. 349) for more information.

Table 5. Current Source and Sink Limits

Terminal	*Limit*[1]
VX or **EX** (voltage excitation)[2]	±25 mA maximum
SW12[3]	< 900 mA @ 20°C < 630 mA @ 50°C < 450 mA @ 70°C
12V + **SW12** (combined)[4]	< 3.00 A @ 20°C < 2.34 A @ 50°C < 1.80 A @ 70°C < 1.50 A @ 85°C
5V + **CS I/O** (combined)[5]	< 200 mA

Table 5. Current Source and Sink Limits

Terminal	*Limit*[1]

[1] "Source" is positive amperage; "sink" is negative amperage (–).

[2] Exceeding current limits will cause voltage output to become unstable. Voltage should stabilize once current is again reduced to within stated limits.

[3] A polyfuse is used to limit power. Result of overload is a voltage drop. To reset, disconnect and allow circuit to cool. Operating at the current limit is OK so long a a little fluctuation can be tolerated.

[4] Polyfuse protected. See footnote 3.

[5] Current is limited by a current limiting circuit, which holds the current at the maximum by dropping the voltage when the load is too great.

7.5.1 Switched-Voltage Excitation

Two switched, analog-output (excitation) terminals (**VX1** to **VX2**) operate under program control to provide ±2500 mV dc excitation. Check the accuracy specification of terminals configured for exctitation in *CR800 Specifications* (p. 95) to understand their limitations. Specifications are applicable only for loads not exceeding ±25 mA.

Read More Table *Current Source and Sink Limits* (p. 101) has more information on excitation load capacity.

CRBasic instructions that control voltage excitation include the following:

- **BrFull**()
- **BrFull6W**()
- **BrHalf**()
- **BrHalf3W**()
- **BrHalf4W**()
- **ExciteV**()

Note Square-wave ac excitation for use with polarizing bridge sensors is configured with the ***RevEx*** parameter of the bridge instructions.

7.5.2 Continuous Regulated (5V Terminal)

The **5V** terminal is regulated and remains near 5 Vdc (±4%) so long as the CR800 supply voltage remains above 9.6 Vdc. It is intended for power sensors or devices requiring a 5 Vdc power supply. It is not intended as an excitation source for bridge measurements. However, measurement of the **5V** terminal output, by means of jumpering to an analog input on the same CR800), will facilitate an accurate bridge measurement if **5V** must be used.

Note Table *Current Source and Sink Limits* (p. 101) has more information on excitation load capacity.

7.5.3 Continuous Unregulated Voltage (12V Terminal)

Use **12V** terminals to continuously power devices that require 12 Vdc. Voltage on the **12V** terminals will change with CR800 supply voltage.

Caution Voltage levels at the **12V** and switched **SW12** terminals, and pin 8 on the **CS I/O** port, are tied closely to the voltage levels of the main power supply. For example, if the power received at the **POWER IN 12V** and **G** terminals is 16 Vdc, the **12V** and **SW12** terminals, and pin 8 on the **CS I/O** port, will supply 16 Vdc to a connected peripheral. If the connected peripheral or sensor is not designed for that voltage level, it may be damaged.

7.5.4 Switched Unregulated Voltage (SW12 Terminal)

The **SW12** terminal is often used to power devices such as sensors that require 12 Vdc during measurement. Current sourcing must be limited to 900 mA or less at 20 °C. See table *Current Source and Sink Limits* (p. 101). Voltage on a **SW12** terminal will change with CR800 supply voltage. Two CRBasic instructions, **SW12()** and **PortSet()**, control the **SW12** terminal. Each instruction is handled differently by the CR800. **SW12()** is a processing task. Use it when controlling power to SDI-12 and serial sensors that use **SDI12Recorder()** or **SerialIn()** instructions respectively. CRBasic programming using **IF THEN** constructs to control **SW12**, such as when used for cell phone control, should also use the **SW12()** instruction.

PortSet() is a measurement task instruction. Use it when powering analog input sensors that need to be powered just prior to measurement.

A 12 Vdc switching circuit designed to be driven by a **C** terminal is available from Campbell Scientific. It is listed in the appendix *Relay Drivers — Products* (p. 625).

Note **SW12** terminal power is unregulated and can supply up to 900 mA at 20 °C. See table *Current Source and Sink Limits* (p. 101). A resettable polymeric fuse protects against over-current. Reset is accomplished by removing the load or turning off the **SW12** terminal for several seconds.

The **SW12** terminal may behave differently under *pipeline* (p. 150) and *sequential* (p. 151) modes. See *CRBasic Editor Help* for more information.

7.6 Grounding

Grounding the CR800 with its peripheral devices and sensors is critical in all applications. Proper grounding will ensure maximum ESD (electrostatic discharge) protection and measurement accuracy.

7.6.1 ESD Protection

Reading List:
- *ESD Protection* (p. 103)
- *Lightening Protection* (p. 105)

ESD (electrostatic discharge) can originate from several sources, the most common and destructive being lightning strikes. Primary lightning strikes hit the

CR800 or sensors directly. Secondary strikes induce a high voltage in power lines or sensor wires.

The primary devices for protection against ESD are gas-discharge tubes (GDT). All critical inputs and outputs on the CR800 are protected with GDTs or transient voltage suppression diodes. GDTs fire at 150 V to allow current to be diverted to the earth ground lug. To be effective, the earth ground lug must be properly connected to earth (chassis) ground. As shown in figure *Schematic of Grounds* (p. 105), signal grounds and power grounds have independent paths to the earth-ground lug.

Communication ports are another path for transients. You should provide communication paths, such as telephone or short-haul modem lines, with spark-gap protection. Spark-gap protection is usually an option with these products, so request it when ordering. Spark gaps must be connected to either the earth ground lug, the enclosure ground, or to the earth (chassis) ground.

A good earth (chassis) ground will minimize damage to the datalogger and sensors by providing a low-resistance path around the system to a point of low potential. Campbell Scientific recommends that all dataloggers be earth (chassis) grounded. All components of the system (dataloggers, sensors, external power supplies, mounts, housings, etc.) should be referenced to one common earth (chassis) ground.

In the field, at a minimum, a proper earth ground will consist of a 6 to 8 foot copper-sheathed grounding rod driven into the earth and connected to the large brass ground lug on the wiring panel with a 12 AWG wire. In low-conductive substrates, such as sand, very dry soil, ice, or rock, a single ground rod will probably not provide an adequate earth ground. For these situations, search for published literature on lightning protection or contact a qualified lightning-protection consultant.

In vehicle applications, the earth ground lug should be firmly attached to the vehicle chassis with 12 AWG wire or larger.

In laboratory applications, locating a stable earth ground is challenging, but still necessary. In older buildings, new Vac receptacles on older Vac wiring may indicate that a safety ground exists when, in fact, the socket is not grounded. If a safety ground does exist, good practice dictates the verification that it carries no current. If the integrity of the Vac power ground is in doubt, also ground the system through the building plumbing, or use another verified connection to earth ground.

Figure 33. Schematic of Grounds

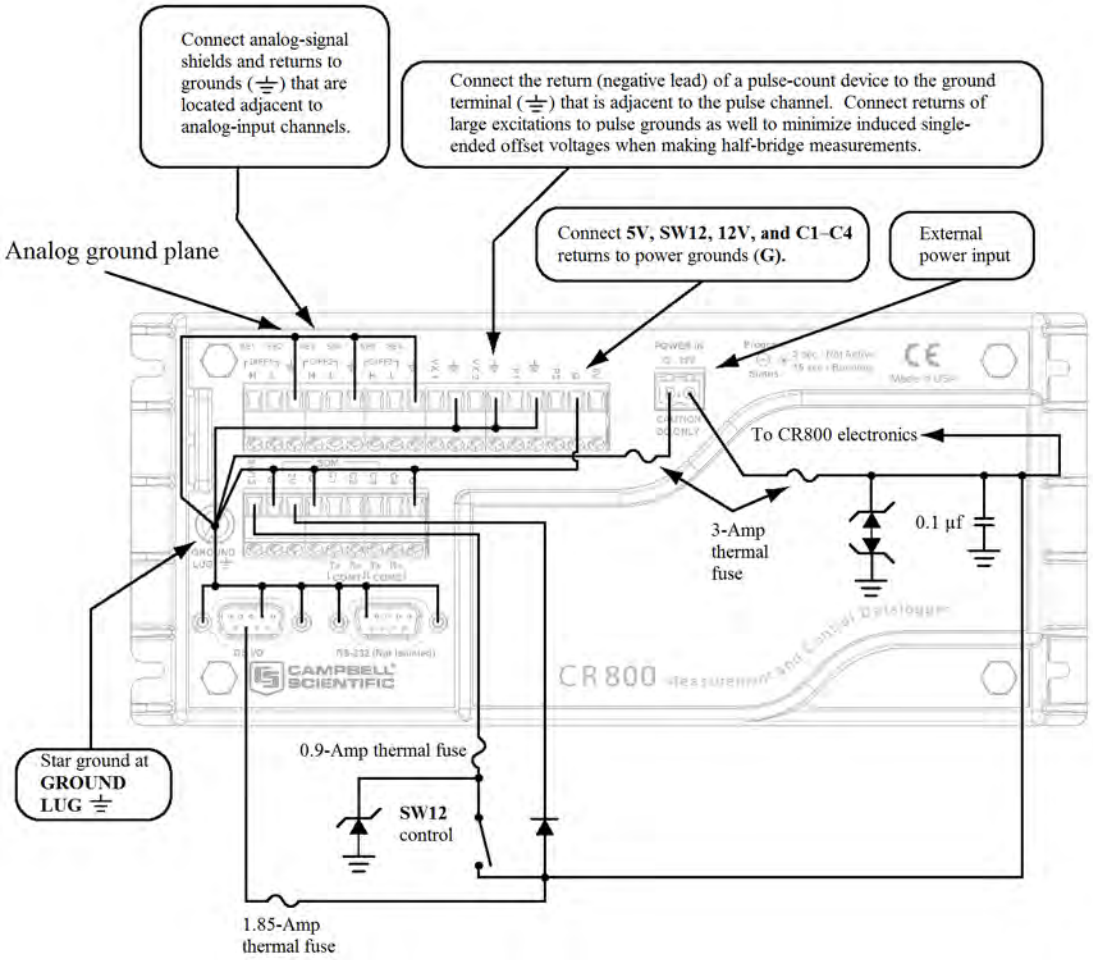

7.6.1.1 Lightning Protection

Reading List:
- *ESD Protection* (p. 103)
- *Lightening Protection* (p. 105)

The most common and destructive ESDs are primary and secondary lightning strikes. Primary lightning strikes hit instrumentation directly. Secondary strikes induce voltage in power lines or wires connected to instrumentation. While elaborate, expensive, and nearly infallible lightning protection systems are on the market, Campbell Scientific, for many years, has employed a simple and inexpensive design that protects most systems in most circumstances. The system employs a lightening rod, metal mast, heavy-gage ground wire, and ground rod to direct damaging current away from the CR800. This system, however, not infallible. Figure *Lightning-Protection Scheme* (p. 106) is a drawing of a typical application of the system.

Note Lightning strikes may damage or destroy the CR800 and associated sensors and power supplies.

In addition to protections discussed in , use of a simple lightning rod and low-resistance path to earth ground is adequate protection in many installations. .

Figure 34. Lightning-Protection Scheme

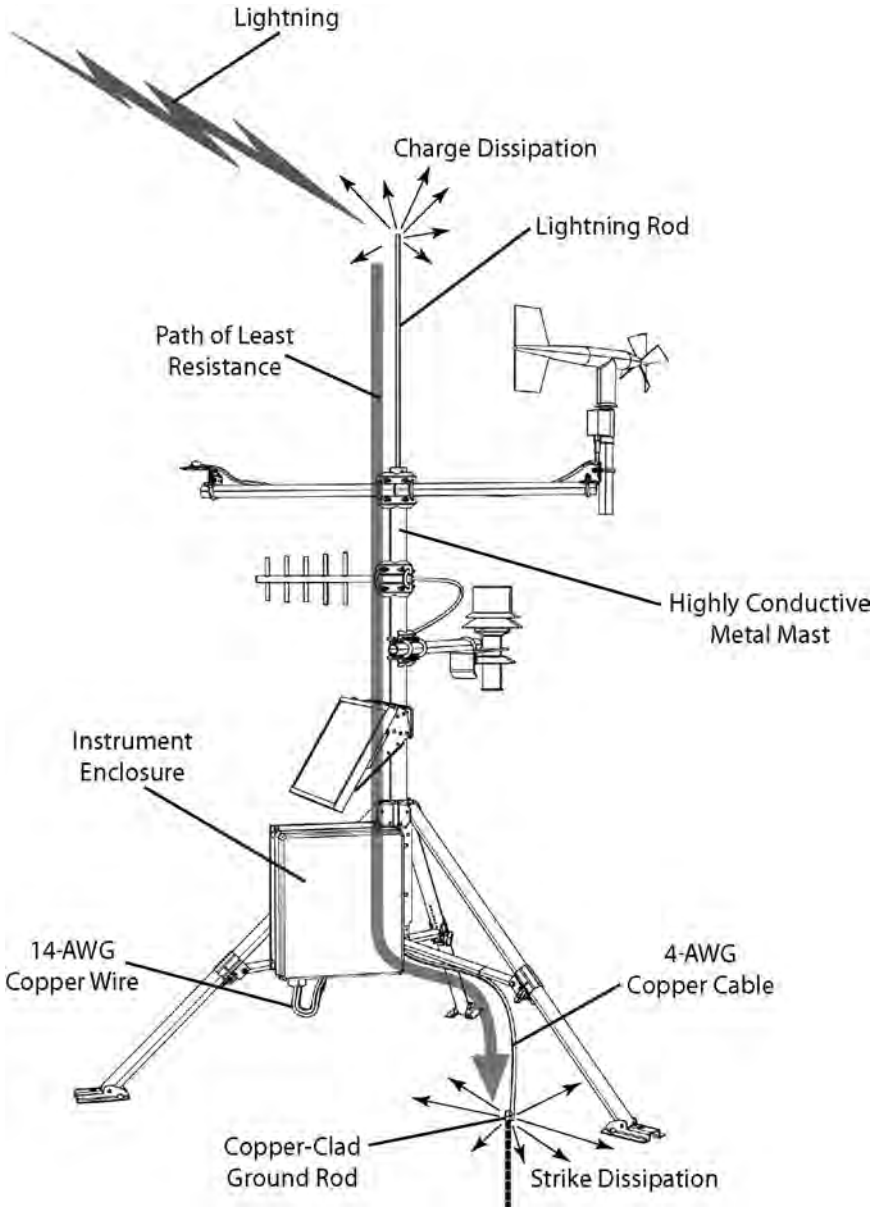

7.6.2 Single-Ended Measurement Reference

Low-level, single-ended voltage measurements (<200 mV) are sensitive to ground potential fluctuation due to changing return currents from **12V**, **SW12**, **5V**, and **C1** – **C4** terminals. The CR800 grounding scheme is designed to minimize these

fluctuations by separating signal grounds (⏚) from power grounds (**G**). To take advantage of this design, observe the following rules:

- Connect grounds associated with **12V**, **SW12**, **5V**, and **C1** – **C4** terminals to **G** terminals.
- Connect excitation grounds to the nearest ⏚ terminal on the same terminal block.
- Connect the low side of single-ended sensors to the nearest ⏚ terminal on the same terminal block.
- Connect shield wires to the ⏚ terminal nearest the terminals to which the sensor signal wires are connected.

Note Several ground wires can be connected to the same ground terminal.

If offset problems occur because of shield or ground leads with large current flow, tying the problem leads into ⏚ terminals next to terminals configured for excitation and pulse-count should help. Problem leads can also be tied directly to the ground lug to minimize induced single-ended offset voltages.

7.6.3 Ground-Potential Differences

Because a single-ended measurement is referenced to CR800 ground, any difference in ground potential between the sensor and the CR800 will result in a measurement error. Differential measurements MUST be used when the input ground is known to be at a different ground potential from CR800 ground. See the section *Single-Ended Measurements — Details* (p. 299) for more information.

Ground potential differences are a common problem when measuring full-bridge sensors (strain gages, pressure transducers, etc), and when measuring thermocouples in soil.

7.6.3.1 Soil Temperature Thermocouple

If the measuring junction of a thermocouple is not insulated when in soil or water, and the potential of earth ground is, for example, 1 mV greater at the sensor than at the point where the CR800 is grounded, the measured voltage is 1 mV greater than the thermocouple output. With a copper-constantan thermocouple, 1 mV equates to approximately 25 °C measurement error.

7.6.3.2 External Signal Conditioner

External instruments with integrated signal conditioners, such as an infrared gas analyzer (IRGA), are frequently used to make measurements and send analog information to the CR800. These instruments are often powered by the same Vac-line source as the CR800. Despite being tied to the same ground, differences in current drain and lead resistance result in different ground potentials at the two instruments. For this reason, a differential measurement should be made on the analog output from the external signal conditioner.

7.6.4 Ground Looping in Ionic Measurements

When measuring soil-moisture with a resistance block, or water conductivity with a resistance cell, the potential exists for a ground loop error. In the case of an ionic soil matric potential (soil moisture) sensor, a ground loop arises because soil

and water provide an alternate path for the excitation to return to CR800 ground. This example is modeled in the diagram *Model of a Ground Loop with a Resistive Sensor* (p. 108). With R_g in the resistor network, the signal measured from the sensor is described by the following equation:

$$V_1 = V_x \frac{R_s}{(R_s + R_f) + R_x R_f / R_g}$$

where

V_x is the excitation voltage
R_f is a fixed resistor
R_s is the sensor resistance
R_g is the resistance between the excited electrode and CR800 earth ground.

$R_x R_f / R_g$ is the source of error due to the ground loop. When R_g is large, the error is negligible. Note that the geometry of the electrodes has a great effect on the magnitude of this error. The Delmhorst gypsum block used in the Campbell Scientific 227 probe has two concentric cylindrical electrodes. The center electrode is used for excitation; because it is encircled by the ground electrode, the path for a ground loop through the soil is greatly reduced. Moisture blocks which consist of two parallel plate electrodes are particularly susceptible to ground loop problems. Similar considerations apply to the geometry of the electrodes in water conductivity sensors.

The ground electrode of the conductivity or soil moisture probe and the CR800 earth ground form a galvanic cell, with the water/soil solution acting as the electrolyte. If current is allowed to flow, the resulting oxidation or reduction will soon damage the electrode, just as if dc excitation was used to make the measurement. Campbell Scientific resistive soil probes and conductivity probes are built with series capacitors to block this dc current. In addition to preventing sensor deterioration, the capacitors block any dc component from affecting the measurement.

Figure 35. Model of a Ground Loop with a Resistive Sensor

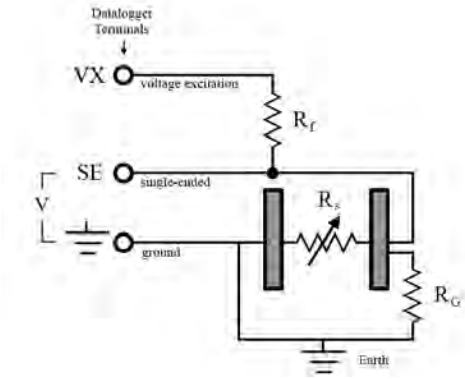

7.7 CR800 Configuration — Details

Related Topics:
- *CR800 Configuration — Overview* (p. 85)
- *CR800 Configuration — Details* (p. 109)
- *Status, Settings, and Data Table Information (Status/Settings/DTI)* (p. 577)

Your new CR800 is already configured to communicate with Campbell Scientific *datalogger support software* (p. 93) on the **RS-232** port, and over most telecommunication links. If you find that an older CR800 no longer communicates with these simple links, do a full reset of the unit, as described in the section *Resetting the CR800* (p. 360). Some applications, especially those implementing TCP/IP features, may require changes to factory defaults.

Configuration (verb) includes actions that modify firmware or software in the CR800. Most of these actions are associated with CR800 settings registers. For the purpose of this discussion, the CRBasic program, which, of course, configures the CR800, is discussed in a separate section (*CRBasic Programming — Details* (p. 120)).

7.7.1 Configuration Tools

Configuration tools include the following:

- *Device Configuration Utility* (p. 109)
- *Network Planner* (p. 110)
- *Status/Settings/DTI* (p. 112)
- *CRBasic program* (p. 113)
- *Executable CPU: files* (p. 113)
- *Keyboard display* (p. 439)
- Terminal emulator

7.7.1.1 Configuration with DevConfig

The most versatile configuration tool is *Device Configuration Utility*, or *DevConfig*. It is bundled with *LoggerNet*, *PC400*, *RTDAQ*, or it can be downloaded from *www.campbellsci.com/downloads* (*http://www.campbellsci.com/downloads*). It has the following basic features:

- Extensive context sensitive help
- Connects directly to the CR800 over a serial or IP connection
- Facilitates access to most settings, status registers, and data table information registers
- Includes a terminal emulator that facilitates access to the command prompt of the CR800

DevConfig Help guides you through connection and use. The simplest connection is to, connect a serial cable from the computer COM port or USB port to the **RS-232** port on the CR800 as shown in figure *Power and Serial Communication Connections* (p. 48). *DevConfig* updates are available at *www.campbellsci.com/downloads* (*http://www.campbellsci.com/downloads*).

Figure 36. Device Configuration Utility (DevConfig)

7.7.1.2 Network Planner

Network Planner is a drag-and-drop application used in designing PakBus datalogger networks. You interact with *Network Planner* through a drawing canvas upon which are placed PC and datalogger nodes. Links representing various telecommunication options are drawn between nodes. Activities to take place between the nodes are specified. *Network Planner* automatically specifies settings for individual devices and creates configuring XML files to download to each device through *DevConfig* *(p. 109).*

Figure 37. Network Planner Setup

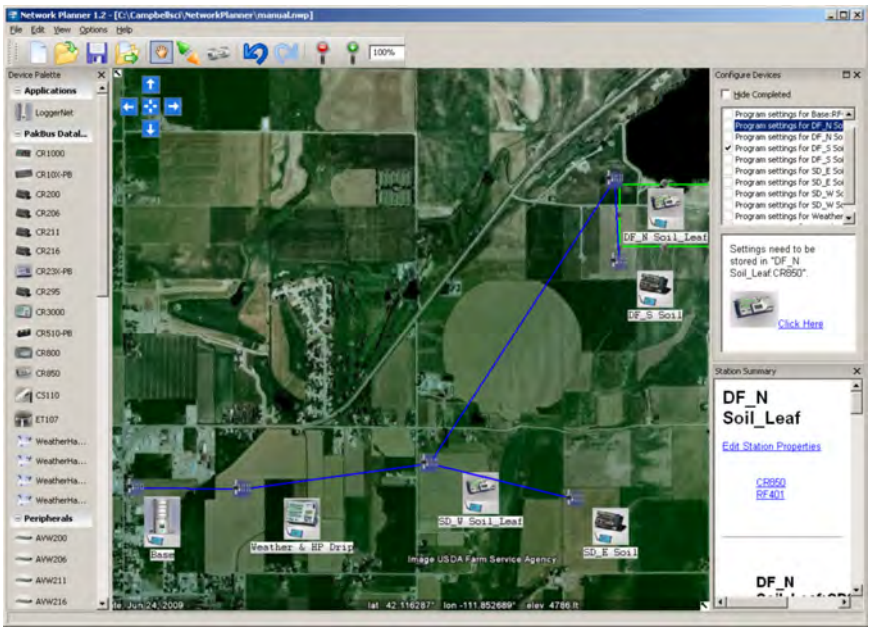

7.7.1.2.1 Overview

Network Planner allows you to

- Create a graphical representation of a network, as shown in figure *Network Planner Setup* *(p. 111),*
- Determine settings for devices and *LoggerNet*, and
- Program devices and *LoggerNet* with new settings.

Why is *Network Planner* needed?

- PakBus protocol allows complex networks to be developed.
- Setup of individual devices is difficult.
- Settings are distributed across a network.
- Different device types need settings coordinated.

Caveats

- *Network Planner* aids in, but does not replace, the design process.
- It aids development of PakBus networks only.
- It does not make hardware recommendations.
- It does not generate datalogger programs.
- It does not understand distances or topography; that is, it does not warn when broadcast distances are exceeded, nor does it identify obstacles to radio transmission.

For more detailed information on *Network Planner*, please consult the *LoggerNet* manual, which is available at *www.campbellsci.com*.

7.7.1.2.2 Basics

PakBus Settings

- Device addresses are automatically allocated but can be changed.
- Device connections are used to determine whether neighbor lists should be specified.
- Verification intervals will depend on the activities between devices.
- Beacon intervals will be assigned but will have default values.
- Network role (for example, router or leaf node) will be assigned based on device links.

Device Links and Communication Resources

- Disallow links that will not work.
- Comparative desirability of links.
- Prevent over-allocation of resources.
- Optimal RS-232 and CS I/O ME baud rates based on device links.
- Optimal packet-size limits based on anticipated routes.

Fundamentals of Using Network Planner

- Add a background (optional)
- Place stations, peripherals, etc.
- Establish links
- Set up activities (scheduled poll, callback)
- Configure devices
- Configure *LoggerNet* (adds the planned network to the *LoggerNet* **Network Map**)

7.7.1.3 Configuration with Status/Settings/DTI

Related Topics:
- *Status, Settings, and Data Table Information (Status/Settings/DTI)* ***(p. 577)***
- *Common Uses of the Status Table* ***(p. 578)***
- *Status Table as Debug Resource* ***(p. 461)***

The **Status** table, CR800 settings, and the **DataTableInfo** table (collectively, **Status/Settings/DTI**) contain registers, settings, and information essential to setup, programming, and debugging of many advanced CR800 systems. Status/Settings/DTI are numerous. Note the following:

- All Status/Settings/DTI, except a handful, are accessible through a keyword. This discussion is organized around these keywords. Keywords and descriptions are listed alphabetically in sub-appendix *Status/Settings/DTI Descriptions (Alphabetical)* ***(p. 585).***
- Status fields are read only (mostly). Some are resettable.
- Settings are read/write (mostly).
- DTI are read only.
- Directories in sub-appendix *Status/Settings/DTI Directories* ***(p. 578)*** list several groupings of keywords. Each keyword listed in these groups is linked to the relevant description.
- Some Status/Settings/DTI have multiple names depending on the interface

used to access them.

- No single interface accesses all Status/Settings/DTI. Interfaces used for access include the following:

Table 6. Status/Setting/DTI: Access Points

Access Point	*Locate in...*
Settings Editor	*Device Configuration Utility*, *LoggerNet Connect screen*, *PakBus Graph*. See *Datalogger Support Software — Details* (p. 429).
Status	View as a data table in a *numeric monitor* (p. 495).
DataTableInfo	View as a data table in a *numeric monitor* (p. 495).
Station Status	Menu item in *datalogger support software* (p. 631).
Edit Settings	Menu item in *PakBusGraph* software.
Settings	Menu item in CR1000KD Keyboard Display **Configure, Settings**
status.keyword/settings.keyword	Syntax in CRBasic program

[1] Information presented in **Station Status** is not updated automatically. Click the **Refresh** button to update.

Note Communication and processor bandwidth are consumed when generating the **Status** and **DataTableInfo** tables. If the CR800 is very tight on processing time, as may occur in very long or complex operations, retrieving the **Status** table repeatedly may cause *skipped scans* (p. 463).

Status577/Settings/DTI (p. 577)can be set or accessed using CRBasic instructions **SetStatus()** or **SetSetting()**.

For example, to set the setting **StationName** to **BlackIceCouloir**, the following syntax is used:

```
SetSetting("StationName","BlackIceCouloir")
```

where ***StationName*** is the keyword for the setting, and ***BlackIceCouloir*** is the set value.

Settings can be requested by the CRBasic program using the following syntax:

```
x = Status.[setting]
```

where ***Setting*** is the keyword for a setting.

For example, to acquire the value set in setting **StationName**, use the following statement:

```
x = Status.StationName
```

7.7.1.4 Configuration with Executable CPU: Files

Many CR800 settings can be changed remotely over a telecommunication link either directly, or as discussed in section *Configuration with CRBasic Program* (p. 113), as part of the CRBasic program. These conveniences come with the risk of inadvertently changing settings and disabling communications. Such an occurence will likely require an on-site visit to correct the problem if at least one of the provisions discussed in this section is not put in place. For example,

wireless-ethernet (cell) modems are often controlled by a switched 12 Vdc (**SW12**) terminal. **SW12** is normally off, so, if the program controlling **SW12** is disabled, such as by replacing it with a program that neglects **SW12** control, the cell modem is switched off and the remote CR800 drops out of telecommunications.

Executable CPU: files automatically execute according to the schedule outlined in table . Each can contain code to set specific settings in the CR800.

Executable CPU: files include the following:

- *'Include' file* (p. 145)
- *Default.cr8 file* (p. 114)
- *Powerup.ini file* (p. 365)

To be used, each file needs to be created and then placed on the CPU: drive of the CR800. The 'include' file and default.cr8 file consist of CRBasic code. Powerup.ini has a different, limited programming language.

7.7.1.4.1 Default.cr8 File

A file named default.cr8 can be stored on the CR800 CPU: drive. At power up, the CR800 loads default.cr8 if no other program takes priority (see *Executable File Run Priorities* (p. 114). Default.cr8 can be edited to preserve critical datalogger settings such as communication settings, but cannot be more than a few lines of code.

Downloading operating systems over telecommunications requires much of the available CR800 memory. If the intent is to load operating systems via a telecommunication link, and have a default.cr8 file in the CR800, the default.cr8 program should not allocate significant memory, as might happen by allocating a large USR: drive. Do not use a **DataTable()** instruction set for auto allocation of memory, either. Refer to the section *Updating the Operating System (OS)* (p. 115) for information about sending the operating system.

Execution of default.cr8 at power-up can be aborted by holding down the **DEL** key on the CR1000KD Keyboard Display.

CRBasic Example 1. Simple Default.cr8 File to Control SW12 Terminal

```
'This program example demonstrates use of a Default.cr8 file.  It must be restricted
'to few lines of code.  This program controls the SW12 switched power terminal, which
'may be helpful in assuring that the default power state of a remote modem is ON.

BeginProg
  Scan(1,Sec,0,0)
    If TimeIntoInterval(15,60,Sec) Then SW12(1)
    If TimeIntoInterval(45,60,Sec) Then SW12(0)
  NextScan
EndProg
```

7.7.1.4.2 Executable File Run Priorities

1. When the CR800 powers up, it executes commands in the powerup.ini file (on Campbell Scientific mass storage device including commands to set the CRBasic program file attributes to **Run Now** or **Run On Power-up**.

2. When the CR800 powers up, a program file marked as **Run On Power-up** will

be the current program. Otherwise, any file marked as **Run Now** will be used.

3. If there is a file specified in the **Include File Name** setting, it is compiled at the end of the program selected in step.
4. If there is no file selected in step 1, or if the selected file cannot be compiled, the CR800 will attempt to run the program listed in the **Include File Name** setting. The CR800 allows a **SlowSequence** statement to take the place of the **BeginProg** statement. This allows the "Include File" to act as the default program.
5. If the program listed in the **Include File Name** setting cannot be run or if no program is specified, the CR800 will attempt to run the program named default.cr8 on its CPU: drive.
6. If there is no default.cr8 file or it cannot be compiled, the CR800 will not automatically run any program.

7.7.2 CR800 Configuration — Details

Following are a few common configuration actions:

- *Updating the operating system* (p. 115).
- Access a CR800 *register* (p. 112) to help troubleshoot
- Set the CR800 clock
- Save current configuration
- Restore a configuration

Tools available to perform these actions are listed in the following table:

Table 7. Common Configuration Actions and Tools

Action	*Tools to Use*[1]
Updating the operating system	*DevConfig* (p. 109) software, *Program Send* (p. 498), memory card, mass storage device
Access a register	DevConfig, PakBus Graph, CRBasic program, *'Include' file* (p. 145), *Default.cr8 file* (p. 114).
Set the CR800 clock	DevConfig, PC200W, PC400, LoggerNet
Save / restore configuration	DevConfig

[1] Tools are listed in order of preference.

7.7.2.1 Updating the Operating System (OS)

The CR800 is shipped with the operating system pre-loaded. Check the pre-loaded version by connecting your PC to the CR800 using the procedure outlined in *DevConfig Help*. OS version is displayed in the following location:

Deployment tab

Datalogger tab

OS Version text box

Update the OS on the CR800 as directed in *DevConfig Help*. The current version of the OS is found at www.campbellsci.com/downloads. OS updates are free of charge.

Note An OS file has a .obj extension. It can be compressed using the gzip compression algorithm. The datalogger will accept and decompress the file on receipt. See the appendix *Program and OS Compression* (p. 440).

Note the following precautions:

- Since sending an OS resets CR800 memory, data loss will certainly occur. Depending on several factors, the CR800 may also become incapacitated for a time.
  - Is sending the OS necessary to correct a critical problem? If not, consider waiting until a scheduled maintenance visit to the site.
  - Is the site conveniently accessible such that a site visit can be undertaken to correct a problem of reset settings without excessive expense?
  - If the OS must be sent, and the site is difficult or expensive to access, try the OS download procedure on an identically programmed, more conveniently located CR800.
- Campbell Scientific recommends upgrading operating systems only with a direct-hardwire link. However, the **Send Program** (p. 498) button in the *datalogger support software* (p. 630) allows the OS to be sent over all software supported telecommunication systems.
  - Operating systems are very large files — **be cautious of line charges**.
  - Updating the OS may reset CR800 settings, even settings critical to supporting the telecommunication link. Newer operating systems minimize this risk.

Note Beginning with OS 25, the OS has become large enough that a CR800 with serial number ≤ 3604, which has only 2 MB of SRAM, may not have enough memory to receive it under some circumstances. If problems are encountered with a 2 MB CR800, sending the OS over a direct serial connection is usually successful.

The operating system is updated with one of the following tools:

7.7.2.1.1 OS Update with DevConfig Send OS Tab

Using this method results in the CR800 being restored to factory defaults. The existing OS is over written as it is received. Failure to receive the complete new OS will leave the CR800 in an unstable state. Use this method only with a direct hardwire serial connection.

How

Use the following procedure with *DevConfig*: Do not software **Connect** to the CR800.

1. Select CR800 from the list of devices at left
2. Select the appropriate communication port and baud rate at the bottom left
3. Click the **Send OS** tab located at the top of *DevConfig* window
4. Follow the on-screen **OS Download Instructions**

Pros/Cons

This is a good way to recover a CR800 that has gone into an unresponsive state. Often, an operating system can be loaded even if you are unable to communicate with the CR800 through other means.

Loading an operating system through this method will do the following:

1. Restore all CR800 settings to factory defaults
2. Delete data in final storage
3. Delete data from and remove the USR drive
4. Delete program files stored on the datalogger

7.7.2.1.2 OS Update with DevConfig

This method is very similar to sending an OS as a program, with the exception that you have to manually prepare the datalogger to accept the new OS.

How

1. Connect to the CR800 with *Connect* or *DevConfig*
2. Collect data
3. Transfer a *default.CR1* (p. 114) program file to the CR800 CPU: drive
4. Stop the current program and select the option to delete associated data (this will free up SRAM memory allocated for data storage)
5. Collect files from the USR: drive (if applicable)
6. Delete the USR: drive (if applicable)
7. Send the new .obj OS file to the CR800
8. Restart the previous program (default.CR1 will be running after OS compiles)

Pros/Cons

This method is preferred because the user must manually configure the datalogger to receive an OS and thus should be cognizant of what is happening (loss of data, program being stopped, etc.).

Loading an operating system through this method will do the following:

1. Preserve all CR800 settings
2. Delete all data in final storage
3. Delete USR: drive
4. Stop current program deletes data and clears run options
5. Deletes data generated using the **CardOut()** or **TableFile()** instructions

7.7.2.1.3 OS Update with DevConfig

A send program command is a feature of *DevConfig* and other *datalogger support software* (p. 630). Location of this command in the software is listed in table Program Send Command Locations

Program Send Command Locations		
Datalogger Support Software	***Name of Button***	***Location of Button***
DevConfig	**Send Program**	**Logger Control** tab lower left
LoggerNet	**Send New...**	**Connect** window, lower right
PC400	**Send Program**	Main window, lower right
PC200W	**Send Program**	Main window, lower right
RTDAQ	**Send Program**	Main window, lower right

This method results in the CR800 retaining its settings (a feature since OS version 16). The new OS file is temporarily stored in CR800 SRAM memory, which necessitates the following:

- Sufficient memory needs to be available. Before attempting to send the OS, you may need to delete other files in the CPU: and USR: drives, and you may need to remove the USR: drive altogether. Since OS 25, older 2 MB CR800s do not have sufficient memory to perform this operation.
- SRAM will be cleared to make room, so program run options and data will be lost. If CR800 communications are controlled with the current program, first load a default.cr8 CRBasic program on to the CPU: drive. Default.cr8 will run by default after the CR800 compiles the new OS and clears the current run options.

How

From the *LoggerNet* **Connect** window, perform the following steps:

1. Connect to the station
2. Collect data
3. Click the **Send New…**
4. Select the OS file to send
5. Restart the existing program through **File Control**, or send a new program with *CRBasic Editor* and specify new run options.

Pros/Cons

This is the best way to load a new operating system on the CR800 and have its settings retained (most of the time). This means that you will still be able to communicate with the station because the PakBus address is preserved and PakBusTCP client connections are maintained. Plus, if you are using a TCP/IP connection, the file transfer is much faster than loading a new OS directly through *DevConfig*.

The bad news is that, since it clears the run options for the current program, you can lose communications with the station if power is toggled to a communication peripheral under program control, such as turning a cell modem on/off to conserve power use.

Also, if sufficient memory is not available, instability may result. It's probably best to clear out the memory before attempting to send the new OS file. If you have defined a USR drive you will probably need to remove it as well.

Loading an operating system through this method will do the following:

1. Preserve all CR800 settings
2. Delete all data in final storage
3. Stop current program (Stop and deletes data) and clears run options
4. Deletes data generated using the CardOut() instruction

7.7.2.1.4 OS Update with DevConfig

How

1. Place a *powerup.ini* (p. 365) text file and operating system .obj file on the external memory device
2. Attached the external memory device to the datalogger
3. Power cycle the datalogger

Pros/Cons

This is a great way to change the OS without a laptop in the field. The down side is only if you want to do more than one thing with the powerup.ini, such as change OS and load a new program, which necessitates that you use separate cards or modify the .ini file between the two tasks you wish to perform.

Loading an operating system through this method will do the following:

1. Preserve all datalogger settings
2. Delete all data in final storage
3. Preserve USR drive and data stored there
4. Maintains program run options
5. Deletes data generated using the **CardOut()** or **TableFile()** instructions

DevConfig **Send OS** tab:

- If you are having trouble communicating with the CR800
- If you want to return the CR800 to a known configuration

Send Program (p. 498) or **Send New...** command:

- If you want to send an OS remotely
- If you are not too concerned about the consequences

File Control tab:

- If you want to update the OS remotely
- If your only connection to the CR800 is over IP
- If you have IP access and want to change the OS for testing purposes

External memory and PowerUp.ini file:

- If you want to change the OS without a PC

7.7.2.2 Restoring Factory Defaults

In *DevConfig*, clicking the **Factory Defaults** button at the base of the **Settings Editor** tab sends a command to the CR800 to revert to its factory default settings. The reverted values will not take effect until the changes have been applied.

7.7.2.3 Saving and Restoring Configurations

In *DevConfig*, clicking **Save** on a summary screen saves the configuration to an XML file. This file can be used to load a saved configuration back into the CR800 by clicking **Read File** and **Apply**.

Figure 38. Summary of CR800 Configuration

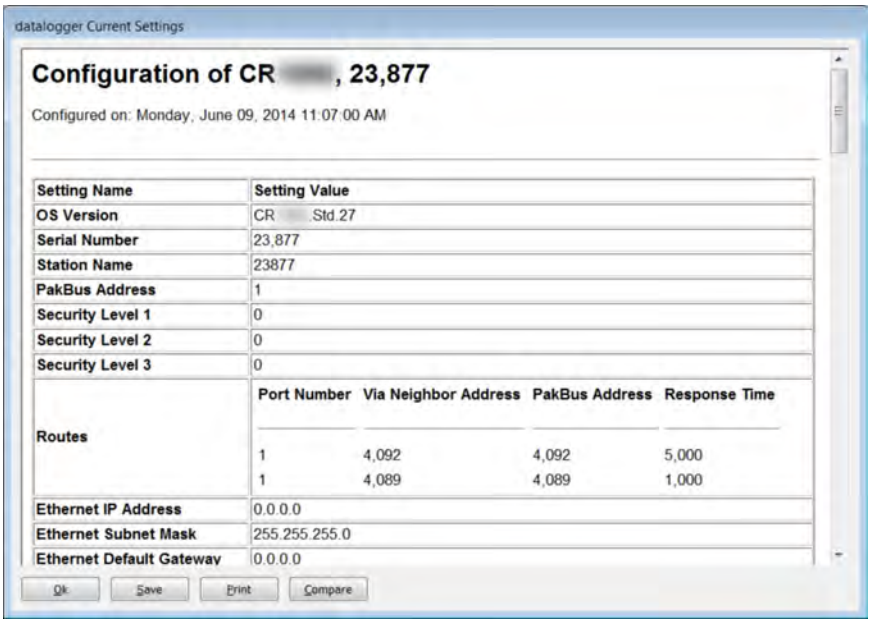

7.8 CRBasic Programming — Details

Related Topics:
- *CRBasic Programming — Overview* (p. 86)
- *CRBasic Programming — Details* (p. 120)
- *CRBasic Programming — Instructions* (p. 511)
- *Programming Resource Library* (p. 167)
- *CRBasic Editor Help*

Programs are created with either *Short Cut* (p. 501) or *CRBasic Editor* (p. 123). Old CR10X and CR23X programs can be converted to CRBasic code using Transformer.exe (executable file included with *LoggerNet*). Programs can be up to 490 KB in size; most programs, however, are much smaller.

7.8.1 Program Structure

Essential elements of a CRBasic program are listed in the table *CRBasic Program Structure* (p. 121) and demonstrated in CRBasic example *Program Structure* (p. 121).

Table 8. CRBasic Program Structure

Declarations	Define CR800 memory usage. Declare constants, variables, aliases, units, and data tables.
Declare constants	List fixed constants.
Declare **Public** variables	List / dimension variables viewable during program execution.
Declare **Dim** variables	List / dimension variables not viewable during program execution.
Define **Alias**es	Assign aliases to variables.
Define **Units**	Assign engineering units to variable (optional). Units are strictly for documentation. The CR800 makes no use of Units nor checks Unit accuracy.
Define data tables.	Define stored data tables.
Process / store trigger	Set triggers when data should be stored. Triggers may be a fixed interval, a condition, or both.
Table size	Set the size of a data table.
Other on-line storage devices	Send data to a Campbell Scientific mass storage device if available.
Processing of data	List data to be stored in the data table, e.g. samples, averages, maxima, minima, etc. Processes or calculations repeated during program execution can be packaged in a subroutine and called when needed rather than repeating the code each time.
Begin program	Begin program defines the beginning of statements defining CR800 actions.
Set scan interval	The scan sets the interval for a series of measurements.
Measurements	Enter measurements to make.
Processing	Enter any additional processing.
Call data table(s)	Declared data tables must be called to process and store data.
Initiate controls	Check measurements and initiate controls if necessary.
NextScan	Loop back to set scan and wait for the next scan.
End program	End program defines the ending of statements defining CR800 actions.

CRBasic Program Structure

```
'Declarations

'Define Constants
Const RevDiff = 1
Const Del = 0 'default
Const Integ = 250
Const Mult = 1
Const Offset = 0

'Define public variables
Public RefTemp
Public TC(6)

'Define Units
Units RefTemp = degC
Units TC = DegC


'Define data tables
DataTable(Temp,1,2000)
  DataInterval(0,10,min,10)
  Average(1,RefTemp,FP2,0)
  Average(6,TC(),FP2,0)
EndTable


'Begin Program
BeginProg

  'Set scan interval
  Scan(1,Sec,3,0)


    'Measurements
    PanelTemp(RefTemp,250)
    TCDiff(TC()...Offset)

    'Processing (None in this
    'example)


    'Call data table
    CallTable Temp

    'Controls (None in this
    'example)

  'Loop to next scan
  NextScan

'End Program
EndProg
```

Declare constants

Declare public variables, dimension array, and declare units.

Define data table

Declarations

Measure

Call data table

Scan loop

7.8.2 Writing and Editing Programs

7.8.2.1 Short Cut Programming Wizard

Short Cut is easy-to-use, menu-driven software that presents lists of predefined measurement, processing, and control algorithms from which to choose. You make choices, and *Short Cut* writes the CRBasic code required to perform the tasks. *Short Cut* creates a wiring diagram to simplify connection of sensors and external devices. *Quickstart Tutorial* (p. 41) works through a measurement example using *Short Cut*.

For many complex applications, *Short Cut* is still a good place to start. When as much information as possible is entered, *Short Cut* will create a program template from which to work, already formatted with most of the proper structure, measurement routines, and variables. The program can then be edited further using *CRBasic Program Editor*.

7.8.2.2 CRBasic Editor

CR800 application programs are written in a variation of BASIC (Beginner's All-purpose Symbolic Instruction Code) computer language, CRBasic (Campbell Recorder BASIC). *CRBasic Editor* is a text editor that facilitates creation and modification of the ASCII text file that constitutes the CR800 application program. *CRBasic Editor* is a component of *LoggerNet* (p. 631), *RTDAQ*, and *PC400 datalogger support software* (p. 93).

Fundamental elements of CRBasic include the following:

- Variables — named packets of CR800 memory into which are stored values that normally vary during program execution. Values are typically the result of measurements and processing. Variables are given an alphanumeric name and can be dimensioned into arrays of related data.
- Constants — discrete packets of CR800 memory into which are stored specific values that do not vary during program executions. Constants are given alphanumeric names and assigned values at the beginning declarations of a CRBasic program.

Note Keywords and predefined constants are reserved for internal CR800 use. If a user-programmed variable happens to be a keyword or predefined constant, a runtime or compile error will occur. To correct the error, simply change the variable name by adding or deleting one or more letters, numbers, or the underscore (_) from the variable name, then recompile and resend the program. *CRBasic Editor Help* provides a list of keywords and predefined constants.

- Common instructions — instructions (called "commands" in BASIC) and operators used in most BASIC languages, including program control statements, and logic and mathematical operators.
- Special instructions — instructions (commands) unique to CRBasic, including measurement instructions, and processing instructions that compress many common calculations used in CR800 dataloggers.

These four elements must be properly placed within the program structure.

7.8.2.2.1 Inserting Comments into Program

Comments are non-executable text placed within the body of a program to document or clarify program algorithms.

As shown in CRBasic example *Inserting Comments* (p. 124), comments are inserted into a program by preceding the comment with a single quote ('). Comments can be entered either as independent lines or following CR800 code. When the CR800 compiler sees a single quote ('), it ignores the rest of the line.

CRBasic Example 2. Inserting Comments

```
'This program example demonstrates the insertion of comments into a program.  Comments are
'placed in two places: to occupy single lines, such as this explanation does, or to be
'placed after a statement.

'Declaration of variables starts here.
Public Start(6)                              'Declare the start time array

BeginProg
EndProg
```

7.8.2.2.2 Conserving Program Memory

One or more of the following memory-saving techniques can be used on the rare occasions when a program reaches memory limits:

- Declare variables as **DIM** instead of **Public**. **DIM** variables do not require buffer memory for data retrieval.
- Reduce arrays to the minimum size needed. Arrays save memory over the use of scalars as there is less "meta-data" required per value. However, as a rough approximation, 192000 (4 kB memory) or 87000 (2 kB memory) variables will fill available memory.
- Use variable arrays with aliases instead of individual variables with unique names. Aliases consume less memory than unique variable names.
- Confine string concatenation to **DIM** variables.
- Dimension string variables only to the size required.

Read More More information on string variable-memory use and conservation is available in *String Operations* (p. 275).

7.8.3 Sending CRBasic Programs

The CR800 requires that a CRBasic program file be sent to its memory to direct measurement, processing, and data-storage operations. The program file can have the extension cr8 or .dld and can be compressed using the GZip algorithm before sending it to the CR800. Upon receipt of the file, the CR800 automatically decompresses the file and uses it just as any other program file. See the appendix *Program and OS Compression* (p. 440) for more information.

Options for sending a program include the following:

- **Program Send** (p. 498) command in *datalogger-support software* (p. 93)
- **Program** send command in *Device Configuration Utility* (*DevConfig* (p. 109))
- Campbell Scientific *mass storage device* (p. 629)

A good practice is to always retrieve data from the CR800 before sending a program; otherwise, data may be lost.

Read More See *File Management* (p. 361) and the Campbell Scientific mass storage device documentation available at *www.campbellsci.com*.

7.8.3.1 Preserving Data at Program Send

When sending programs to the CR800 through the software options listed in table *Program Send Options that Reset Memory* (p. 125), memory is reset and data are erased.

When data retention is desired, send programs using the **File Control Send** (p. 488) command or *CRBasic Editor* command **Compile, Save, Send** in the **Compile** menu. The window shown in the figure *CRBasic Editor Program Send File Control Window* (p. 125) is displayed before the program is sent. Select **Run Now**, **Run On Power-up**, and **Preserve data if no table changed** before pressing **Send Program**.

Note To retain data, **Preserve data if no table changed** must be selected whether or not a Campbell Scientific mass storage device is connected.

Regardless of the program-upload tool used, if any change occurs to data table structures listed in table *Data Table Structures* (p. 126), data will be erased when a new program is sent.

Table 9. Program Send Options that Reset Memory*
LoggerNet | *Connect* | **Program Send**
PC400 | **Clock/Program** | **Send Program**
PC200W | **Clock/Program** | **Send Program**
RTDAQ | **Clock/Program** | **Send Program**
DevConfig | **Logger Control** | **Send Program**
*Reset memory and set program attributes to **Run Always**

Figure 39. CRBasic Editor Program Send File Control window

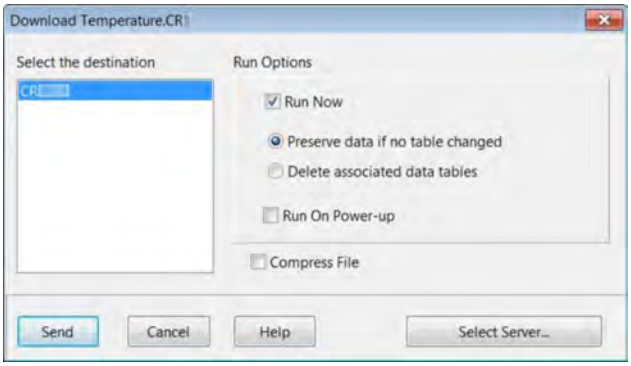

Table 10. Data Table Structures
–Data table name(s)
–Data-output interval or offset
–Number of fields per record
–Number of bytes per field
–Field type, size, name, or position
–Number of records in table

7.8.4 Programming Syntax

7.8.4.1 Program Statements

CRBasic programs are made up of a series of statements. Each statement normally occupies one line of text in the program file. Statements consist of instructions, variables, constants, expressions, or a combination of these. "Instructions" are CRBasic commands. Normally, only one instruction is included in a statement. However, some instructions, such as **If** and **Then**, are allowed to be included in the same statement.

Lists of instructions and expression operators can be found in the appendix *CRBasic Programming Instructions* *(p. 511).* A full treatment of each instruction and operator is located in the *Help* files of *CRBasic Editor* *(p. 123).*

7.8.4.1.1 Multiple Statements on One Line

Multiple short statements can be placed on a single text line if they are separated by a colon (**:**). This is a convenient feature in some programs. However, in general, programs that confine text lines to single statements are easier for humans to read.

In most cases, regarding statements separated by **:** as being separate lines is safe. However, in the case of an implied **EndIf**, CRBasic behaves in what may be an unexpected manner. In the case of an **If...Then...Else...EndIf** statement, where the **EndIf** is only implied, it is implied after the last statement on the line. For example:

```
If A then B : C : D
```

does not mean:

```
If A then B (implied EndIf) : C : D
```

Rather, it does mean:

```
If A then B : C : D (implied EndIf)
```

7.8.4.1.2 One Statement on Multiple Lines

Long statements that overrun the *CRBasic Editor* page width can be continued on the next line if the statement break includes a space and an underscore (_). The underscore must be the last character in a text line, other than additional white space.

Note CRBasic statements are limited to 512 characters, whether or not a line continuation is used.

Examples:

```
Public A, B, _
  C,D, E, F

If (A And B) _
  Or (C And D) _
  Or (E And F) then ExitScan
```

7.8.4.2 Single-Statement Declarations

Single-statements are used to declare variables, constants, variable and constant related elements, and the station name. The following instructions are used usually before the **BeginProg** instruction:

- **Public**
- **Dim**
- **Constant**
- **Units**
- **Alias**
- **StationName**

The table *Rules for Names* (p. 157) lists declaration names and allowed lengths. See the section *Predefined Constants* (p. 136) for other naming limitations.

7.8.4.3 Declaring Variables

A variable is a packet of memory that is given an alphanumeric name. Measurements and processing results pass through variables during program execution. Variables are declared as **Public** or **Dim**. **Public** variables are viewable through *numeric monitors* (p. 495). **Dim** variables cannot be viewed. A public variables can be set as read-only, using the **ReadOnly** instruction, so that it cannot be changed from a numeric monitor. The program, however, continues to have read/write access to the variable.

Declared variables are initialized once when the program starts. Additionally, variables that are used in the **Function()** or **Sub()** declaration, or that are declared within the body of the function or subroutine, are local to that function or subroutine.

Variable names can be up to 39 characters in length, but most variables should be no more than 35 characters long. This allows for four additional characters that are added as a suffix to the variable name when it is output to a data table. Variable names can contain the following characters:

- A to Z
- a to z
- 0 to 9
- _ (underscore)
- $

Names must start with a letter, underscore, or dollar sign. Spaces and quote marks are not allowed. Variable names are not case sensitive.

Several variables can be declared on a single line, separated by commas:

```
Public RefTemp, AirTemp2, Batt_Volt
```

Variables can also be assigned initial values in the declaration. Following is an example of declaring a variable and assigning it an initial value.

```
Public SetTemp = {35}
```

In string variables, string size defaults to 24 characters (changed from 16 characters in April 2013, OS 26).

7.8.4.3.1 Declaring Data Types

Variables and data values stored in final memory can be configured with various data types to optimize program execution and memory usage.

The declaration of variables with the **Dim** or **Public** instructions allows an optional type descriptor **As** that specifies the data type. The default data type (declaration without a descriptor) is ***IEEE4*** floating point, which is equivalent to the **As Float** declaration. Variable data types are listed in the table *Data Types in Variable Memory* (p. 129, p. 128). Final-data memory data types are listed in the table *Data Types in Final-Data Memory* (p. 129). CRBasic example *Data Type Declarations* (p. 130) shows various data types in use in the declarations and output sections of a program.

CRBasic allows mixing data types within a single array of variables; however, this practice can result in at least one problem. The datalogger support software is incapable of efficiently handling different data types for the same field name. Consequently, the software mangles the field names in data file headers.

Table 11. Data Types in Variable Memory

Name	Command	Description	Word Size (Bytes)	Notes	Resolution / Range
Float	***As Float*** or ***As IEEE4***	IEEE floating point	4	Data type of all variables unless declared otherwise. IEEE Standard 754	±1.4E–45 to ±3.4E38
Long	***As Long***	Signed integer	4	Use to store count data in the range of ±2,147,483,648 Speed: integer math is faster than floating point math. Resolution: 32 bits. Compare to 24 bits in IEEE4. Suitable for storing whole numbers, counting number, and integers in final-data memory. If storing non-integers, the fractional portion of the value is lost.	–2,147,483,648 to +2,147,483,647
Boolean	***As Boolean***	Signed integer	4	Use to store true or false states, such as states of flags and control ports. 0 is always false. –1 is always true. Depending on the application, any other number may be interpreted as true or false. See the section *True = -1, False = 0* (p. 162).	True = –1 or any number ≥ 1 False = any number ≥ 0 and < 1

Table 11. Data Types in Variable Memory

Name	Command	Description	Word Size (Bytes)	Notes	Resolution / Range
String	***As String***	ASCII string	Minimum: 3 (4 with null terminator) Default: 24 Maximum: limited only to the size of available CR800 memory.	See caution.[1] String size is defined by the CR800 operating system and CRBasic program. When converting from **STRING** to **FLOAT**, numerics at the beginning of a string convert, but conversion stops when a non-numeric is encountered. If the string begins with a non-numeric, the **FLOAT** will be **NAN**. If the string contains multiple numeric values separated by non-numeric characters, the **SplitStr()** instruction can be used to parse out the numeric values. See the sections *String Operations* (p. 275) and *Serial I/O* (p. 238).	Unless declared otherwise, string size is 24 bytes or characters. String size is allocated in multiples of four bytes; for example, **String * 25**, **String * 26**, **String * 27**, and **String * 28** allocate 28 bytes (27 usable). Minimum string size is 4 (3 usable). See *CRBasic Editor Help* for more information. Maximum length is limited only by available CR800 memory.

[1] CAUTION When using a very long string in a variable declared **Public**, the operations of *datalogger support software* (p. 631) will frequently transmit the entire string over the communication link. If communication bandwidth is limited, or if communications are paid for by they byte, declaring the variable **Dim** may be preferred.

Table 12. Data Types in Final-Data Memory

Name	Argument	Description	Word Size (Bytes)	Notes	Resolution / Range
FP2	***FP2***	Campbell Scientific floating point	2	Default final-memory data type. Use ***FP2*** for stored data requiring 3 or 4 significant digits. If more significant digits are needed, use ***IEEE4*** or an offset.	**Zero**: 0.000 **Minimum**: ±0.001 **Maximum**: ±7999. **Absolute Value** / **Decimal Location**: 0 – 7.999: X.XXX 8 – 79.99: XX.XX 80 – 799.9: XXX.X 800 – 7999.: XXXX.
IEEE4	***IEEE4*** or ***Float***	IEEE floating point	4	IEEE Standard 754	±1.4E–45 to ±3.4E38
Long	***Long***	Signed integer	4	Use to store count data in the range of ±2,147,483,648 Speed: integer math is faster than floating point math. Resolution: 32 bits. Compare to 24 bits in IEEE4. Suitable for storing whole numbers, counting number, and integers in final-data memory. If storing non-integers, the fractional portion of the value is lost.	–2,147,483,648 to +2,147,483,647

Table 12. Data Types in Final-Data Memory

Name	Argument	Description	Word Size (Bytes)	Notes	Resolution / Range
UINT2	***UINT2***	Unsigned integer	2	Use to store positive count data ≤ +65535. Use to store port or flag status. See CRBasic example *Load binary information into a variable* (p. 137). When **Public FLOAT**s convert to *UINT2* at final data storage, values outside the range 0 – 65535 yield unusable data. **INF** converts to **65535**. **NAN** converts to 0.	0 to 65535
UINT4	***UINT4***	Unsigned integer	4	Use to store positive count data ≤ 2147483647. Other uses include storage of long ID numbers (such as are read from a bar reader), serial numbers, or address. May also be required for use in some Modbus devices.	0 to 2147483647
Boolean	***Boolean***	Signed integer	4	Use to store true or false states, such as states of flags and control ports. 0 is always false. –1 is always true. Depending on the application, any other number may be interpreted as true or false. See the section *True = -1, False = 0* (p. 162). To save memory, consider using *UINT2* or *BOOL8*.	True = –1 or any number ≥ 1 False = any number ≥ 0 and < 1
Bool8	***Bool8***	Integer	1	8 bits (0 or 1) of information. Uses less space than 32-bit BOOLEAN. Holding the same information in BOOLEAN will require 256 bits. See *Bool8 Data Type* (p. 196).	True = 1, False = 0
NSEC	***NSEC***	Time stamp	8	Divided up as four bytes of seconds since 1990 and four bytes of nanoseconds into the second. Used to record and process time data. See *NSEC Data Type* (p. 200).	1 nanosecond
String	***String***	ASCII string	Minimum: 3 (4 with null terminator) Default: 24 Maximum: limited only to the size of available CR800 memory.	See caution.[1] String size is defined by the CR800 operating system and CRBasic program. When converting from **STRING** to **FLOAT**, numerics at the beginning of a string convert, but conversion stops when a non-numeric is encountered. If the string begins with a non-numeric, the **FLOAT** will be **NAN**. If the string contains multiple numeric values separated by non-numeric characters, the **SplitStr()** instruction can be used to parse out the numeric values. See the sections *String Operations* (p. 275) and *Serial I/O* (p. 238)..	Unless declared otherwise, string size is 24 bytes or characters. String size is allocated in multiples of four bytes; for example, **String * 25**, **String * 26**, **String * 27**, and **String * 28** allocate 28 bytes (27 usable). Minimum string size is 4 (3 usable). See *CRBasic Editor Help* for more information. Maximum length is limited only by available CR800 memory.

CRBasic Example 3. Data Type Declarations

```
'This program example demonstrates various data type declarations.

'Data type declarations associated with any one variable occur twice: first in a Public
'or Dim statement, then in a DataTable/EndTable segment.  If not otherwise specified, data
'types default to floating point: As Float in Public or Dim declarations, FP2 in data
'table declarations.

'Float Variable Examples
Public Z
Public X As Float

'Long Variable Example
Public CR800Time As Long
Public PosCounter As Long
Public PosNegCounter As Long

'Boolean Variable Examples
Public Switches(8) As Boolean
Public FLAGS(16) As Boolean

'String Variable Example
Public FirstName As String * 16 'allows a string up to 16 characters long

DataTable(TableName,True,-1)
  'FP2 Data Storage Example
  Sample(1,Z,FP2)

  'IEEE4 / Float Data Storage Example
  Sample(1,X,IEEE4)

  'UINT2 Data Storage Example
  Sample(1,PosCounter,UINT2)

  'LONG Data Storage Example
  Sample(1,PosNegCounter,Long)

  'STRING Data Storage Example
  Sample(1,FirstName,String)

  'BOOLEAN Data Storage Example
  Sample(8,Switches(),Boolean)

  'BOOL8 Data Storage Example
  Sample(2,FLAGS(),Bool8)

  'NSEC Data Storage Example
  Sample(1,CR800Time,Nsec)
EndTable

BeginProg
'Program logic goes here
EndProg
```

7.8.4.3.2 Dimensioning Numeric Variables

Some applications require multi-dimension arrays. Array dimensions are analogous to spatial dimensions (distance, area, and volume). A single-dimension array, declared as,

```
Public VariableName(x)
```

with (x) being the index, denotes *x* number of variables as a series.

A two-dimensional array, declared as,

```
Public VariableName(x,y)
```

with (x,y) being the indices, denotes (*x* • *y*) number of variables in a square x-by-y matrix.

Three-dimensional arrays, declared as

```
Public VariableName (x,y,z)
```

with (x,y,z) being the indices, have (x • y • z) number of variables in a cubic x-by-y-by-z matrix. Dimensions greater than three are not permitted by CRBasic.

When using variables in place of integers as dimension indices (see CRBasic example *Using variable array dimension indices* (p. 132), declaring the indices **As Long** variables is recommended. Doing so allows for more efficient use of CR800 resources.

CRBasic Example 4. Using Variable Array Dimension Indices

```
'This program example demonstrates the use of dimension indices in arrays.  The variable
'VariableName is declared with three dimensions with 4 in each index.  This indicates the
'array has means it has 64 elements.  Element 24 is loaded with the value 2.718.
'
Dim aaa As Long
Dim bbb As Long
Dim ccc As Long
Public VariableName(4,4,4) As Float

BeginProg
  Scan(1,sec,0,0)
    aaa = 3
    bbb = 2
    ccc = 4
    VariableName(aaa,bbb,ccc) = 2.718
  NextScan
EndProg
```

7.8.4.3.3 Dimensioning String Variables

Strings can be declared to a maximum of two dimensions. The third "dimension" is used for accessing characters within a string. See *String Operations* (p. 275). String length can also be declared. See the table *Data Types in Variable Memory*. (p. 129, p. 128)

A one-dimension string array called **StringVar**, with five elements in the array and each element with a length of 36 characters, is declared as

```
Public StringVar(5) As String * 36
```

Five variables are declared, each 36 characters long:

```
StringVar(1)
StringVar(2)
StringVar(3)
StringVar(4)
StringVar(5)
```

7.8.4.3.4 Declaring Flag Variables

A flag is a variable, usually declared **As Boolean** (p. 482), that indicates True or False, on or off, go or not go, etc. Program execution can be branched based on the value in a flag. Sometime flags are simply used to inform an observer that an event is occurring or has occurred. While any variable of any data type can be used as a flag, using Boolean variables, especially variables named "Flag", usually works best in practice. CRBasic example *Flag Declaration and Use* (p. 133) demonstrates changing words in a string based on a flag.

CRBasic Example 5. Flag Declaration and Use

```
'This program example demonstrates the declaration and use of flags as Boolean variables,
'and the use of strings to report flag status.  To run the demonstration, send this program
'to the CR800, then toggle variables Flag(1) and Flag(2) to true or false to see how the
'program logic sets the words "High" or "Low" in variables FlagReport(1) and FlagReport(2).
'To set a flag to true when using LoggerNet Connect Numeric Monitor, simply click on the
'forest green dot adjacent to the word "false."  If using a keyboard, a choice of "True" or
'"False" is made available.

Public Flag(2) As Boolean
Public FlagReport(2) As String

BeginProg
  Scan(1,Sec,0,0)

    If Flag(1) = True Then
      FlagReport(1) = "High"
    Else
      FlagReport(1) = "Low"
    EndIf

    If Flag(2) = True Then
      FlagReport(2) = "High"
    Else
      FlagReport(2) = "Low"
    EndIf

  NextScan
EndProg
```

7.8.4.4 Declaring Arrays

Related Topics:
- *Declaring Arrays* (p. 133)
- Arrays of Multipliers and Offsets
- *VarOutOfBounds* (p. 464)

Multiple variables of the same root name can be declared. The resulting series of like-named variables is called an array. An array is created by placing a suffix of

(x) on the variable name. X number of variables are created that differ in name only by the incrementing number in the suffix. For example, the four statements

```
Public TempC1
Public TempC2
Public TempC3
Public TempC4
```

can simply be condensed to

```
Public TempC(4).
```

This statement creates in memory the four variables ***TempC(1)***, ***TempC(2)***, ***TempC(3)***, and ***TempC(4)***.

A variable array is useful in program operations that affect many variables in the same way. CRBasic example *Using a Variable Array in Calculations* (p. 134) shows compact code that converts four temperatures (°C) to °F.

In this example, a **For/Next** structure with an incrementing variable is used to specify which elements of the array will have the logical operation applied to them. The CRBasic **For/Next** function will only operate on array elements that are clearly specified and ignore the rest. If an array element is not specifically referenced, as is the case in the declaration

```
Dim TempC()
```

CRBasic references only the first element of the array, **TempC(1)**.

See CRBasic example *Concatenation of Numbers and Strings* (p. 277) for an example of using the += *assignment operator* (p. 539) when working with arrays.

CRBasic Example 6. Using a Variable Array in Calculations

```
'This program example demonstrates the use of a variable array to reduce code.  In this
'example, two variable arrays are used to convert four temperature measurements from
'degree C to degrees F.

Public TempC(4)
Public TempF(4)
Dim T

BeginProg
  Scan(1,Sec,0,0)

    Therm107(TempC(),1,1,Vx1,0,250,1.0,0)
    Therm107(TempC(),1,2,Vx1,0,250,1.0,0)
    Therm107(TempC(),1,3,Vx1,0,250,1.0,0)
    Therm107(TempC(),1,4,Vx1,0,250,1.0,0)

    For T = 1 To 4
      TempF(T) = TempC(T) * 1.8 + 32
    Next T

  NextScan
EndProg
```

7.8.4.5 Declaring Local and Global Variables

Advanced programs may use *subroutines* (p. 281) or *functions* (p. 576), each of which can have a set of **Dim** variables dedicated to that subroutine or function. These

are called *local* variables. Names of local variable can be identical to names of *global variables* (p. 490) and to names of local variables declared in other subroutines and functions. This feature allows creation of a CRBasic library of reusable subroutines and functions that will not cause variable name conflicts. If a program with local **Dim** variables attempts to use them globally, the compile error **undeclared variable** will occur.

To make a local variable displayable, in cases where making it public creates a naming conflict, sample the local variable to a data table and display the data element table in a *numeric monitor* (p. 495).

When exchanging the contents of a global and local variables, declare each passing / receiving pair with identical data types and string lengths.

7.8.4.6 Initializing Variables

By default, variables are set equal to zero at the time the datalogger program compiles. Variables can be initialized to non-zero values in the declaration. Examples of syntax are shown in CRBasic example *Initializing Variables* (p. 135).

CRBasic Example 7. Initializing Variables

```
'This program example demonstrates how variables can be declared as specific data types.
'Variables not declared as a specific data type default to data type Float. Also
'demonstrated is the loading of values into variables that are being declared.

Public aaa As Long = 1 'Declaring a single variable As Long and loading the value of 1.
Public bbb(2) As String *20 = {"String_1", "String_2"} 'Declaring an array As String and
                                                        'loading strings in each element.
Public ccc As Boolean = True 'Declaring a variable As Boolean and loading the value of True.

'Initialize variable ddd elements 1,1 1,2 1,3 & 2,1.
'Elements (2,2) and (2,3) default to zero.
Dim ddd(2,3)= {1.1, 1.2, 1.3, 2.1}

'Initialize variable eee
Dim eee = 1.5

BeginProg
EndProg
```

7.8.4.7 Declaring Constants

CRBasic example *Using the Const Declaration* (p. 135) shows use of the constant declaration. A constant can be declared at the beginning of a program to assign an alphanumeric name to be used in place of a value so the program can refer to the name rather than the value itself. Using a constant in place of a value can make the program easier to read and modify, and more secure against unintended changes. If declared using **ConstTable** / **EndConstTable**, constants can be changed while the program is running by using the CR1000KD Keyboard Display menu (**Configure**, **Settings** | **Constant Table**) or the **C** command in a terminal emulator (see *Troubleshooting – Terminal Emulator* (p. 475)).

Note Using all uppercase for constant names may make them easier to recognize.

CRBasic Example 8. Using the Const Declaration

```
'This program example demonstrates the use of the Const declaration.

'Declare variables
Public PTempC
Public PTempF

'Declare constants
Const CtoF_Mult = 1.8
Const CtoF_Offset = 32

BeginProg
  Scan(1,Sec,0,0)
    PanelTemp(PTempC,250)
    PTempF = PTempC * CtoF_Mult + CtoF_Offset
  NextScan
EndProg
```

7.8.4.7.1 Predefined Constants

Many words are reserved for use by CRBasic. These words cannot be used as variable or table names in a program. Predefined constants include instruction names and valid alphanumeric names for instruction parameters. On account the list of predefined constants is long and frequently increases as the operating system is developed, the best course is to compile programs frequently during CRBasic program development. The compiler will catch the use of any reserved words. Following are listed predefined constants that are assigned a value:

- LoggerType = 800 (as in CR800)

These may be useful in programming.

7.8.4.8 Declaring Aliases and Units

A variable can be assigned a second name, or alias, in the CRBasic program. Aliasing is particularly useful when using arrays. Arrays are powerful tools for complex programming, but they place near identical names on multiple variables. Aliasing allows the power of the array to be used with the clarity of unique names.

The declared variable name can be used interchangeably with the declared alias in the body of the CRBasic program. However, when a value is stored to final-memory, the value will have the alias name attached to it. So, if the CRBasic program needs to access that value, the program must use the the alias-derived name.

Variables in one, two, and three dimensional arrays can be assigned units. Units are not used elsewhere in programming, but add meaning to resultant data table headers. If different units are to be used with each element of an array, first assign aliases to the array elements and then assign units to each alias. For example:

```
Alias var_array(1) = solar_radiation
Alias var_array(2) = quanta

Units solar_radiation = Wm-2
Units variable2 = moles_m-2_s-1
```

7.8.4.9 Numerical Formats

Four numerical formats are supported by CRBasic. Most common is the use of base-10 numbers. Scientific notation, binary, and hexadecimal formats can also be used, as shown in the table *Formats for Entering Numbers in CRBasic* (p. 137). Only standard, base-10 notation is supported by Campbell Scientific hardware and software displays.

Table 13. Formats for Entering Numbers in CRBasic

Format	*Example*	*Base-10 Equivalent Value*
Standard	6.832	6.832
Scientific notation	5.67E-8	$5.67X10^{-8}$
Binary	&B1101	13
Hexadecimal	&HFF	255

Binary format (1 = high, 0 = low) is useful when loading the status of multiple flags or ports into a single variable. For example, storing the binary number &B11100000 preserves the status of flags 8 through 1: flags 1 to 5 are low, 6 to 8 are high. CRBasic example *Load binary information into a variable* (p. 137) shows an algorithm that loads binary status of flags into a LONG integer variable.

CRBasic Example 9. Load binary information into a variable

```
'This program example demonstrates how binary data are loaded into a variable. The binary
'format (1 = high, 0 = low) is useful when loading the status of multiple flags
'or ports into a single variable.  For example, storing the binary number &B11100000
'preserves the status of flags 8 through 1: flags 1 to 5 are low, 6 to 8 are high.
'This example demonstrates an algorithm that loads binary status of flags into a LONG
'integer variable.

Public FlagInt As Long

Public Flag(8) As Boolean
Public I

DataTable(FlagOut,True,-1)
  Sample(1,FlagInt,UINT2)
EndTable

BeginProg
  Scan(1,Sec,3,0)

    FlagInt = 0
    For I = 1 To 8
      If Flag(I) = true Then
        FlagInt = FlagInt + 2 ^ (I - 1)
      EndIf
    Next I
    CallTable FlagOut

  NextScan
EndProg
```

7.8.4.10 Multi-Statement Declarations

Multi-statement declarations are used to declare data tables, subroutines, functions, and incidentals. Related instructions include the following:

- **DataTable() / EndTable**
- **Sub() / EndSub**
- **Function() / EndFunction**
- **ShutDown / ShutdownEnd**
- **DialSequence() / EndDialSequence**
- **ModemHangup() / EndModemHangup**
- **WebPageBegin() / WebPageEnd**

Multi-statement declarations can be located as follows:

- Prior to **BeginProg**,
- After **EndSequence** or an infinite **Scan()** / **NextScan** and before **EndProg** or **SlowSequence**
- Immediately following **SlowSequence. SlowSequence** code starts executing after any declaration sequence. Only declaration sequences can occur after **EndSequence** and before **SlowSequence** or **EndProg**.

7.8.4.10.1 Declaring Data Tables

Data are stored in tables as directed by the CRBasic program. A data table is created by a series of CRBasic instructions entered after variable declarations but before the **BeginProg** instruction. These instructions include:

```
DataTable()
  'Output Trigger Condition(s)
  'Output Processing Instructions
EndTable
```

A data table is essentially a file that resides in CR800 memory. The file is written to each time data are directed to that file. The trigger that initiates data storage is tripped either by the CR800 clock, or by an event, such as a high temperature. The number of data tables declared is limited only by the available CR800 memory (prior to OS 28, the limit was 30 data tables). Data tables may store individual measurements, individual calculated values, or summary data such as averages, maxima, or minima to data tables.

Each data table is associated with overhead information that becomes part of the ASCII file header (first few lines of the file) when data are downloaded to a PC. Overhead information includes the following:

- Table format
- Datalogger type and operating system version
- Name of the CRBasic program running in the datalogger
- Name of the data table (limited to 20 characters)
- Alphanumeric field names to attach at the head of data columns

This information is referred to as "table definitions."

Table 14. Typical Data Table

TOA5	CR800	CR800	1048	CR800.Std.13.06	CPU:Data.cr8	35723	OneMin
TIMESTAMP	RECORD	BattVolt_Avg	PTempC_Avg	TempC_Avg(1)	TempC_Avg(2)		
TS	RN	Volts	Deg C	Deg C	Deg C		
		Avg	Avg	Avg	Avg		
7/11/2007 16:10	0	13.18	23.5	23.54	25.12		
7/11/2007 16:20	1	13.18	23.5	23.54	25.51		
7/11/2007 16:30	2	13.19	23.51	23.05	25.73		
7/11/2007 16:40	3	13.19	23.54	23.61	25.95		
7/11/2007 16:50	4	13.19	23.55	23.09	26.05		
7/11/2007 17:00	5	13.19	23.55	23.05	26.05		
7/11/2007 17:10	6	13.18	23.55	23.06	25.04		

The table *Typical Data Table* (p. 138) shows a data file as it appears after the associated data table is downloaded from a CR800 programmed with the code in CRBasic example *Definition and Use of a Data Table* (p. 140). The data file consists of five or more lines. Each line consists of one or more fields. The first four lines constitute the file header. Subsequent lines contain data.

Note Discrete data files (ASCII or binary) can also be written to a CR800 memory drive using the **TableFile()** instruction.

The first header line is the environment line. It consists of eight fields, listed in table *TOA5 Environment Line* (p. 139).

Table 15. TOA5 Environment Line

Field	*Description*	*Changed By*
1	**TOA5**	
2	Station name	*DevConfig* or CRBasic program acting on the setting
3	Datalogger model	
4	Datalogger serial number	
5	Datalogger OS version	New OS
6	Datalogger program name	New program
7	Datalogger program signature	New or revised program
8	Table name	Revised program

The second header line reports field names. This line consists of a set of comma-delimited strings that identify the name of individual fields as given in the datalogger program. If the field is an element of an array, the name will be followed by a comma-separated list of subscripts within parentheses that identifies the array index. For example, a variable named **Values**, which is declared as a two-by-two array in the datalogger program, will be represented by four field names: **Values(1,1)**, **Values(1,2)**, **Values(2,1)**, and **Values(2,2)**. Scalar variables will not have array subscripts. There will be one value on this line for

each scalar value defined by the table. Default field names are a combination of the variable names (or alias) from which data are derived and a three-letter suffix. The suffix is an abbreviation of the data process that outputs the data to storage. For example, **Avg** is the abbreviation for the data process called by the **Average()** instruction. If the default field names are not acceptable to the programmer, **FieldNames()** instruction can be used to customize the names. **TIMESTAMP**, **RECORD**, **Batt_Volt_Avg**, **PTemp_C_Avg**, **TempC_Avg(1)**, and **TempC_Avg(2)** are the default field names in the table *Typical Data Table* (p. 138).

The third-header line identifies engineering units for that field of data. These units are declared at the beginning of a CRBasic program, as shown in CRBasic example *Definition and Use of a Data Table* (p. 140). Units are strictly for documentation. The CR800 does not make use of declared units, nor does it check their accuracy.

The fourth line of the header reports abbreviations of the data process used to produce the field of data. See the table *Data Process Abbreviations* (p. 166).

Subsequent lines are observed data and associated record keeping. The first field being a time stamp, and the second being the record (data line) number.

As shown in CRBasic example *Definition and Use of a Data Table* (p. 140), data table declaration begins with the **DataTable()** instruction and ends with the **EndTable()** instruction. Between **DataTable()** and **EndTable()** are instructions that define what data to store and under what conditions data are stored. A data table must be called by the CRBasic program for data storage processing to occur. Typically, data tables are called by the **CallTable()** instruction once each **Scan**.

CRBasic Example 10. Definition and Use of a Data Table

```
'This program example demonstrates definition and use of data tables.

'Declare Variables
Public Batt_Volt
Public PTemp_C
Public Temp_C(2)

'Define Units
Units Batt_Volt=Volts
Units PTemp_C=Deg_C
Units Temp_C()=Deg_C

'Define Data Tables
DataTable(OneMin,True,-1)          'Required beginning of data table declaration
  DataInterval(0,1,Min,10)         'Optional instruction to trigger table at one-minute interval
  Average(1,Batt_Volt,FP2,False)   'Optional instruction to average variable Batt_Volt
  Average(1,PTemp_C,FP2,False)     'Optional instruction to average variable PTemp_C
  Average(2,Temp_C(),FP2,False)    'Optional instruction to average variable Temp_C
EndTable                           'Required end of data table declaration

DataTable(Table1,True,-1)
  DataInterval(0,1440,Min,0)  'Optional instruction to trigger table at 24-hour interval
  Minimum(1,Batt_Volt,FP2,False,False)  'Optional instruction to determine minimum Batt_Volt
EndTable
```

```
'Main Program
BeginProg
  Scan(5,Sec,1,0)

    'Default Datalogger Battery Voltage measurement Batt_Volt:
    Battery(Batt_Volt)

    'Wiring Panel Temperature measurement PTemp_C:
    PanelTemp(PTemp_C,_60Hz)

    'Type T (copper-constantan) Thermocouple measurements Temp_C:
    TCDiff(Temp_C(),2,mV2_5C,1,TypeT,PTemp_C,True,0,_60Hz,1,0)

    'Call Data Tables and Store Data
    CallTable(OneMin)
    CallTable(Table1)

  NextScan
EndProg
```

DataTable() / EndTable Instructions

The **DataTable()** instruction has three parameters: a user-specified alphanumeric name for the table such as ***OneMin***, a trigger condition (for example, ***True***), and the size to make the table in memory such as ***-1*** (automatic allocation).

- ***Name*** — The table name can be any combination of numbers, letters, and underscore up to 20 characters in length. The first character must be a letter or underscore.

Note While other characters may pass the precompiler and compiler, runtime errors may occur if these naming rules are not adhered to.

- ***TrigVar*** — Controls whether or not data records are written to storage. Data records are written to storage if ***TrigVar*** is true and if other conditions, such as **DataInterval()**, are met. Default setting is ***-1*** (***True***). ***TrigVar*** may be a variable, expression, or constant. ***TrigVar*** does not control intermediate processing. Intermediate processing is controlled by the disable variable, ***DisableVar***, which is a parameter in all output processing instructions (see section, *Output Processing Instructions* (p. 143)).

Read More Section**,** *TrigVar and DisableVar — Controlling Data Output and Output Processing* (p. 193) discusses the use of ***TrigVar*** and ***DisableVar*** in special applications.

- ***Size*** — Table size is the number of records to store in a table before new data begins overwriting old data. If ***10*** is entered, 10 records are stored in the table; the eleventh record will overwrite the first record. If ***–1*** is entered, memory for the table is allocated automatically at the time the program compiles. Automatic allocation is preferred in most applications since the CR800 sizes all tables such that they fill (and begin overwriting the oldest data) at about the same time. Approximately 2 kB of extra data-table space are allocated to minimize the possibility of new data overwriting the oldest data in ring memory when *datalogger support software* (p. 630) collects the oldest data at the same time new data are written. These extra records are not reported in the **Status** table and are not reported to the support software and so are not collected.

CRBasic example *Definition and Use of a Data Table* (p. 140) creates a data table named **OneMin**, stores data once a minute as defined by **DataInterval()**, and retains the most recent records in SRAM. **DataRecordSize** entries in the **DataTableInformation** table report allocated memory in terms of number of records the tables hold.

DataInterval() Instruction

DataInterval() instructs the CR800 to both write data records at the specified interval and to recognize when a record has been skipped. The interval is independent of the **Scan()** / **NextScan** interval; however, it must be a multiple of the **Scan()** / **NextScan** interval.

Sometimes, usually because of a timing issue, program logic prevents a record from being written. If a record is not written, the CR800 recognizes the omission as a "lapse" and increments the **SkippedRecord** counter in the **Status** table. Lapses waste significant memory in the data table and may cause the data table to fill sooner than expected. **DataInterval()** instruction parameter ***Lapses*** controls the CR800 response to a lapse. See table *DataInterval () Lapse Parameter Options* (p. 142) for more information.

Note Program logic that results in lapses includes scan intervals inadequate to the length of the program (skipped scans), the use of **DataInterval()** in event-driven data tables, and logic that directs program execution around the **CallTable()** instruction.

A data table consists of successive 1 KB data frames. Each data frame contains a time stamp, frame number, and one or more records. By default, a time stamp and record number are not stored with each record. Rather, the datalogger support software data extraction extraction routine uses the frame time stamp and frame number to time stamp and number each record as it is stored to computer memory. This technique saves telecommunication bandwidth and 16 bytes of CR800 memory per record. However, when a record is skipped, or several records are skipped contiguously, a lapse occurs, the **SkippedRecords** status entry is incremented, and a 16-byte sub-header with time stamp and record number is inserted into the data frame before the next record is written. Consequently, programs that lapse frequently waste significant memory.

If ***Lapses*** is set to an argument of ***20***, the memory allocated for the data table is increased by enough memory to accommodate 20 sub-headers (320 bytes). If more than 20 lapses occur, the actual number of records that are written to the data table before the oldest is overwritten (ring memory) may be less than what was specified in the **DataTable()**.

If a program is planned to experience multiple lapses, and if telecommunication bandwidth is not a consideration, the ***Lapses*** parameter should be set to ***0*** to ensure the CR800 allocates adequate memory for each data table.

Table 16. DataInterval() **Lapse Parameter Options**	
DataInterval() Lapse ***Argument***	***Effect***
Lapse* > *0	If table record number is fixed, X data frames (1 kB per data frame) are added to data table if memory is available. If record number is auto-allocated, no memory is added to table.
Lapse* = *0	Time stamp and record number are always stored with each record.
Lapse* < *0	When lapse occurs, no new data frame is created. Record time stamps calculated at data extraction may be in error.

Scan Time and System Time

In some applications, system time (see *System Time* (p. 504)), rather than scan time (see *Scan Time* (p. 500)), is desired. To get the system time, the **CallTable()** instruction must be run outside the **Scan()** loop. See section *Time Stamps* (p. 295).

OpenInterval() Instruction

By default, the CR800 uses closed intervals. Data output to a data table based on **DataInterval()** includes measurements from only the current interval. Intermediate memory that contains measurements is cleared the next time the data table is called regardless of whether or not a record was written to the data table.

Typically, time-series data (averages, totals, maxima, etc.), that are output to a data table based on an interval, only include measurements from the current interval. After each data-output interval, the memory that contains the measurements for the time-series data are cleared. If a data-output interval is missed (because all criteria are not met for output to occur), the memory is cleared the next time the data table is called. If the **OpenInterval** instruction is contained in the **DataTable()** declaration, the memory is not cleared. This results in all measurements being included in the time-series data since the last time data were stored (even though the data may span multiple data-output intervals).

Note Array-based dataloggers, such as CR10X and CR23X, use open intervals exclusively.

Data-Output Processing Instructions

Data-storage processing instructions (aka, "output processing" instructions) determine what data are stored in a data table. When a data table is called in the CRBasic program, data-storage processing instructions process variables holding current inputs or calculations. If trigger conditions are true, for example if the data-output interval has expired, processed values are stored into the data table. In CRBasic example *Definition and Use of a Data Table* (p. 140), three averages are stored.

Consider the **Average()** instruction as an example data-storage processing instruction. **Average()** stores the average of a variable over the data-output interval. Its parameters are:

- ***Reps*** — number of sequential elements in the variable array for which averages are calculated. ***Reps*** is set to ***1*** to average ***PTemp***, and set to ***2*** to average two thermocouple temperatures, both of which reside in the variable array ***Temp_C***.

- ***Source*** — variable array to average. Variable arrays ***PTemp_C*** (an array of 1) and ***Temp_C()*** (an array of 2) are used.
- ***DataType*** — Data type for the stored average (the example uses data type ***FP2*** (p. 617)).

Read More See *Declaring Data Types* (p. 128) for more information on available data types.

- ***DisableVar*** — controls whether a measurement or value is included in an output processing function. A measurement or value is not included if ***DisableVar*** is ***true*** (≠ ***0***). For example, if the disable variable in an **Average()** instruction is ***true***, the current value will not be included in the average. CRBasic example *Use of the Disable Variable* (p. 144) and CRBasic example *Using NAN to Filter Data* (p. 460) show how ***DisableVar*** can be used to exclude values from an averaging process. In these examples, ***DisableVar*** is controlled by ***Flag1***. When ***Flag1*** is high, or ***True***, ***DisableVar*** is ***True***. When it is ***False***, ***DisableVar*** is ***False***. When ***False*** is entered as the argument for ***DisableVar***, all readings are included in the average. The average of variable ***Oscillator*** does not include samples occurring when ***Flag1*** is high (***True***), which results in an average of ***2***; when ***Flag1*** is low or ***False*** (all samples used), the average is ***1.5***.

Read More *TrigVar and DisableVar* (p. 193)— *Controlling Data Output and Output Processing* (p. 193) and *Measurements and NAN* (p. 458) discuss the use of ***TrigVar*** and ***DisableVar*** in special applications.

Read More For a complete list of output processing instructions, see the section *Final Data (Output to Memory) Precessing* (p. 516).

CRBasic Example 11. Use of the Disable Variable

```
'This program example demonstrates the use of the 'disable' variable, or DisableVar, which
'is a parameter in many output processing instructions.  Use of the 'disable' variable
'allows source data to be selectively included in averages, maxima, minima, etc.  If the
''disable' variable equals -1, or true, data are not included; if equal to 0, or false,
'data are included.  The 'disable' variable is set to false by default.

'Declare Variables and Units
Public Oscillator As Long
Public Flag(1) As Boolean
Public DisableVar As Boolean

'Define Data Tables
DataTable(OscAvgData,True,-1)
  DataInterval(0,1,Min,10)
  Average(1,Oscillator,FP2,DisableVar)
EndTable
```

```
'Main Program
BeginProg
  Scan(1,Sec,1,0)

    'Reset and Increment Counter
    If Oscillator = 2 Then Oscillator = 0
    Oscillator = Oscillator + 1

    'Process and Control
    If Oscillator = 1
      If Flag(1) = True Then
        DisableVar = True
      EndIf
    Else
      DisableVar = False
    EndIf

    'Call Data Tables and Store Data
    CallTable(OscAvgData)

  NextScan
EndProg
```

Numbers of Records

The exact number of records that can be stored in a data table is governed by a complex set of rules, the summary of which can be found in the appendix Numbers of Records in Data Tables.

7.8.4.10.2 Declaring Subroutines

Read More See section *Subroutines* (p. 281) for more information on programming with subroutines.

Subroutines allow a section of code to be called by multiple processes in the main body of a program. Subroutines are defined before the main program body of a program.

Note A particular subroutine can be called by multiple program sequences simultaneously. To preserve measurement and processing integrity, the CR800 queues calls on the subroutine, allowing only one call to be processed at a time in the order calls are received. This may cause unexpected pauses in the conflicting program sequences.

7.8.4.10.3 'Include' File

An alternative to a subroutine is an 'include' file. An 'include' file is a CRBasic program file that resides on the CR800 CPU: drive and compiles as an insert to the CRBasic program. It may also *run on its own* (p. 114). It is essentially a subroutine stored in a file separate from the main program file. It can be used once or multiple times by the main program, and by multiple programs. The file begins with the **SlowSequence** instruction and can contain any code.

Procedure to use the "Include File":

1. Write the file, beginning with the **SlowSequence** instruction followed by any other code.

2. Send the file to the CR800 using tools in the **File Control** menu of *datalogger support software* (p. 93).

3. Enter the path and name of the file in the **Include File** setting using *DevConfig* or *PakBusGraph*.

Figures *"Include File" Settings with DevConfig* (p. 147) and *"Include File" settings with PakBusGraph* (p. 147) show methods to set required settings with *DevConfig* or with telecommunications. There is no restriction on the length of the file. CRBasic example *Using an "Include File" to Control Switched 12 V* (p. 147) shows a program that expects a file to control power to a modem; CRBasic example *"Include File" to Control Switched 12 V* (p. 148) lists the code.

Consider the the example "include file", CPU:pakbus_broker.dld. The rules used by the CR800 when it starts are as follows:

1. If the logger is starting from power-up, any file that is marked as the "run on power-up" program is the "current program". Otherwise, any file that is marked as "run now" is selected. This behavior has always been present and is not affected by this setting.

2. If there is a file specified by this setting, it is incorporated into the program selected above.

3. If there is no current file selected or if the current file cannot be compiled, the datalogger will run the program given by this setting as the current program.

4. If the program run by this setting cannot be run or if no program is specified, the datalogger will attempt to run the program named default.cr8 on its CPU: drive.

5. If there is no default.cr8 file or if that file cannot be compiled, the datalogger will not run any program.

The CR800 will now allow a **SlowSequence** statement to take the place of the **BeginProg** statement. This feature allows the specified file to act both as an include file and as the default program.

The formal syntax for this setting follows:

```
include-setting := device-name ":" file-name "." file-extension.
device-name     := "CPU" | "USR"
File-extension  := "dld" | "cr8"
```

Figure 40. "Include File" Settings Via DevConfig

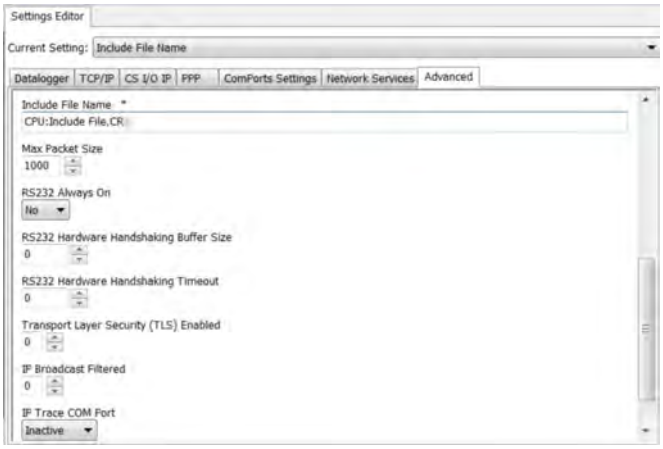

Figure 41. "Include File" Settings Via PakBusGraph

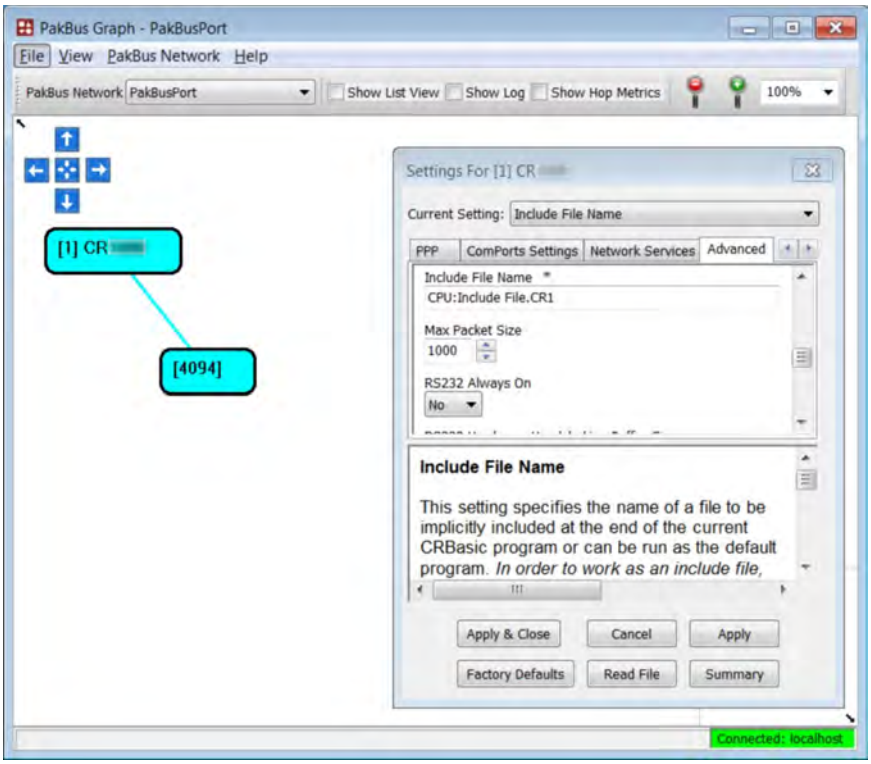

CRBasic Example 12. Using an 'Include' File

```
'This program example demonstrates the use of an 'include' file.  An 'include' file is a CRBasic
file that usually
'resides on the CPU: drive of the CR800.  It is essentially a subroutine that is
'stored in a file separate from the main program, but it compiles as an insert to the main
'program.  It can be used once or multiple times, and by multiple programs.
''Include' files begin with the SlowSequence instruction and can contain any code.
'
'Procedure to use an 'include' file in this example:
'1. Copy the code from the CRbasic example 'Include' File to Control Switched 12 V (p. 148) to
'   CRBasic Editor, name it 'IncludeFile.cr8, and save it to the same PC folder on which
'   resides the main program file (this make pre-compiling possible.  Including the
'   SlowSequence instruction as the first statement is required, followed by any other code.
'2. Send the 'include' file to the CPU: drive of the CR800 using the File Control menu
'   of the datalogger support software (p. 631).  Be sure to de-select the Run Now and Run On
'   Power-up options that are presented by the software when sending the file.
'3. Add the Include instruction to the main CRBasic program at the location from which the
'   'include' file is to be called (see the following code).
'4. Enter the CR800 file system path and file name after the Include() instruction, as shown
'   in the following code.
'
'IncludeFile.cr8 contains code to control power to a cellular phone modem.
'
'Cell phone + wire to be connected to SW12 terminal.  Negative (-) wire
'to G.

Public PTemp, batt_volt

DataTable(Test,1,-1)
  DataInterval(0,15,Sec,10)
  Minimum(1,batt_volt,FP2,0,False)
  Sample(1,PTemp,FP2)
EndTable

BeginProg
  Scan(1,Sec,0,0)
    PanelTemp(PTemp,250)
    Battery(Batt_volt)
    CallTable Test
  NextScan
  Include "CPU:IncludeFile.CR1" '<<<<<<<<<<<<<<<'include' file code executed here
EndProg
```

CRBasic Example 13. 'Include' File to Control SW12 Terminal.

```
'This program example demonstrates the use of an 'include' file.  See the documentation in CRBasic
example
'Using an Include File (p. 147)
'
'<<<<<<<<<<<<<<<<<<<<<<<<NOTE: No BeginProg instruction
SlowSequence '<<<<<<<<<<NOTE: Begins with SlowSequence
  Scan(1,Sec,0,0)
    If TimeIntoInterval(9,24,Hr) Then SW12(1)    'Modem on at 9:00 AM (900 hours)
    If TimeIntoInterval(17,24,Hr) Then SW12(0)   'Modem off at 5:00 PM (1700 hours)
  NextScan
'
'<<<<<<<<<<<<<<<<<<<<<<<<NOTE: No EndProg instruction
```

7.8.4.10.4 Declaring Subroutines

Function() / **EndFunction** instructions allow you to create a customized CRBasic instruction. The declaration is similar to a subroutine declaration.

7.8.4.10.5 Declaring Incidental Sequences

A sequence is two or more statements of code. Data-table sequences are essential features of nearly all programs. Although used less frequently, subroutine and function sequences also have a general purpose nature. In contrast, the following sequences are used only in specific applications.

Shut-Down Sequences

The **ShutDownBegin** / **ShutDownEnd** instructions are used to define code that will execute whenever the currently running program is shutdown by prescribed means. More information is available in *CRBasic Editor Help*.

Dial Sequences

The **DialSequence** / **EndDialSequence** instructions are used to define the code necessary to route packets to a PakBus® device. More information is available in *CRBasic Editor Help*.

Modem-Hangup Sequences

The **ModemHangup** / **EndModemHangup** instructions are used to enclose code that should be run when a COM port hangs up communication. More information is available in *CRBasic Editor Help*.

Web-Page Sequences

The **WebPageBegin** / **WebPageEnd** instructions are used to declare a web page that is displayed when a request for the defined HTML page comes from an external source. More information is available in *CRBasic Editor Help*.

7.8.4.11 Execution and Task Priority

Execution of program instructions is divided among the following three tasks:

- Measurement task — rigidly timed measurement of sensors connected directly to the CR800
- CDM task — rigidly timed measurement and control of *CDM* (p. 483) peripheral devices
- SDM task — rigidly timed measurement and control of *SDM* (p. 500) peripheral devices
- Processing task — converts measurements to numbers represented by engineering units, performs calculations, stores data, makes decisions to actuate controls, and performs serial I/O communication.

Instructions or commands that are handled by each task are listed in table *Program Tasks* (p. 150).

These tasks are executed in either pipeline or sequential mode. When in pipeline mode, tasks run more or less in parallel. When in sequential mode, tasks run more or less in sequence. When a program is compiled, the CR800 evaluates the

program and automatically determines which mode to use. Using the **PipelineMode** or **SequentialMode** instruction at the beginning of the program will force the program into one mode or the other. Mode information is included in a message returned by the datalogger, which is displayed by the *datalogger support software* (p. 631). The *CRBasic Editor* pre-compiler returns a similar message.

Note A program can be forced to run in sequential or pipeline mode by placing the **SequentialMode** or **PipelineMode** instruction in the declarations section of the program.

Some tasks in a program may have higher priorities than others. Measurement tasks generally take precedence over all others. Task priorities are different for pipeline mode and sequential mode.

Table 17. Program Tasks

Measurement Task	*Digital Task*	*Processing Task*
• Analog measurements • Excitation • Read pulse counters • Read control ports (**GetPort()**) • Set control ports (**SetPort()**) • **VibratingWire()** • **PeriodAvg()** • **CS616()** • **Calibrate()**	• SDM instructions, except **SDMSI04()** and **SDMI016()** • CDM instructions / CPI devices.	• Processing • Output • Serial I/O • **SDMSIO4()** • **SDMIO16()** • **ReadIO()** • **WriteIO()** • Expression evaluation and variable setting in measurement and SDM instructions

7.8.4.11.1 Pipeline Mode

Pipeline mode handles measurement, most digital, and processing tasks separately, and possibly simultaneously. Measurements are scheduled to execute at exact times and with the highest priority, resulting in more precise timing of measurement, and usually more efficient processing and power consumption.

Pipeline scheduling requires that the program be written such that measurements are executed every scan. Because multiple tasks are taking place at the same time, the sequence in which the instructions are executed may not be in the order in which they appear in the program. Therefore, conditional measurements are not allowed in pipeline mode. Because of the precise execution of measurement instructions, processing in the current scan (including update of public variables and data storage) is delayed until all measurements are complete. Some processing, such as transferring variables to control instructions, like **PortSet()** and **ExciteV()**, may not be completed until the next scan.

When a condition is true for a task to start, it is put in a queue. Because all tasks are given the same priority, the task is put at the back of the queue. Every 10 ms (or faster if a new task is triggered) the task currently running is paused and put at the back of the queue, and the next task in the queue begins running. In this way, all tasks are given equal processing time by the CR800.

All tasks are given the same general priority. However, when a conflict arises between tasks, program execution adheres to the priority schedule in table *Pipeline Mode Task Priorities* (p. 151).

Table 18. Pipeline Mode Task Priorities
1. Measurements in main program
2. Background calibration
3. Measurements in slow sequences
4. Processing tasks

7.8.4.11.2 Sequential Mode

Sequential mode executes instructions in the sequence in which they are written in the program. Sequential mode may be slower than pipeline mode since it executes only one line of code at a time. After a measurement is made, the result is converted to a value determined by processing arguments that are included in the measurement command, and then program execution proceeds to the next instruction. This line-by-line execution allows writing conditional measurements into the program.

Note The exact time at which measurements are made in sequential mode may vary if other measurements or processing are made conditionally, if there is heavy communication activity, or if other interrupts, such as accessing a Campbell Scientific mass storage device , occur.

When running in sequential mode, the datalogger uses a queuing system for processing tasks similar to the one used in pipeline mode. The main difference when running a program in sequential mode is that there is no pre-scheduling of measurements; instead, all instructions are executed in the programmed order.

A priority scheme is used to avoid conflicting use of measurement hardware. The main scan has the highest priority and prevents other sequences from using measurement hardware until the main scan, including processing, is complete. Other tasks, such as processing from other sequences and communications, can occur while the main sequence is running. Once the main scan has finished, other sequences have access to measurement hardware with the order of priority being the background calibration sequence followed by the slow sequences in the order they are declared in the program.

Note Measurement tasks have priority over other tasks such as processing and communication to allow accurate timing needed within most measurement instructions.

Care must be taken when initializing variables when multiple sequences are used in a program. If any sequence relies on something (variable, port, etc.) that is initialized in another sequence, there must be a handshaking scheme placed in the CRBasic program to make sure that the initializing sequence has completed

before the dependent task can proceed. This can be done with a simple variable or even a delay, but understand that the CR1000 operating system will not do this handshaking between independent tasks.

A similar concern is the reuse of the same variable in multiple tasks. Without some sort of messaging between the two tasks placed into the CRBasic program, unpredictable results are likely to occur. The **SemaphoreGet()** and **SemaphoreRelease()** instruction pair provide a tool to prevent unwanted access of an object (variable, COM port, etc.) by another task while the object is in use. Consult *CRBasic Editor Help* for information on using **SemaphoreGet()** and **SemaphoreRelease()**.

7.8.4.12 Execution Timing

Timing of program execution is regulated by timing instructions listed in the following table.

Table 19. Program Timing Instructions

Instructions	*General Guidelines*	*Syntax Form*

Scan() / NextScan	Use in most programs. Begins / ends the main scan.	`BeginProg`
		`  Scan()`
		`  '.`
		`  '.`
		`  '.`
		`  NextScan`
		`EndProg`

SlowSequence / EndSequence	Use when measurements or processing must run at slower frequencies than that of the main program.	`BeginProg`
		`  Scan()`
		`  '.`
		`  '.`
		`  '.`
		`  NextScan`
		`  SlowSequence`
		`  Scan()`
		`  '.`
		`  '.`
		`  '.`
		`  NextScan`
		`  EndSequence`
		`EndProg`

SubScan / NextSubScan	Use when measurements or processing must run at faster frequencies than that of the main program.	`BeginProg`
		`  Scan()`
		`  '.`
		`  '.`
		`  '.`
		`  SubScan()`
		`  '.`
		`  '.`
		`  '.`
		`  NextSubScan`
		`  NextScan`
		`EndProg`

7.8.4.12.1 Scan() / NextScan

Simple CR800 programs are often built entirely within a single **Scan()** / **NextScan** structure, with only variable and data-table declarations outside the scan. **Scan()** / **NextScan** creates an infinite loop; each periodic pass through the loop is synchronized to the CR800 clock. **Scan()** parameters allow modification of the period in 10 ms increments up to 24 hours. As shown in CRBasic example *BeginProg / Scan() / NextScan / EndProg Syntax* (p. 153), the CRBasic program may be relatively short.

CRBasic Example 14. BeginProg / Scan() / NextScan / EndProg Syntax

```
'This program example demonstrates the use of BeginProg/EndProg and Scan()/NextScan syntax.

Public PanelTemp_

DataTable(PanelTempData,True,-1)
  DataInterval(0,1,Min,10)
  Sample(1,PanelTemp_,FP2)
EndTable

BeginProg '                    <<<<<<<BeginProg
  Scan(1,Sec,3,0) '            <<<<<<<  Scan
    PanelTemp(PanelTemp_,250)
    CallTable PanelTempData
  NextScan '                   <<<<<<<  NextScan
EndProg '                      <<<<<<<EndProg
```

Scan() determines how frequently instructions in the program are executed, as shown in the following CRBasic code snip:

```
'Scan(Interval, Units, BufferSize, Count)
Scan(1,Sec,3,0)
    'CRBasic instructions go here
ExitScan
```

Scan() has four parameters:

- ***Interval*** — the interval between scans. Interval is 10 ms ≤ ***Interval*** ≤ 1 day.
- ***Units*** — the time unit for the interval.
- ***BufferSize*** — the size (number of scans) of a buffer in RAM that holds the raw results of measurements. When running in pipeline mode, using a buffer allows the processing in the scan to lag behind measurements at times without affecting measurement timing. Use of the *CRBasic Editor* default size is normal. Refer to section *SkippedScan* (p. 463) for troubleshooting tips.
- ***Count*** — number of scans to make before proceeding to the instruction following **NextScan**. A count of ***0*** means to continue looping forever (or until **ExitScan**). In the example in CRBasic example Scan Syntax, the scan is one second, three scans are buffered, and measurements and data storage continue indefinitely.

7.8.4.12.2 SlowSequence / EndSequence

Slow sequences include automatic and user entered sequences. Background calibration is an automatic slow sequence. A

User-entered slow sequences are declared with the **SlowSequence** instruction and run outside the main-program scan. Slow sequences typically run at a slower rate than the main scan. Up to four slow-sequence scans can be defined in a program.

Instructions in a slow-sequence scan are executed when the main scan is not active. When running in pipeline mode, slow-sequence measurements are spliced in after measurements in the main program, as time allows. Because of this splicing, measurements in a slow sequence may span across multiple-scan intervals in the main program. When no measurements need to be spliced, the slow-sequence scan will run independent of the main scan, so slow sequences with no measurements can run at intervals ≤ main-scan interval (still in 10 ms increments) without skipping scans. When measurements are spliced, checking for skipped slow scans is done after the first splice is complete rather than immediately after the interval comes true.

In sequential mode, all instructions in slow sequences are executed as they occur in the program according to task priority.

Background calibration is an automatic, slow-sequence scan, as is the watchdog task.

Read More See the section *CR800 Auto Calibration — Overview* *(p. 91).*

7.8.4.12.3 SubScan() / NextSubScan

SubScan() / **NextSubScan** are used in the control of analog multiplexers (see the appendix *Analog Multiplexers* *(p. 622)* for information on available analog multiplexers) or to measure analog inputs at a faster rate than the program scan. **SubScan()** / **NextSubScan** can be used in a **SlowSequenc / EndSequence** with an interval of **0**. **SubScan** cannot be nested. **PulseCount** or SDM measurement cannot be used within a sub scan.

7.8.4.12.4 Scan Priorities in Sequential Mode

Note Measurement tasks have priority over other tasks such as processing and communication to allow accurate timing needed within most measurement instructions.

A priority scheme is used in sequential mode to avoid conflicting use of measurement hardware. As illustrated in figure *Sequential-Mode Scan Priority Flow Diagrams* *(p. 156),* the main scan sequence has the highest priority. Other sequences, such as slow sequences and calibration scans, must wait to access measurement hardware until the main scan, including measurements and processing, is complete.

Main Scans

Execution of the main scan usually occurs quickly, so the processor may be idle much of the time. For example, a weather-measurement program may scan once per second, but program execution may only occupy 250 ms, leaving 75% of available scan time unused. The CR800 can make efficient use of this interstitial-scan time to optimize program execution and communication control. Unless disabled, or crowded out by a too demanding schedule, self-calibration (see *CR800 Auto Calibration — Overview* *(p. 91))* has priority and uses some interstitial

scan time. If self-calibration is crowded out, a warning message is issued by the CRBasic pre-compiler. Remaining priorities include slow-sequence scans in the order they are programmed and digital triggers. Following is a brief introduction to the rules and priorities that govern use of interstitial-scan time in sequential mode. Rules and priorities governing pipeline mode are somewhat more complex and are not expanded upon.

Permission to proceed with a measurement is granted by the measurement *semaphore* (p. 501). Main scans with measurements have priority to acquire the semaphore before measurements in a calibration or slow-sequence scan. The semaphore is taken by the main scan at its beginning if there are measurements included in the scan. The semaphore is released only after the last instruction in the main scan is executed.

Slow-Sequence Scans

Slow-sequence scans begin after a **SlowSequence** instruction. They start processing tasks prior to a measurement but stop to wait when a measurement semaphore is needed. Slow sequences release the *semaphore* (p. 501) after complete execution of each measurement instruction to allow the main scan to acquire the semaphore when it needs to start. If the measurement semaphore is set by a slow-sequence scan and the beginning of a main scan gets to the top of the queue, the main scan will not start until it can acquire the semaphore; it waits for the slow sequence to release the semaphore. A slow-sequence scan does not hold the semaphore for the whole of its scan. It releases the semaphore after each use of the hardware.

WaitDigTrig Scans

Read More See *Synchronizing Measurements* (p. 346).

Main scans and slow sequences usually trigger at intervals defined by the **Scan()** instruction. Some applications, however, require the main- or slow-sequence scan to be started by an external digital trigger such as a 5 Vdc pulse on a control port. The **WaitDigTrig()** instruction activates a program when an external trigger is detected. **WaitDigTrig()** gives priority to begin a scan, but the scan will execute and acquire the *semaphore* (p. 501) according to the rules stated in *Main Scans* (p. 154) and *Slow-Sequence Scans* (p. 155). Any processing will be time sliced with processing from other sequences. Every time the program encounters **WaitDigTrig()**, it will stop and wait to be triggered.

Note **WaitDigTrig()** can be used to program a CR800 to control another CR800.

Figure 42. Sequential-Mode Scan Priority Flow Diagrams

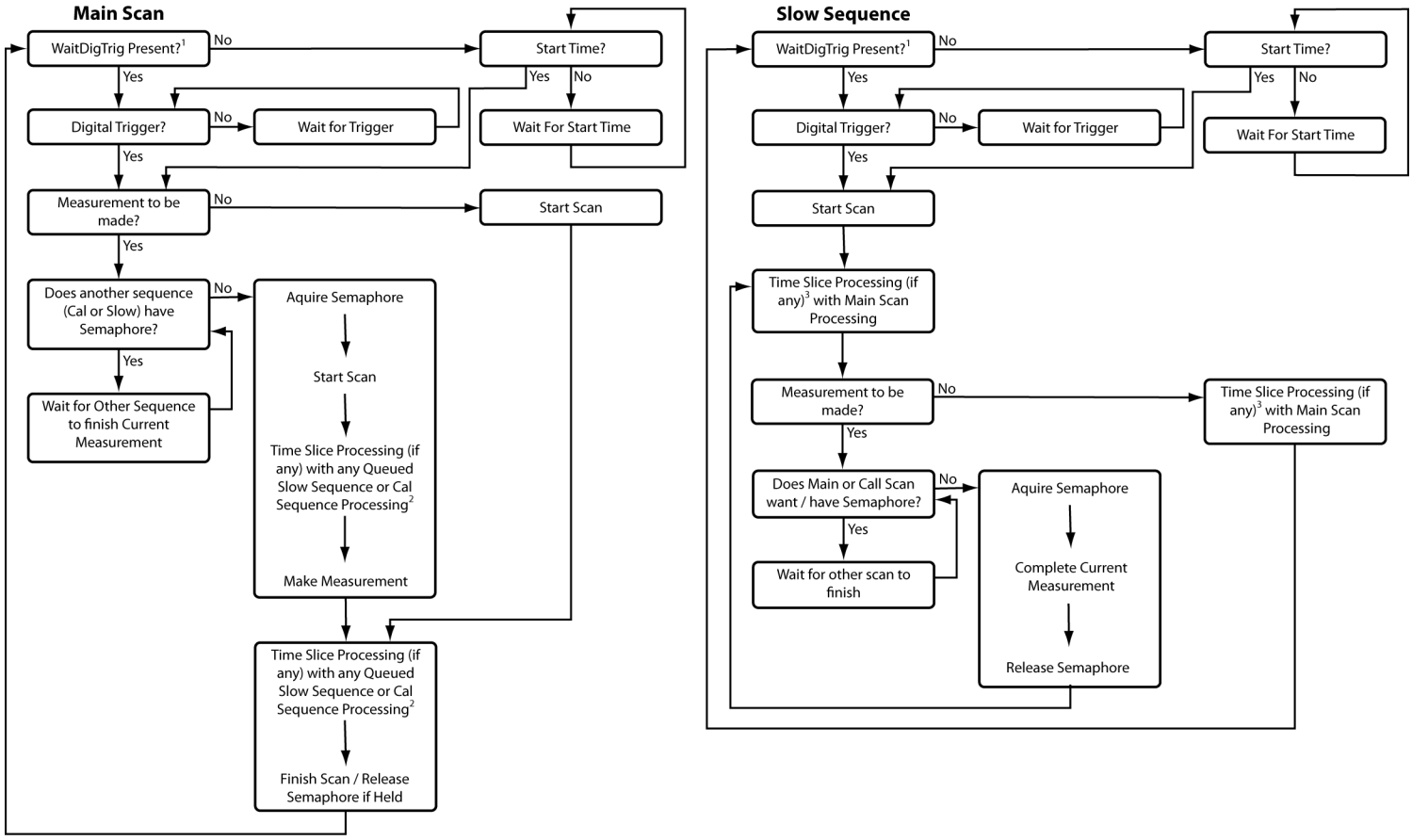

1- Program with WaitDigTrig() immediately after Scan()

2- Processing (if any) time sliced with slow sequence processing only if no measurements in main scan

3- Processing time sliced with main scan processing if no measurements in main scan, otherwise time sliced with whole main scans

7.8.4.13 Programming Instructions

In addition to BASIC syntax, additional instructions are included in CRBasic to facilitate measurements and store data. The section *CRBasic Programming Instructions* *(p. 511)* contains a comprehensive list of these instructions.

7.8.4.13.1 Measurement and Data-Storage Processing

CRBasic instructions have been created for making measurements and storing data. Measurement instructions set up CR800 hardware to make measurements and store results in variables. Data-storage instructions process measurements into averages, maxima, minima, standard deviation, FFT, etc.

Each instruction is a keyword followed by a series of informational parameters needed to complete the procedure. For example, the instruction for measuring CR800 panel temperature is:

```
PanelTemp(Dest,Integ)
```

PanelTemp is the keyword. Two parameters follow: ***Dest***, a destination variable name in which the temperature value is stored; and ***Integ***, a length of time to integrate the measurement. To place the panel temperature measurement in the variable ***RefTemp***, using a 250 µs integration time, the syntax is as shown in CRBasic example *Measurement Instruction Syntax* (p. 157).

CRBasic Example 15. Measurement Instruction Syntax

```
'This program example demonstrates the use of a single measurement instruction.  In this
'case, the program measures the temperature of the CR800 wiring panel.

Public RefTemp 'Declare variable to receive instruction

BeginProg
  Scan(1,Sec,3,0)
    PanelTemp(RefTemp, 250) '<<<<<<Instruction to make measurement
  NextScan
EndProg
```

7.8.4.13.2 Argument Types

Most CRBasic commands or instructions, have sub-commands or parameters. Parameters are populated by the programmer with arguments. Many instructions have parameters that allow different types of arguments. Common argument types are listed below. Allowed argument types are specifically identified in the description of each instruction in *CRBasic Editor Help*.

- Constant, or Expression that evaluates as a constant
- Variable
- Variable or Array
- Constant, Variable, or Expression
- Constant, Variable, Array, or Expression
- Name
- Name or list of Names
- Variable, or Expression
- Variable, Array, or Expression

7.8.4.13.3 Names in Arguments

Table *Rules for Names* (p. 157) lists the maximum length and allowed characters for the names for variables, arrays, constants, etc. The *CRBasic Editor* pre-compiler will identify names that are too long or improperly formatted.

Caution Concerning characters allowed in names, characters not listed in in the table, *Rules for Names*, may appear to be supported in a specific operating system. However, they may not be supported in future operating systems.

Table 20. Rules for Names

Name Category[1]	*Maximum Length (number of characters)*	*Allowed characters*
Variable or array	39	Letters A to Z, a to z, _ (underscore), and numbers 0 to 9. Names must start with a letter or underscore. CRBasic is not case sensitive. Units are excepted from the above rules. Since units are strings that ride along with the data, they are not subjected to the stringent syntax checking that is applied to variables, constants, subroutines, tables, and other names.
Constant	38	
Units	38	
Alias	39	
Station name	64	
Data-table name	20	
Field name	39	
Field-name description	64	

[1]Variables, constants, units, aliases, station names, field names, data table names, and file names can share identical names; that is, once a name is used, it is reserved only in that category. See the section *Predefined Constants* (p. 136) for another naming limitation.

7.8.4.14 Expressions in Arguments

Read More See *Programming Express Types* (p. 158) for more information on expressions.

Many CRBasic instruction parameters allow the entry of arguments as expressions. If an expression is a comparison, it will return **-1** if true and **0** if false. (See the section *Logical Expressions* (p. 162)). The following code snip shows the use of an expressions as an argument in the ***TrigVar*** parameter of the **DataTable()** instruction:

```
'DataTable(Name, TrigVar, Size)
DataTable(Temp, TC > 100, 5000)
```

When the trigger is ***TC > 100***, a thermocouple temperature greater than 100 sets the trigger to ***True*** and data are stored.

7.8.4.15 Programming Expression Types

An expression is a series of words, operators, or numbers that produce a value or result. Expressions are evaluated from left to right, with deference to precedence rules. The result of each stage of the evaluation is of type Long (integer, 32 bits) if the variables are of type Long (constants are integers) and the functions give integer results, such as occurs with **INTDV()**. If part of the equation has a floating point variable or constant (24 bits), or a function that results in a floating point, the rest of the expression is evaluated using floating-point, 24-bit math, even if the final function is to convert the result to an integer, so precision can be lost; for example, **INT((rtYear-1993)*.25)**. This is a critical feature to consider when, 1) trying to use integer math to retain numerical resolution beyond the limit of floating point variables, or 2) if the result is to be tested for equivalence against another value. See section *Floating-Point Arithmetic* (p. 159) for limits.

Two types of expressions, mathematical and programming, are used in CRBasic. A useful property of expressions in CRBasic is that they are equivalent to and

often interchangeable with their results.

Consider the expressions:

```
x = (z * 1.8) + 32 '(mathematical expression)
If x = 23 then y = 5 '(programming expression)
```

The variable x can be omitted and the expressions combined and written as:

```
If (z * 1.8 + 32 = 23) then y = 5
```

Replacing the result with the expression should be done judiciously and with the realization that doing so may make program code more difficult to decipher.

7.8.4.15.1 Floating-Point Arithmetic

Variables and calculations are performed internally in single-precision IEEE four-byte floating point with some operations calculated in double precision.

Note Single-precision float has 24 bits of mantissa. Double precision has a 32-bit extension of the mantissa, resulting in 56 bits of precision. Instructions that use double precision are **AddPrecise()**, **Average()**, **AvgRun()**, **AvgSpa()**, **CovSpa()**, **MovePrecise()**, **RMSSpa()**, **StdDev()**, **StdDevSpa()**, **Totalize()**, and **TotRun()**.

Floating-point arithmetic is common in many electronic, computational systems, but it has pitfalls high-level programmers should be aware of. Several sources discuss floating-point arithmetic thoroughly. One readily available source is the topic *Floating Point* at www.wikipedia.org. In summary, CR800 programmers should consider at least the following:

- Floating-point numbers do not perfectly mimic real numbers.
- Floating-point arithmetic does not perfectly mimic true arithmetic.
- Avoid use of equality in conditional statements. Use >= and <= instead. For example, use **If X >= Y then do** rather than **If X = Y then do**.
- When programming extended-cyclical summation of non-integers, use the **AddPrecise()** instruction. Otherwise, as the size of the sum increases, fractional addends will have an ever decreasing effect on the magnitude of the sum, because normal floating-point numbers are limited to about 7 digits of resolution.

7.8.4.15.2 Mathematical Operations

Mathematical operations are written out much as they are algebraically. For example, to convert Celsius temperature to Fahrenheit, the syntax is:

```
TempF = TempC * 1.8 + 32
```

Read More Code space can be conserved while filling an array or partial array with the same value. See an example of how this is done in the CRBasic example Use of Move() to Conserve Code Space. CRBasic example *Use of Variable Arrays to Conserve Code Space* (p. 160) shows example code to convert twenty temperatures in a variable array from °C to °F.

CRBasic Example 16. Use of Move() to Conserve Code Space

```
Move(counter(1),6,0,1)                    'Reset six counters to zero.  Keep array
                                          'filled with the ten most current readings
Move(TempC(2),9,TempC(1),9)               'Shift previous nine readings to make room
                                          'for new measurement
'New measurement:
TCDiff(TempC(1),1,mV2_5C,8,TypeT,PTemp,True,0,_60Hz,1.0,0)
```

CRBasic Example 17. Use of Variable Arrays to Conserve Code Space

```
For I = 1 to 20
  TCTemp(I) = TCTemp(I) * 1.8 + 32
Next I
```

7.8.4.15.3 Expressions with Numeric Data Types

FLOATs, **LONG**s and **Boolean**s are cross-converted to other data types, such as **FP2**, by using **'='**.

Boolean from FLOAT or LONG

When a **FLOAT** or **LONG** is converted to a **Boolean** as shown in CRBasic example *Conversion of FLOAT / LONG to Boolean* (p. 160), zero becomes false (**0**) and non-zero becomes true (**-1**).

CRBasic Example 18. Conversion of FLOAT / LONG to Boolean

```
'This program example demonstrates conversion of Float and Long data types to Boolean
'data type.

Public Fa As Float
Public Fb As Float
Public L As Long
Public Ba As Boolean
Public Bb As Boolean
Public Bc As Boolean

BeginProg
  Fa = 0
  Fb = 0.125
  L = 126
  Ba = Fa                 'This will set Ba = False (0)
  Bb = Fb                 'This will Set Bb = True (-1)
  Bc = L                  'This will Set Bc = True (-1)
EndProg
```

FLOAT from LONG or Boolean

When a **LONG** or **Boolean** is converted to **FLOAT**, the integer value is loaded into the **FLOAT**. Booleans are converted to **-1** or **0**. **LONG** integers greater than 24 bits (16,777,215; the size of the mantissa for a **FLOAT**) will lose resolution when converted to **FLOAT**.

LONG from FLOAT or Boolean

When converted to **Long, Boolean** is converted to **-1** or **0**. When a **FLOAT** is converted to a **LONG**, it is truncated. This conversion is the same as the **INT** function (*Arithmetic Functions* (p. 542)). The conversion is to an integer equal to or less than the value of the float; for example, **4.6** becomes **4** and –**4.6** becomes –**5**).

If a **FLOAT** is greater than the largest allowable **LONG** (+2,147,483,647), the integer is set to the maximum. If a **FLOAT** is less than the smallest allowable **LONG** (–2,147,483,648), the integer is set to the minimum.

Integers in Expressions

LONGs are evaluated in expressions as integers when possible. CRBasic example *Evaluation of Integers* (p. 161) illustrates evaluation of integers as **LONG**s and **FLOAT**s.

CRBasic Example 19. Evaluation of Integers

```
'This program example demonstrates the evaluation of integers.

Public I As Long
Public X As Float

BeginProg
  I = 126
  X = (I+3) * 3.4
  'I+3 is evaluated as an integer, then converted to Float data type before it is
  'multiplied by 3.4.
EndProg
```

Constants Conversion

Constants are not declared with a data type, so the CR800 assigns the data type as needed. If a constant (either entered as a number or declared with **CONST**) can be expressed correctly as an integer, the compiler will use the type that is most efficient in each expression. The integer version is used if possible, for example, if the expression has not yet encountered a **FLOAT**. CRBasic example *Constants to LONGs or FLOATs* (p. 161) lists a programming case wherein a value normally considered an integer (10) is assigned by the CR800 to be **As FLOAT**.

CRBasic Example 20. Constants to LONGs or FLOATs

```
'This program example demonstrates conversion of constants to Long or Float data types.

Public L As Long
Public F1 As Float
Public F2 As Float
Const ID = 10

BeginProg
  F1 = F2 + ID
  L = ID * 5
EndProg
```

In CRBasic example *Constants to LONGs or FLOATs* (p. 161), **I** is an integer. **A1** and **A2** are **FLOATS**. The number 5 is loaded **As FLOAT** to add efficiently with constant ID, which was compiled **As FLOAT** for the previous expression to avoid

an inefficient runtime conversion from **LONG** to **FLOAT** before each floating point addition.

7.8.4.15.4 Logical Expressions

Measurements can indicate absence or presence of an event. For example, an RH measurement of 100% indicates a condensation event such as fog, rain, or dew. The CR800 can render the state of the event into binary form for further processing, so the event is either occurring (true), or the event has not occurred (false).

True = -1, False = 0

In all cases, the argument **0** is translated as **FALSE** in logical expressions; by extension, any non-zero number is considered "non-FALSE." However, the argument **TRUE** is predefined in the CR800 operating system to only equal **-1**, so only the argument **-1** is *always* translated as **TRUE**. Consider the expression

```
If Condition(1) = TRUE Then...
```

This condition is true only when Condition(1) = **-1**. If Condition(1) is any other non-zero, the condition will not be found true because the constant **TRUE** is predefined as **-1** in the CR800 system memory. By entering **= TRUE**, a literal comparison is done. So, to be absolutely certain a function is true, it must be set to **TRUE** or **-1**.

Note **TRUE** is **-1** so that every bit is set high (-1 is &B11111111 for all four bytes). This allows the **AND** operation to work correctly. The **AND** operation does an AND boolean function on every bit, so **TRUE AND X** will be non-zero if at least one of the bits in X is non-zero (if X is not zero). When a variable of data type BOOLEAN is assigned any non-zero number, the CR800 internally converts it to **-1**.

The CR800 is able to translate the conditions listed in table *Binary Conditions of TRUE and FALSE* (p. 162) to binary form (-1 or 0), using the listed instructions and saving the binary form in the memory location indicated. Table *Logical Expression Examples* (p. 163) explains some logical expressions.

Non-Zero = True (Sometimes)

Any argument other than ***0*** or ***-1*** will be translated as ***TRUE*** in some cases and ***FALSE*** in other cases. While using only ***-1*** as the numerical representation of ***TRUE*** is safe, it may not always be the best programming technique. Consider the expression

```
If Condition(1) then...
```

Since **= True** is omitted from the expression, **Condition(1)** is considered true if it equals any non-zero value.

Table 21. Binary Conditions of TRUE and FALSE

Condition	*CRBasic Instruction(s) Used*	*Memory Location of Binary Result*
Time	**TimeIntoInterval()**	Variable, System
	IfTime()	Variable, System
	TimeIsBetween()	Variable, System
Control Port Trigger	**WaitDigTrig()**	System
Communications	**VoiceBeg()**	System
	ComPortIsActive()	Variable
	PPPClose()	Variable
Measurement Event	**DataEvent()**	System

Using TRUE or FALSE conditions with logic operators such as AND and OR, logical expressions can be encoded to perform one of the following three general logic functions. Doing so facilitates conditional processing and control applications:

1. Evaluate an expression, take one path or action if the expression is true (= –1), and / or another path or action if the expression is false (= 0).
2. Evaluate multiple expressions linked with **AND** or **OR**.
3. Evaluate multiple **AND** or **OR** links.

The following commands and logical operators are used to construct logical expressions. CRBasic example *Logical Expression Examples* *(p. 163)* demonstrate some logical expressions.

- IF
- AND
- OR
- NOT
- XOR
- IMP
- IIF

Table 22. Logical Expression Examples

`If X >= 5 then Y = 0` Sets the variable Y to 0 if the expression "X >= 5" is true, i.e. if X is greater than or equal to 5. The CR800 evaluates the expression (X >= 5) and registers in system memory a **-1** if the expression is true, or a **0** if the expression is false.
`If X >= 5 OR Z = 2 then Y = 0` Sets Y = 0 if either X >= 5 or Z = 2 is true.
`If X >= 5 AND Z = 2 then Y = 0` Sets Y = 0 only if both X >= 5 and Z = 2 are true.
`If 6 then Y = 0.` **If 6** is true since **6** (a non-zero number) is returned, so Y is set to **0** every time the statement is executed.
`If 0 then Y = 0.` **If 0** is false since **0** is returned, so Y will never be set to **0** by this statement.
`Z = (X > Y).` Z equals **-1** if X > Y, or Z will equal **0** if X <= Y.

Table 22. Logical Expression Examples

The **NOT** operator complements every bit in the word. A Boolean can be FALSE (0 or all bits set to 0) or TRUE (-1 or all bits set to 1). "Complementing" a Boolean turns TRUE to FALSE (all bits complemented to 0).

Example Program

```
'(a AND b) = (26 AND 26) = (&b11010 AND &b11010) =
'&b11010. NOT (&b11010) yields &b00101.

'This is non-zero, so when converted to a
'BOOLEAN, it becomes TRUE.
Public a As LONG
Public b As LONG
Public is_true As Boolean
Public not_is_true As Boolean
Public not_a_and_b As Boolean
BeginProg
  a = 26
  b = a
  Scan (1,Sec,0,0)
    is_true = a AND b            'This evaluates to TRUE.
    not_is_true = NOT (is_true)  'This evaluates to FALSE.
    not_a_and_b = NOT (a AND b)  'This evaluates to TRUE!
  NextScan
EndProg
```

7.8.4.15.5 String Expressions

CRBasic facilitates concatenation of string variables to variables of all data types using **&** and **+** operators. To ensure consistent results, use **&** when concatenating strings. Use **+** when concatenating strings to other variable types. CRBasic example *String and Variable Concatenation* (p. 164) demonstrates CRBasic code for concatenating strings and integers. See section *String Operations* (p. 275) in the *Programming Resource Library* (p. 167) for more information on string programming.

CRBasic Example 21. String and Variable Concatenation

```
'This program example demonstrates the concatenation of variables declared As String to
'other strings and to variables declared as other data types.
'
'Declare Variables
Dim PhraseNum(2) As Long
Dim Word(15) As String * 10
Public Phrase(2) As String * 80

'Declare Data Table
DataTable(HAL,1,-1)
  DataInterval(0,15,Sec,10)

  'Write phrases to data table "Test"
  Sample(2,Phrase,String)
EndTable
```

```
'Program
BeginProg
  Scan(1,Sec,0,0)

    'Assign strings to String variables
    Word(1) = "Good"
    Word(2) = "morning"
    Word(3) = "Dave"
    Word(4) = "I'm"
    Word(5) = "sorry"
    Word(6) = "afraid"
    Word(7) = "I"
    Word(8) = "can't"
    Word(9) = "do"
    Word(10) = "that"
    Word(11) = " "
    Word(12) = ","
    Word(13) = ";"
    Word(14) = "."
    Word(15) = Chr(34)

    'Assign integers to Long variables
    PhraseNum(1) = 1
    PhraseNum(2) = 2

    'Concatenate string "1. Good morning, Dave"
    Phrase(1) = PhraseNum(1)+Word(14)+Word(11)&Word(15)&Word(1)&Word(11)&Word(2)& _
                Word(12)&Word(11)&Word(3)&Word(14)&Word(15)

    'Concatenate string "2. I'm afraid I can't do that, Dave."
    Phrase(2) = PhraseNum(2)+Word(14)&Word(11)&Word(15)&Word(4)&Word(11)&Word(6)&Word(11)& _
                Word(7)&Word(11)&Word(8)&Word(11)&Word(9)&Word(11)&Word(10)&Word(12)& _
                Word(11)&Word(3)&Word(14)&Word(15)

    CallTable HAL

  NextScan
EndProg
```

7.8.4.16 Programming Access to Data Tables

A data table is a memory location where data records are stored. Sometimes, the stored data needs to be used in the CRBasic program. For example, a program can be written to retrieve the average temperature of the last five days for further processing. CRBasic has syntax provisions facilitating access to these table data, or to meta data relating to the data table. Except when using the **GetRecord()** instruction (*Data Table Access and Management* (p. 565)), the syntax is entered directly into the CRBasic program through a variable name. The general form is:

```
TableName.FieldName_Prc(Fieldname Index, Records Back)
```

Where:

- **TableName** is the name of the data table.
- **FieldName** is the name of the variable from which the processed value is derived.
- **Prc** is the abbreviation of the name of the data process used. See table *Data Process Abbreviations* (p. 166) for a complete list of these abbreviations. This is not needed for values from **Status** or **Public** tables.

- **Fieldname Index** is the array element number in fields that are arrays (optional).
- **Records Back** is how far back into the table to go to get the value (optional). If left blank, the most recent record is acquired.

Table 23. Data Process Abbreviations

Abbreviation	*Process Name*
Tot	Totalize
Avg	Average
Max	Maximum
Min	Minimum
SMM	Sample at Max or Min
Std	Standard Deviation
MMT	Moment
No abbreviation	Sample
Hst	Histogram [1]
H4D	Histogram4D
FFT	FFT
Cov	Covariance
RFH	Rainflow Histogram
LCr	Level Crossing
WVc	WindVector
Med	Median
ETsz	ET
RSo	Solar Radiation (from ET)
TMx	Time of Max
TMn	Time of Min

[1] **Hst** is reported in the form **Hst,20,1.0000e+00,0.0000e+00,1.0000e+01** where **Hst** denotes a histogram, 20 = 20 bins, 1 = weighting factor, 0 = lower bound, 10 = upper bound.

For example, to access the number of watchdog errors, use the statement

```
wderr = status.watchdogerrors
```

where **wderr** is a declared variable, **status** is the table name, and **watchdogerrors** is the keyword for the watchdog error field.

Seven special variable names are used to access information about a table.

- **EventCount**
- **EventEnd**
- **Output**
- **Record**
- **TableFull**
- **TableSize**
- **TimeStamp**

Consult *CRBasic Editor Help* index topic *DataTable access* for complete information.

The **DataTableInformation** table also include this information. See *Status, Settings, and Data Table Information (Status/Settings/DTI)* (p. 577).

7.8.4.17 Programming to Use Signatures

Signatures help assure system integrity and security. The following resources provide information on using signatures.

- **Signature()** instruction in *Diagnostics* (p. 524)
- **RunSignature** entry in table *Signature Status/Settings/DTI* (p. 577)
- **ProgSignature** entry in table *Signature Status/Settings/DTI* (p. 577)
- **OSSignature** entry in table *Signature Status/Settings/DTI* (p. 577)
- *Security* (p. 90)

Many signatures are recorded in the **Status** table, which is a type of data table. Signatures recorded in the **Status** table can be copied to a variable using the programming technique described in the *Programming Access to Data Tables* (p. 165). Once in variable form, signatures can be sampled as part of another data table for archiving.

7.9 Programming Resource Library

This library of notes and CRBasic code addresses a narrow selection of CR800 applications. Consult a Campbell Scientific application engineer if other resources are needed.

7.9.1 Advanced Programming Techniques

7.9.1.1 Capturing Events

CRBasic example *Capturing Events* (p. 167) demonstrates programming to output data to a data table at the occurrence of an event.

CRBasic Example 22. BeginProg / Scan / NextScan / EndProg Syntax

```
'This program example demonstrates detection and recording of an event. An event has a
'beginning and an end.  This program records an event as occurring at the end of the event.
'The event recorded is the transition of a delta temperature above 3 degrees.  The event is
'recorded when the delta temperature drops back below 3 degrees.

'The DataEvent instruction forces a record in data table Event each time an
'event ends. Number of events is written to the reserved variable
'EventCount(1,1).  In this program, EventCount(1,1) is recorded in the
'OneMinute Table.

'Note : the DataEvent instruction must be used within a data table with a
'more frequent record interval than the expected frequency of the event.

'Declare Variables
Public PTemp_C, AirTemp_C, DeltaT_C
Public EventCounter
```

```
'Declare Event Driven Data Table
DataTable(Event,True,1000)
  DataEvent(0,DeltaT_C>=3,DeltaT_C<3,0)
  Sample(1,PTemp_C, FP2)
  Sample(1,AirTemp_C, FP2)
  Sample(1,DeltaT_C, FP2)
EndTable

'Declare Time Driven Data Table
DataTable(OneMin,True,-1)
  DataInterval(0,1,Min,10)
  Sample(1,EventCounter, FP2)
EndTable

BeginProg
  Scan(1,Sec,1,0)

    'Wiring Panel Temperature
    PanelTemp(PTemp_C,_60Hz)

    'Type T Thermocouple measurements:
    TCDiff(AirTemp_C,1,mV2_5C,1,TypeT,PTemp_C,True,0,_60Hz,1,0)

    'Calculate the difference between air and panel temps
    DeltaT_C = AirTemp_C - PTemp_C

    'Update Event Counter (uses special syntax Event.EventCount(1,1))
    EventCounter = Event.EventCount(1,1)

    'Call data table(s)
    CallTable(Event)
    CallTable(OneMin)

  NextScan
EndProg
```

7.9.1.2 Conditional Output

CRBasic example *Conditional Output* (p. 168) demonstrates programming to output data to a data table conditional on a trigger other than time.

CRBasic Example 23. Conditional Output

```
'This program example demonstrates the conditional writing of data to a data table.  It
'also demonstrates use of StationName() and Units instructions.

'Declare Station Name (saved to Status table)
StationName(Delta_Temp_Station)

'Declare Variables
Public PTemp_C, AirTemp_C, DeltaT_C
```

```
'Declare Units
Units PTemp_C = deg C
Units AirTemp_C = deg C
Units DeltaT_C = deg C

'Declare Output Table -- Output Conditional on Delta T >=3
'Table stores data at the Scan rate (once per second) when condition met
'because DataInterval instruction is not included in table declaration.
DataTable(DeltaT,DeltaT_C >= 3,-1)
  Sample(1,Status.StationName,String)
  Sample(1,DeltaT_C,FP2)
  Sample(1,PTemp_C,FP2)
  Sample(1,AirTemp_C,FP2)
EndTable

BeginProg
  Scan(1,Sec,1,0)
    'Measure wiring panel temperature
    PanelTemp(PTemp_C,_60Hz)

    'Measure type T thermocouple
    TCDiff(AirTemp_C,1,mV2_5C,1,TypeT,PTemp_C,True,0, _60Hz,1,0)

    'Calculate the difference between air and panel temps
    DeltaT_C = AirTemp_C - PTemp_C

    'Call data table(s)
    CallTable(DeltaT)

  NextScan
EndProg
```

7.9.1.3 Groundwater Pump Test

CRBasic example *Groundwater Pump Test* (p. 169) demonstrates:

- How to write multiple-interval data to the same data table
- Use of program-control instructions outside the **Scan()** / **NextScan** structure
- One way to execute conditional code
- Use of multiple sequential scans, each with a scan count

CRBasic Example 24. Groundwater Pump Test

```
'This program example demonstrates the use of multiple scans in a program by running a
'groundwater pump test.  Note that Scan() time units of Sec have been changed to mSec for
'this demonstration to allow the program to run its course in a short time.  To use this
'program for an actual pump test, change the Scan() instruction mSec arguments to Sec. You
'will also need to put a level measurement in the MeasureLevel subroutine.

'A groundwater pump test requires that water level be measured and recorded
'according to the following schedule:

'Minutes into Test       Data-Output Interval
'-----------------       --------------------
'      0-10                   10 seconds
'     10-30                   30 seconds
'    30-100                   60 seconds
'   100-300                  120 seconds
'  300-1000                  300 seconds
'      1000+                 600 seconds

'Declare Variables
Public PTemp
Public Batt_Volt
Public Level
Public LevelMeasureCount As Long
Public ScanCounter(6) As Long

'Declare Data Table
DataTable(LogTable,1,-1)
  Minimum(1,Batt_Volt,FP2,0,False)
  Sample(1,PTemp,FP2)
  Sample(1,Level,FP2)
EndTable

'Declare Level Measurement Subroutine
Sub MeasureLevel
  LevelMeasureCount = LevelMeasureCount + 1 'Included to show passes through sub-routine
  'Level measurement instructions goes here
EndSub

'Main Program
BeginProg

  'Minute 0 to 10 of test: 10-second data-output interval
  Scan(10,mSec,0,60) 'There are 60 10-second scans in 10 minutes
    ScanCounter(1) = ScanCounter(1) + 1 'Included to show passes through this scan
    Battery(Batt_volt)
    PanelTemp(PTemp,250)
    Call MeasureLevel

    'Call Output Tables
    CallTable LogTable
  NextScan
```

```
  'Minute 10 to 30 of test: 30-second data-output interval
  Scan(30,mSec,0,40)'There are 40 30-second scans in 20 minutes
    ScanCounter(2) = ScanCounter(2) + 1 'Included to show passes through this scan
    Battery(Batt_volt)
    PanelTemp(PTemp,250)
    Call MeasureLevel

    'Call Output Tables
    CallTable LogTable
  NextScan

  'Minute 30 to 100 of test: 60-second data-output interval
  Scan(60,mSec,0,70)'There are 70 60-second scans in 70 minutes
    ScanCounter(3) = ScanCounter(3) + 1 'Included to show passes through this scan
    Battery(Batt_volt)
    PanelTemp(PTemp,250)
    Call MeasureLevel

    'Call Output Tables
    CallTable LogTable
  NextScan

  'Minute 100 to 300 of test: 120-second data-output interval
  Scan(120,mSec,0,200)'There are 200 120-second scans in 10 minutes
    ScanCounter(4) = ScanCounter(4) + 1 'Included to show passes through this scan
    Battery(Batt_volt)
    PanelTemp(PTemp,250)
    Call MeasureLevel

    'Call Output Tables
    CallTable LogTable
  NextScan

  'Minute 300 to 1000 of test: 300-second data-output interval
  Scan(300,mSec,0,140)'There are 140 300-second scans in 700 minutes
    ScanCounter(5) = ScanCounter(5) + 1 'Included to show passes through this scan
    Battery(Batt_volt)
    PanelTemp(PTemp,250)
    Call MeasureLevel

    'Call Output Tables
    CallTable LogTable
  NextScan

  'Minute 1000+ of test: 600-second data-output interval
  Scan(600,mSec,0,0)'At minute 1000, continue 600-second scans indefinitely
    ScanCounter(6) = ScanCounter(6) + 1 'Included to show passes through this scan
    Battery(Batt_volt)
    PanelTemp(PTemp,250)
    Call MeasureLevel

    'Call Output Tables
    CallTable LogTable
  NextScan

EndProg
```

7.9.1.4 Miscellaneous Features

CRBasic example *Miscellaneous Features* (p. 172) demonstrates use of several CRBasic features: data type, units, names, event counters, flags, data-output intervals, and control.

CRBasic Example 25. Miscellaneous Program Features

```
'This program example demonstrates the use of a single measurement instruction.  In this
'case, the program measures the temperature of the CR800 wiring panel.

Public RefTemp 'Declare variable to receive instruction

BeginProg
  Scan(1,Sec,3,0)
    PanelTemp(RefTemp, 250) 'Instruction to make measurement
  NextScan
EndProg

'A program can be (and should be!) extensively documented.  Any text preceded by an
'apostrophe is ignored by the CRBasic compiler.

'One thermocouple is measured twice using the wiring panel temperature as the reference
'temperature.  The first measurement is reported in Degrees C, the second in Degrees F.
'The first measurement is then converted from Degree C to Degrees F on the subsequent
'line, the result being placed in another variable.  The difference between the panel
'reference temperature and the first measurement is calculated, the difference is then
'used to control the status of a program control flag.  Program control then
'transitions into device control as the status of the flag is used to determine the
'state of a control port that controls an LED (light emitting diode).

'Battery voltage is measured and stored just because good programming practice dictates
'it be so.

'Two data storage tables are created.  Table "OneMin" is an interval driven table that
'stores data every minute as determined by the CR1000 clock.  Table "Event" is an event
'driven table that only stores data when certain conditions are met.

'Declare Public (viewable) Variables
Public Batt_Volt As FLOAT                        'Declared as Float
Public PTemp_C                                   'Float by default
Public AirTemp_C                                 'Float by default
Public AirTemp_F                                 'Float by default
Public AirTemp2_F                                'Float by default
Public DeltaT_C                                  'Float by default
Public HowMany                                   'Float by default
Public Counter As Long                           'Declared as Long so counter does not have
                                                   'rounding error
Public SiteName As String * 16                   'Declared as String with 16 chars for a
                                                   'site name (optional)

'Declare program control flags & terms. Set the words "High" and "Low" to equal "TRUE"
'and "FALSE" respectively
Public Flag(1) As Boolean
Const High = True
Const Low = False
```

```
'Optional - Declare a Station Name into a location in the Status table.
StationName(CR1000_on_desk)

'Optional -- Declare units.  Units are not used in programming, but only appear in the
'data file header.
Units Batt_Volt = Volts
Units PTemp = deg C
Units AirTemp = deg C
Units AirTempF2 = deg F
Units DeltaT_C = deg C

'Declare an interval driven output table
DataTable(OneMin,True,-1)                        'Time driven data storage
  DataInterval(0,1,Min,0)                        'Controls the interval
  Average(1,AirTemp_C,IEEE4,0)                   'Stores temperature average in high
                                                   'resolution format
  Maximum(1,AirTemp_C,IEEE4,0,False)             'Stores temperature maximum in high
                                                   'resolution format
  Minimum(1,AirTemp_C,FP2,0,False)               'Stores temperature minimum in low
                                                   'resolution format
  Minimum(1,Batt_Volt,FP2,0,False)               'Stores battery voltage minimum in low
                                                   'resolution format
  Sample(1,Counter,Long)                         'Stores counter in integer format
  Sample(1,SiteName,String)                      'Stores site name as a string
  Sample(1,HowMany, FP2)                         'Stores how many data events in low
                                                   'resolution format
EndTable

'Declare an event driven data output table
DataTable(Event,True,1000)                       'Data table - event driven
  DataInterval(0,5,Sec,10)                       '-AND interval driven
  DataEvent(0,DeltaT_C >= 3,DeltaT_C < 3,0)      '-AND event range driven
  Maximum(1,AirTemp_C,FP2,0,False)               'Stores temperature maximum in low
                                                   'resolution format
  Minimum(1,AirTemp_C,FP2,0,False)               'Stores temperature minimum in low
                                                   'resolution format
  Sample(1,DeltaT_C, FP2)                        'Stores temp difference sample in low
                                                   'resolution format
  Sample(1,HowMany, FP2)                         'Stores how many data events in low
                                                   'resolution format
EndTable

BeginProg

  'A second way of naming a station is to load the name into a string variable.  The is
  'place here so it is executed only once, which saves a small amount of program
  'execution time.

  SiteName = "CR1000SiteName"
```

```
  Scan(1,Sec,1,0)

    'Measurements

    'Battery Voltage
    Battery(Batt_Volt)

    'Wiring Panel Temperature
    PanelTemp(PTemp_C,_60Hz)

    'Type T Thermocouple measurements:
    TCDiff(AirTemp_C,1,mV2_5C,1,TypeT,PTemp_C,True,0,_60Hz,1,0)
    TCDiff(AirTemp_F,1,mV2_5C,1,TypeT,PTemp_C,True,0,_60Hz,1.8,32)

    'Convert from degree C to degree F
    AirTemp2_F = AirTemp_C * 1.8 + 32

    'Count the number of times through the program.  This demonstrates the use of a
    'Long integer variable in counters.
    Counter = Counter + 1

    'Calculate the difference between air and panel temps
    DeltaT_C = AirTemp_C - PTemp_C

    'Control the flag based on the difference in temperature.  If DeltaT >= 3 then
    'set Flag 1 high, otherwise set it low
    If DeltaT_C >= 3 Then
      Flag(1) = high
    Else
      Flag(1) = low
    EndIf

    'Turn LED connected to Port 1 on when Flag 1 is high
    If Flag(1) = high Then
      PortSet(1,1)                              'alternate syntax:  PortSet(1,high)
    Else
      PortSet(1,0)                              'alternate syntax:  PortSet(1,low)
    EndIf

    'Count how many times the DataEvent "DeltaT_C>=3" has occurred.  The
    'TableName.EventCount syntax is used to return the number of data storage events
    'that have occurred for an event driven table.  This example looks in the data
    'table "Event", which is declared above, and reports the event count.  The (1,1)
    'after EventCount just needs to be included.
    HowMany = Event.EventCount(1,1)

    'Call Data Tables
    CallTable(OneMin)
    CallTable(Event)

  NextScan
EndProg
```

7.9.1.5 PulseCountReset Instruction

PulseCountReset is used in rare instances to force the reset or zeroing of CR800 pulse accumulators (see *Measurements — Overview* (p. 62)).

PulseCountReset is needed in applications wherein two separate **PulseCount()** instructions in separate scans measure the same pulse-input terminal. While the compiler does not allow multiple **PulseCount()** instructions in the same scan to measure the same terminal, multiple scans using the same terminal are allowed. **PulseCount()** information is not maintained globally, but for each individual instruction occurrence. So, if a program needs to alternate between fast and slow scan times, two separate scans can be used with logic to jump between them. If a **PulseCount()** is used in both scans, then a **PulseCountReset** is used prior to entering each scan.

7.9.1.6 Scaling Array

CRBasic example *Scaling Array* (p. 175) demonstrates programming to create and use a scaling array. Several multipliers and offsets are entered at the beginning of the program and then used by several measurement instructions throughout the program.

CRBasic Example 26. Scaling Array

```
'This program example demonstrates the use of a scaling array. An array of three
'temperatures are measured.  The first is expressed as degrees Celsius, the second as
'Kelvin, and the third as degrees Fahrenheit.

'Declare viewable variables
Public PTemp_C
Public Temp_C(3)
Public Count

'Declare scaling arrays as non-viewable variables
Dim Mult(3)
Dim Offset(3)

'Declare Output Table
DataTable(Min_5,True,-1)
  DataInterval(0,5,Min,0)
  Average(1,PTemp_C,FP2,0)
  Maximum(1,PTemp_C,FP2,0,0)
  Minimum(1,PTemp_C,FP2,0,0)
  Average(3,Temp_C(),FP2,0)
  Minimum(3,Temp_C(1),FP2,0,0)
  Maximum(3,Temp_C(1),FP2,0,0)
EndTable

'Begin Program
BeginProg

  'Load scaling array
  Mult(1) = 1.0 : Offset(1) = 0      'Scales 1st thermocouple temperature to Celsius
  Mult(2) = 1.0 : Offset(2) = 273.15 'Scales 2nd thermocouple temperature to Kelvin
  Mult(3) = 1.8 : Offset(3) = 32     'Scales 3rd thermocouple temperature to Fahrenheit
```

```
  Scan(5,Sec,1,0)

    'Measure reference temperature
    PanelTemp(PTemp_C,_60Hz)

    'Measure three thermocouples and scale each.  Scaling factors from the scaling array
    'are applied to each measurement because the syntax uses an argument of 3 in the Reps
    'parameter of the TCDiff() instruction and scaling variable arrays as arguments in the
    'Multiplier and Offset parameters.
    TCDiff(Temp_C(), 3, mV2_5C,1,TypeT,PTemp_C,True,0,250,Mult(),Offset())

    CallTable(Min_5)

  NextScan
EndProg
```

7.9.1.7 Signatures: Example Programs

A program signature is a unique integer calculated from all characters in a given set of code. When a character changes, the signature changes. Incorporating signature data into a the CR800 data set allows system administrators to track program changes and assure data quality. The following program signatures are available.

- text signature
- binary-runtime signature
- executable-code signatures

7.9.1.7.1 Text Signature

The text signature is the most-widely used program signature. This signature is calculated from all text in a program, including blank lines and comments. The program text signature is found in the **Status** table as ***ProgSignature***. See CRBasic example *Program Signatures* *(p. 176).*

7.9.1.7.2 Binary Runtime Signature

The binary runtime signature is calculated only from program code. It does not include comments or blank lines. See CRBasic example *Program Signatures* *(p. 176).*

7.9.1.7.3 Executable Code Signatures

Executable code signatures allow signatures to be calculated on discrete sections of executable code. Executable code is code that resides between **BeginProg** and **EndProg** instructions. See CRBasic example *Program Signatures* *(p. 176).*

CRBasic Example 27. Program Signatures

```
'This program example demonstrates how to request the program text signature (ProgSig =
Status.ProgSignature), and the
'binary run-time signature (RunSig = Status.RunSignature).  It also calculates two
'executable code segment signatures (ExeSig(1), ExeSig(2))

'Define Public Variables
Public RunSig, ProgSig, ExeSig(2),x,y
```

```
'Define Data Table
DataTable(Signatures,1,1000)
  DataInterval(0,1,Day,10)
  Sample(1,ProgSig,FP2)
  Sample(1,RunSig,FP2)
  Sample(2,ExeSig(),FP2)
EndTable

'Program
BeginProg
  ExeSig() = Signature                          'initialize executable code signature
                                                'function
  Scan(1,Sec,0,0)
    ProgSig = Status.ProgSignature              'Set variable to Status table entry
                                                '"ProgSignature"
    RunSig = Status.RunSignature                'Set variable to Status table entry
                                                '"RunSignature"
    x = 24
    ExeSig(1) = Signature                       'signature includes code since initial
                                                'Signature instruction
    y = 43
    ExeSig(2) = Signature                       'Signature includes all code since
                                                'ExeSig(1) = Signature
  CallTable Signatures
NextScan
```

7.9.1.8 Use of Multiple Scans

CRBasic example *Use of Multiple Scans* (p. 177) demonstrates the use of multiple scans. Some applications require measurements or processing to occur at an interval different from that of the main program scan. Secondary, or slow sequence, scans are prefaced with the **SlowSequence** instruction.

CRBasic Example 28. Use of Multiple Scans

```
'This program example demonstrates the use of multiple scans.  Some applications require
'measurements or processing to occur at an interval different from that of the main
'program scan.  Secondary scans are preceded with the SlowSequence instruction.

'Declare Public Variables
Public PTemp
Public Counter1

    'Declare Data Table 1
    DataTable(DataTable1,1,-1)              'DataTable1 is event driven.
                                            'The event is the scan.
      Sample(1,PTemp,FP2)
      Sample(1, Counter1, fp2)
    EndTable


'Main Program
BeginProg                                   'Begin executable section of program
  Scan(1,Sec,0,0)                           'Begin main scan
    PanelTemp(PTemp,250)
    Counter1 = Counter1 + 1
    CallTable DataTable1                    'Call DataTable1
  NextScan                                  'End main scan
```

```
  SlowSequence                                  'Begin slow sequence
    'Declare Public Variables for Secondary Scan (can be declared at head of program)
    Public Batt_Volt
    Public Counter2

    'Declare Data Table
    DataTable(DataTable2,1,-1)                  'DataTable2 is event driven.
                                                'The event is the scan.
      Sample(1,Batt_Volt,FP2)
      Sample(1,Counter2,FP2)
    EndTable

  Scan(5,Sec,0,0)                               'Begin 1st secondary scan
    Counter2 = Counter2 + 1
    Battery(Batt_Volt)
    CallTable DataTable2                        'Call DataTable2
  NextScan                                      'End slow sequence scan
EndProg                                         'End executable section of program
```

7.9.2 Compiling: Conditional Code

When a CRBasic user program is sent to the CR800, an exact copy of the program is saved as a file on the *CPU: drive* (p. 352). A binary version of the program, the "operating program", is created by the CR800 compiler and written to *Operating Memory* (p. 353). This is the program version that runs the CR800.

CRBasic allows definition of conditional code, preceded by a hash character (#), in the CRBasic program that is compiled into the operating program depending on the conditional settings. In addition, all Campbell Scientific datalogger (except the CR200) accept program files, or **Include()** instruction files, with .DLD extensions. This feature circumvents system filters that look at file extensions for specific loggers; it makes possible the writing of a single file of code to run on multiple models of CRBasic dataloggers.

Note Do not confuse CRBasic files with .DLD extensions with files of .DLD type used by legacy Campbell Scientific dataloggers.

As an example, pseudo code using this feature might be written as:

```
#Const Destination = LoggerType
#If Destination = 3000 Then
  <code specific to the CR3000>
#ElseIf Destination = 1000 Then
  <code specific to the CR1000>
#ElseIf Destination = 800 Then
  <code specific to the CR800>
#ElseIf Destination = 6 Then
  <code specific to the CR6>
#Else
  <code to include otherwise>
#EndIf
```

This logic allows a simple change of a constant to direct, for instance, which measurement instructions to include.

CRBasic Editor now features a pre-compile option that enables the creation of a CRBasic text file with only the desired conditional statements from a larger master program. This option can also be used at the pre-compiler command line

by using -p <outfile name>. This feature allows the smallest size program file possible to be sent to the CR800, which may help keep costs down over very expensive telecommunication links.

CRBasic example *Conditional Code* (p. 179) shows a sample program that demonstrates use of conditional compilation features in CRBasic. Within the program are examples showing the use of the predefined **LoggerType** constant and associated predefined datalogger constants (**6**, **800**, **1000**, and **3000**).

CRBasic Example 29. Conditional Code

```
'This program example demonstrates program compilation than is conditional on datalogger
'model and program speed. Key instructions include #If, #ElseIf, #Else and #EndIf.

'Set program options based on:
'  LoggerType, which is a constant predefined in the CR800 operating system
'  ProgramSpeed, which is defined in the following statement:
Const ProgramSpeed = 2

#If ProgramSpeed = 1
  Const ScanRate = 1                        '1 second
  Const Speed = "1 Second"
#ElseIf ProgramSpeed = 2
  Const ScanRate = 10                       '10 seconds
  Const Speed = "10 Second"
#ElseIf ProgramSpeed = 3
  Const ScanRate = 30                       '30 seconds
  Const Speed = "30 Second"
#Else
  Const ScanRate = 5                        '5 seconds
  Const Speed = "5 Second"
#EndIf
'Public Variables
Public ValueRead, SelectedSpeed As String * 50

'Main Program
BeginProg

  'Return the selected speed and logger type for display.
  #If LoggerType = 3000
    SelectedSpeed = "CR3000 running at " & Speed & " intervals."
  #ElseIf LoggerType = 1000
    SelectedSpeed = "CR1000 running at " & Speed & " intervals."
  #ElseIf LoggerType = 800
    SelectedSpeed = "CR800 running at " & Speed & " intervals."
  #ElseIf LoggerType = 6
    SelectedSpeed = "CR6 running at " & Speed & " intervals."
  #Else
    SelectedSpeed = "Unknown Logger " & Speed & " intervals."
  #EndIf

  'Open the serial port
  SerialOpen(ComC1,9600,10,0,10000)

  'Main Scan
  Scan(ScanRate,Sec,0,0)
    'Measure using different parameters and a different SE channel depending
    'on the datalogger type the program is running in.
```

```
    #If LoggerType = 3000
      'This instruction is used if the datalogger is a CR3000
      VoltSe(ValueRead,1,mV1000,22,0,0,_50Hz,0.1,-30)
    #ElseIf LoggerType = 1000
      'This instruction is used if the datalogger is a CR1000
      VoltSe(ValueRead,1,mV2500,12,0,0,_50Hz,0.1,-30)
    #ElseIf LoggerType = 800
      'This instruction is used if the datalogger is a CR800 Series
      VoltSe(ValueRead,1,mV2500,3,0,0,_50Hz,0.1,-30)
    #ElseIf LoggerType = 6
      'This instruction is used if the datalogger is a CR6 Series
      VoltSe(ValueRead,1,mV1000,U3,0,0,50,0.1,-30)
    #Else
      ValueRead = NAN
    #EndIf
  NextScan

EndProg
```

7.9.3 Displaying Data: Custom Menus — Details

Related Topics:
- *Custom Menus — Overview* (p. 83, p. 555)
- *Data Displays: Custom Menus — Details* (p. 180)
- *Custom Menus — Instruction Set* (p. 555)
- *Keyboard Display — Overview* (p. 82)
- *CRBasic Editor Help* for **DisplayMenu()**

Menus for the CR1000KD Keyboard Display can be customized to simplify routine operations. Viewing data, toggling control functions, or entering notes are common applications. Individual menu screens support up to eight lines of text with up to seven variables.

Use the following CRBasic instructions. Refer to *CRBasic Editor Help* for complete information.

DisplayMenu()

Marks the beginning and end of a custom menu. Only one allowed per program.

Note Label must be at least six characters long to mask default display clock.

EndMenu

Marks the end of a custom menu. Only one allowed per program.

DisplayValue()

Defines a label and displays a value (variable or data table value) not to be edited, such as a measurement.

MenuItem()

Defines a label and displays a variable to be edited by typing or from a pick list defined by MenuPick ().

MenuPick()

Creates a pick list from which to edit a **MenuItem()** variable. Follows

immediately after **MenuItem()**. If variable is declared **As Boolean**, **MenuPick()** allows only True or False or declared equivalents. Otherwise, many items are allowed in the pick list. Order of items in list is determined by order of instruction; however, item displayed initially in **MenuItem()** is determined by the value of the item.

SubMenu() / EndSubMenu

Defines the beginning and end of a second-level menu.

Note SubMenu() label must be at least six characters long to mask default display clock.

CRBasic example *Custom Menus* (p. 183) lists CRBasic programming for a custom menu that facilitates viewing data, entering notes, and controlling a device. Following is a list of figures that show the organization of the custom menu that is programmed using CRBasic example *Custom Menus* (p. 183).

Custom Menu Example — Home Screen (p. 181)
Custom Menu Example — View Data Window (p. 181)
Custom Menu Example — Make Notes Sub Menu (p. 182)
Custom Menu Example — Predefined Notes Pick List (p. 182)
Custom Menu Example — Free Entry Notes Window (p. 182)
Custom Menu Example — Accept / Clear Notes Window (p. 182)
Custom Menu Example — Control Sub Menu (p. 183)
Custom Menu Example — Control LED Pick List (p. 183)
Custom Menu Example — Control LED Boolean Pick List (p. 183)

Figure 43. Custom Menu Example — Home Screen

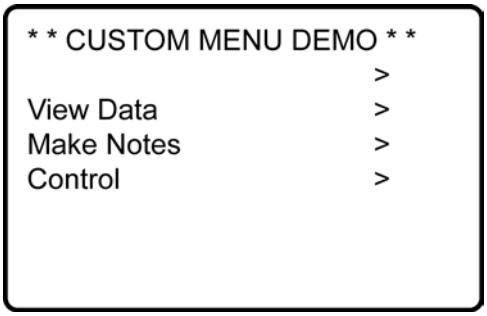

Figure 44. Custom Menu Example — View Data Window

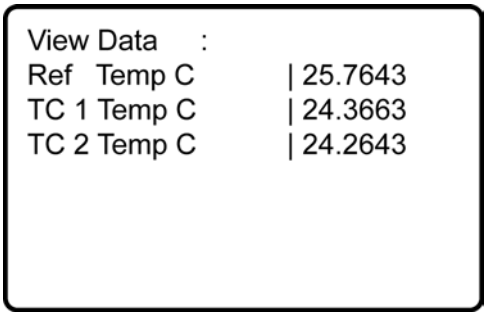

Figure 45. Custom Menu Example — Make Notes Sub Menu

```
Make Notes  :
Predefined     |  _______
Free Entry     |
Accept/Clear   |  ??????
```

Figure 46. Custom Menu Example — Predefined Notes Pick List

```
Predefined
  Cal_Done
  Offset_Changed
```

Figure 47. Custom Menu Example — Free Entry Notes Window

```
Modify Value
  Free Entry

    Current Value:

    New Value:
```

Figure 48. Custom Menu Example — Accept / Clear Notes Window

```
Accept / Clear
  Accept
  Clear
```

Figure 49. Custom Menu Example — Control Sub Menu

```
Control  :
Count to LED |      0
Manual LED   |    Off
```

Figure 50. Custom Menu Example — Control LED Pick List

```
Count to LED
  15
  30
  45
  60
```

Figure 51. Custom Menu Example — Control LED Boolean Pick List

```
Manual LED
  On
  Off
```

Note See figures *Custom Menu Example — Home Screen* (p. 181) through *Custom Menu Example — Control LED Boolean Pick List* (p. 183) in reference to the following CRBasic example *Custom Menus* (p. 83, p. 555).

CRBasic Example 30. Custom Menus

```
'This program example demonstrates the building of a custom CR1000KD Keyboard Display menu.

'Declarations supporting View Data menu item
Public RefTemp                                  'Reference Temp Variable
Public TCTemp(2)                                'Thermocouple Temp Array

'Delarations supporting blank line menu item
Const Escape = "Hit Esc"                        'Word indicates action to exit dead end
```

```
'Declarations supporting Enter Notes menu item
Public SelectNote As String * 20              'Hold predefined pick list note
Const Cal_Done = "Cal Done"                   'Word stored when Cal_Don selected
Const Offst_Chgd = "Offset Changed"           'Word stored when Offst_Chgd selected
Const Blank = ""                              'Word stored when blank selected
Public EnterNote As String * 30               'Variable to hold free entry note
Public CycleNotes As String * 20              'Variable to hold notes control word
Const Accept = "Accept"                       'Notes control word
Const Clear = "Clear"                         'Notes control word

'Declarations supporting Control menu item
Const On = true                               'Assign "On" as Boolean True
Const Off = false                             'Assign "Off" as Boolean False
Public StartFlag As Boolean                   'LED Control Process Variable
Public CountDown As Long                      'LED Count Down Variable
Public ToggleLED As Boolean                   'LED Control Variable

'Define Note DataTable                        'Set up Notes data table, written
DataTable(Notes,1,-1)                         'to when a note is accepted
  Sample(1,SelectNote,String)                 'Sample Pick List Note
  Sample(1,EnterNote,String)                  'Sample Free Entry Note
EndTable

'Define temperature DataTable                 'Set up temperature data table.
DataTable(TempC,1,-1)                         'Written to every 60 seconds with:
  DataInterval(0,60,Sec,10)
  Sample(1,RefTemp,FP2)                       'Sample of reference temperature
  Sample(1,TCTemp(1),FP2)                     'Sample of thermocouple 1
  Sample(1,TCTemp(2),FP2)                     'Sample of thermocouple 2
EndTable

'Custom Menu Declarations
DisplayMenu("**CUSTOM MENU DEMO**",-3)        'Create Menu; Upon power up, the custom menu
                                              'is displayed. The system menu is hidden
                                              'from the user.

  SubMenu("")                                 'Dummy Sub menu to write a blank line
    DisplayValue("",Escape)                   'a blank line
  EndSubMenu                                  'End of dummy submenu

  SubMenu("View Data ")                       'Create Submenu named PanelTemps
    DisplayValue("Ref  Temp C",RefTemp)       'Item for Submenu from Public
    DisplayValue("TC 1 Temp C",TCTemp(1))     'Item for Submenu - TCTemps(1)
    DisplayValue("TC 2 Temp C",TCTemp(2))     'Item for Submenu - TCTemps(2)
  EndSubMenu                                  'End of Submenu

  SubMenu("Make Notes ")                      'Create Submenu named PanelTemps
    MenuItem("Predefined",SelectNote)         'Choose predefined notes Menu Item
    MenuPick(Cal_Done,Offset_Changed)         'Create pick list of predefined notes
    MenuItem("Free Entry",EnterNote)          'User entered notes Menu Item
    MenuItem("Accept/Clear",CycleNotes)
    MenuPick(Accept,Clear)
  EndSubMenu
```

```
  SubMenu("Control ")                          'Create Submenu named PanelTemps
    MenuItem("Count to LED",CountDown)         'Create menu item CountDown
    MenuPick(15,30,45,60)                      'Create a pick list for CountDown
    MenuItem("Manual LED",toggleLED)           'Manual LED control Menu Item
    MenuPick(On,Off)
    EndSubMenu
EndMenu                                        'End custom menu creation

'Main Program
BeginProg

  CycleNotes = "??????"                        'Initialize Notes Sub Menu,
                                               'write ????? as a null
  Scan(1,Sec,3,0)

    'Measurements
    PanelTemp(RefTemp,250)                     'Measure Reference Temperature
                                               'Measure Two Thermocouples
    TCDiff(TCTemp(),2,mV2_5C,1,TypeT,RefTemp,True,0,_60Hz,1.0,0)
    CallTable TempC                            'Call data table

    'Menu Item "Make Notes" Support Code
    If CycleNotes = "Accept" Then
      CallTable Notes                          'Write data to Notes data table
      CycleNotes = "Accepted"                  'Write "Accepted" after written
      Delay(1,500,mSec)                        'Pause so user can read "Accepted"
      SelectNote = ""                          'Clear pick list note
      EnterNote = ""                           'Clear free entry note
      CycleNotes = "??????"                    'Write ????? as a null prompt
    EndIf
    If CycleNotes = "Clear" Then               'Clear notes when requested
      SelectNote = ""                          'Clear pick list note
      EnterNote = ""                           'Clear free entry note
      CycleNotes = "??????"                    'Write ????? as a null prompt
    EndIf

    'Menu Item "Control" Menu Support Code
    CountDown = CountDown - 1                  'Count down by 1
    If CountDown <= 0                          'Stop count down from passing 0
      CountDown = 0
    EndIf
    If CountDown > 0 Then
      StartFlag = True                         'Indicate countdown started
    EndIf
    If StartFlag = True AND CountDown = 0 Then'Interprocess count down
                                               'and manual LED
      ToggleLED = True
      StartFlag = False
    EndIf
    If StartFlag = True AND CountDown <> 0 Then'Interprocess count down and manual LED
      ToggleLED = False
    EndIf
    PortSet(4,ToggleLED)                       'Set control port according
                                               'to result of processing
  NextScan
EndProg
```

7.9.4 Data Input: Loading Large Data Sets

Large data sets, such as look up tables or tag numbers, can be loaded in the CR800 for use by the CRBasic program. This is efficiently accomplished by using the **Data**, **DataLong**, and **Read** instructions, as demonstrated in CRBasic example *Loading Large Data Sets* *(p. 186).*

CRBasic Example 31. Loading Large Data Sets

```
'This program example demonstrates how to load a set of data into variables.  Twenty values
'are loaded into two arrays: one declared As Float, one declared As Long. Individual Data
'lines can be many more values long than shown (limited only by maximum statement length),
'and many more lines can be written.  Thousands of values can be loaded in this way.

'Declare Float and Long variables.  Can also be declared as Dim.
Public DataSetFloat(10) As Float
Public DataSetLong(10) As Long
Dim x

'Write data set to CR800 memory
Data 1.1,2.2,3.3,4.4,5.5
Data -1.1,-2.2,-3.3,-4.4,-5.5
DataLong 1,2,3,4,5
DataLong -1,-2,-3,-4,-5

'Declare data table
DataTable (DataSet_,True,-1)
  Sample (10,DataSetFloat(),Float)
  Sample (10,DataSetLong(),Long)
EndTable

BeginProg

  'Assign Float data to variable array declared As Float
  For x = 1 To 10
    Read DataSetFloat(x)
  Next x

  'Assign Long data to variable array declared As Long
  For x = 1 To 10
    Read DataSetLong(x)
  Next x

  Scan(1,sec,0,1)

    'Write all data to final-data memory
    CallTable DataSet_

  NextScan

EndProg
```

7.9.5 Data Input: Array-Assigned Expression

CRBasic provides for the following operations on one dimension of a multi-dimensional array:

- Initialize
- Transpose
- Copy
- Mathematical
- Logical

Examples include:

- Process a variable array without use of **For**/**Next**
- Create boolean arrays based on comparisons with another array or a scalar variable
- Copy a dimension to a new location
- Perform logical operations for each element in a dimension using scalar or similarly located elements in different arrays and dimensions

---

Note Array-assigned expression notation is an alternative to **For**/**Next** instructions, typically for use by more advanced programmers. It will probably not reduce processing time significantly over the use of **For**/**Next**. To reduce processing time, consider using the **Move()** instruction, which requires more intensive programming.

Syntax rules:

- Definitions:
  - Least-significant dimension — the last or right-most figure in an array index. For example, in the array ***array(a,b)***, ***b*** is the least-significant dimension index. In the array ***array(a,b,c)***, ***c*** is least significant.
  - Negate — place a negative or minus sign (-) before the array index. For example, when negating the least-significant dimension in ***array(a,b,c)***, the notion is ***array(a,b,-c)***
- An empty set of parentheses designates an array-assigned expression. For example, reference ***array()*** or ***array(a,b,c)()***.
- Only one dimension of the array is operated on at a time.
- To select the dimension to be operated on, negate the dimension of index of interest.
- Operations will not cross dimensions. An operation begins at the specified starting point and continues to one of the following:
  - End of the dimension
  - Where the dimension is specified by a negative
  - Where the dimension is the least significant (default)
- If indices are not specified, or none have been preceded with a minus sign, the least significant dimension of the array is assumed.
- The offset into the dimension being accessed is given by ***(a,b,c)***.
- If the array is referenced as ***array()***, the starting point is ***array(1,1,1)*** and the least significant dimension is accessed. For example, if the array is declared as ***test(a,b,c)***, and subsequently referenced as ***test()***, then the starting point is ***test(1,1,1)*** and dimension **c** is accessed.

Table 24. CRBasic Example. Array Assigned Expression: Sum Columns and Rows

```
'This example sums three rows and two columns of a 3x2 array.

'Source array image:
'1.23,2.34
'3.45,4.56
'5.67,6.78

Public Array(3,2) = {1.23,2.34,3.45,4.56,5.67,6.78}'load values into source array
Public RowSum(3)
Public ColumnSum(2)

BeginProg
  Scan(1,Sec,0,0)
    'For each row, add up the two columns
    RowSum() = Array(-1,1)() + Array(-1,2)()
    'For each column, add up the three rows
    ColumnSum() = Array(1,-1)() + Array(2,-1)() + Array(3,-1)()
  NextScan
EndProg
```

Table 25. CRBasic Example. Array Assigned Expression: Transpose an Array

```
'This example transposes a 3x2 array to a 2x3 array
'Source array image:
'1,2
'3,4
'5,6

'Destination array image (transpose of source):
'1,3,5
'2,4,6

'Dimension and initialize source array
Public A(3,2) = {1,2,3,4,5,6}

'Dimension destination array
Public At(2,3)

'Delcare For/Next counter
Dim i

BeginProg
  Scan (1,Sec,0,0)
    For i = 1 To 2
      'For each column of the source array A(), copy the column into a row of the
      'destination array At()
      At(i,-1)() = A(-1,i)()
    Next i
  NextScan
EndProg
```

Table 26. CRBasic Example. Array Assigned Expression: Comparison / Boolean Evaluation

```
'Example: Comparison / Boolean Evaluation

'Element-wise comparisons is performed through scalar expansion or by comparing each
'element in one array to a similarly located element in another array to generate a
'resultant boolean array to be used for decision making and control, such as
'an array input to a SDM-CD16AC.

Public TempC(3) = {15.1234,20.5678,25.9876}
Public TempC_Rounded(3)
Public TempDiff(3)
Public TempC_Alarm(3) As Boolean
Public TempF_Thresh(3) = {55,60,80}
Public TempF_Alarm(3) As Boolean

BeginProg
  Scan(1,Sec,0,0)

    'element-wise comparison of each temperature in the array to a scalar value
    'set corresponding alarm boolean value true if temperature exceeds 20 degC
    TempC_Alarm() = TempC() > 20

    'some, not all or most, instructions will accept this array notation to auto-index
    'through the array

    'round each temperature to the nearest tenth of a degree
    TempC_Rounded() = Round(TempC(),1)

    'element-wise subtraction
    'each element in TempC_Rounded is subtracted from the similarly located element inTempC
    'calculate the difference between each TempC value and the rounded counterpart
    TempDiff() = TempC() - TempC_Rounded()

    'element-wise operations can be mixed with scalar expansion operations
    'set corresponding alarm boolean value true if temperature, after being
    'converted to degF, exceeds it's corresponding alarm threshold value in degF
    TempF_Alarm() = (TempC() * 1.8 + 32) > TempF_Thresh()

  NextScan
EndProg
```

Table 27. CRBasic Example. Array Assigned Expression: Fill Array Dimension

```
'Example: Fill Array Dimension

Public A(3)
Public B(3,2)
Public C(4,3,2)
Public Da(3,2) = {1,1,1,1,1,1}
Public Db(3,2)
Public DMultiplier(3) = {10,100,1000}
Public DOffset(3) = {1,2,3}

BeginProg
  Scan(1,Sec,0,0)

    A() = 1 'set all elements of 1D array or first dimension to 1

    B(1,1)() = 100  'set B(1,1) and B(1,2) to 100
    B(-2,1)() = 200 'set B(2,1) and B(3,1) to 200
    B(-2,2)() = 300 'set B(2,2) and B(3,2) to 300

    C(1,-1,1)() = A() 'copy A(1), A(2), and A(3) into C(1,1,1), C(1,2,1), and C(1,3,1),
                      'respectively
    C(2,-1,1)() = A() * 1.8 + 32 'scale and then copy A(1), A(2), and A(3) into C(2,1,1),
                                 'C(2,2,1), and C(2,3,1), respectively

    'scale the first column of Da by corresponding multiplier and offset
    'copy the result into the first column of Db
    'then set second column of Db to NAN
    Db(-1,1)() = Da(-1,1)()  * DMultiplier() + DOffset()
    Db(-1,2)() = NAN

  NextScan
EndProg
```

7.9.6 Data Output: Calculating Running Average

The **AvgRun()** instruction calculates a running average of a measurement or calculated value. A running average (***Dest***) is the average of the last N values where N is the number of values, as expressed in the running-average equation:

$$\mathbf{Dest} = \frac{\sum_{i\text{-}1}^{i\text{-}N} X_i}{N}$$

where X_N is the most recent value of the source variable and X_{N-1} is the previous value (X_1 is the oldest value included in the average, i.e., N-1 values back from the most recent). NANs are ignored in the processing of **AvgRun()** unless all values in the population are NAN.

AvgRun() uses high-precision math, so a 32-bit extension of the mantissa is saved and used internally resulting in 56 bits of precision.

Note This instruction should not normally be inserted within a **For**/**Next** construct with the ***Source*** and ***Destination*** parameters indexed and ***Reps*** set to ***1***. Doing so will perform a single running average, using the values of the different

elements of the array, instead of performing an independent running average on each element of the array. The results will be a running average of a spatial average of the various source array elements.

A running average is a digital low-pass filter; its output is attenuated as a function of frequency, and its output is delayed in time. Degree of attenuation and phase shift (time delay) depend on the frequency of the input signal and the time length (which is related to the number of points) of the running average.

The figure *Running-Average Frequency Response* (p. 192) is a graph of signal attenuation plotted against signal frequency normalized to 1/(running average duration). The signal is attenuated by a synchronizing filter with an order of 1 (simple averaging): Sin(πX) / (πX), where X is the ratio of the input signal frequency to the running-average frequency (running-average frequency = 1 / time length of the running average).

Example:

Scan period = 1 ms,

N value = 4 (number of points to average),

Running-average duration = 4 ms

Running-average frequency = 1 / (running-average duration = 250 Hz)

Input-signal frequency = 100 Hz

Input frequency to running average (normalized frequency) = 100 / 250 = 0.4

Sin(0.4π) / (0.4π) = 0.757 (or read from figure *Running-Average Frequency Response* (p. 192), where the X axis is 0.4)

For a 100 Hz input signal with an amplitude of 10 V peak-to-peak, a running average outputs a 100 Hz signal with an amplitude of 7.57 V peak-to-peak.

There is also a phase shift, or delay, in the **AvgRun()** output. The formula for calculating the delay, in number of samples, is:

Delay in samples = (N–1) / 2

Note N = number of points in running average

To calculate the delay in time, multiply the result from the above equation by the period at which the running average is executed (usually the scan period):

Delay in time = (scan period) • (N–1) / 2

For the example above, the delay is:

Delay in time = (1 ms) • (4 – 1) / 2 = 1.5 ms

Example:

An accelerometer was tested while mounted on a beam. The test had the following characteristics:

- Accelerometer resonant frequency ≈ 36 Hz
- Measurement period = 2 ms
- Running average duration = 20 ms (frequency of 50 Hz)

Normalized resonant frequency was calculated as follows:

```
36 Hz / 50 Hz = 0.72
SIN(0.72π) / (0.72π) = 0.34.
```

So, the recorded amplitude was about 1/3 of the input-signal amplitude. A CRBasic program was written with variables **Accel2** and **Accel2RA**. The raw measurement was stored in **Accel2**. **Accel2RA** held the result of performing a running average on the **Accel2**. Both values were stored at a rate of 500 Hz. Figure *Running-Average Signal Attenuation* *(p. 193)* shows the two variables plotted to illustrate the attenuation. The running-average value has the lower amplitude.

The resultant delay, D_r, is calculated as follows:

$$D_r = (\text{scan rate}) \cdot (N-1)/2 = 2\text{ ms } (10-1)/2 = 9\text{ ms}$$

D_r is about 1/3 of the input-signal period.

Figure 52. Running-Average Frequency Response

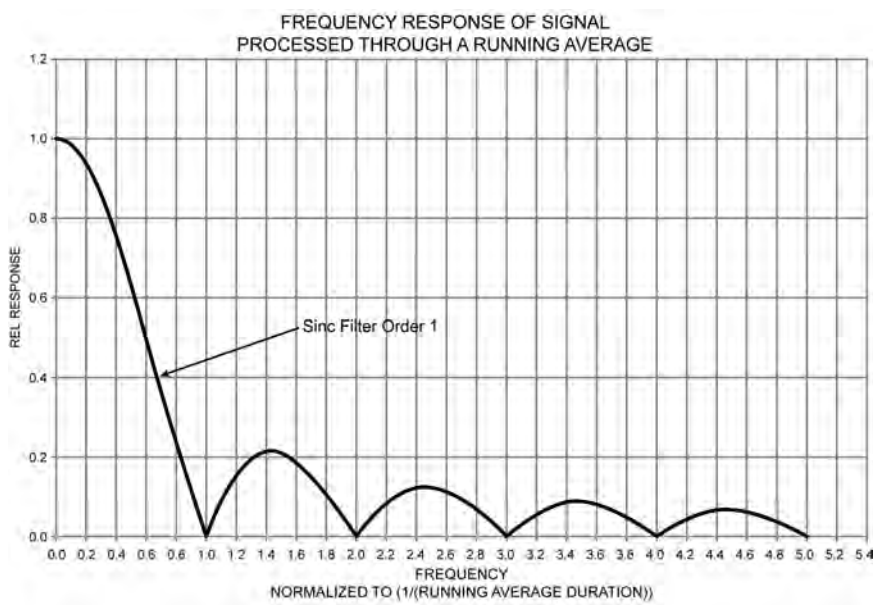

Figure 53. Running-Average Signal Attenuation

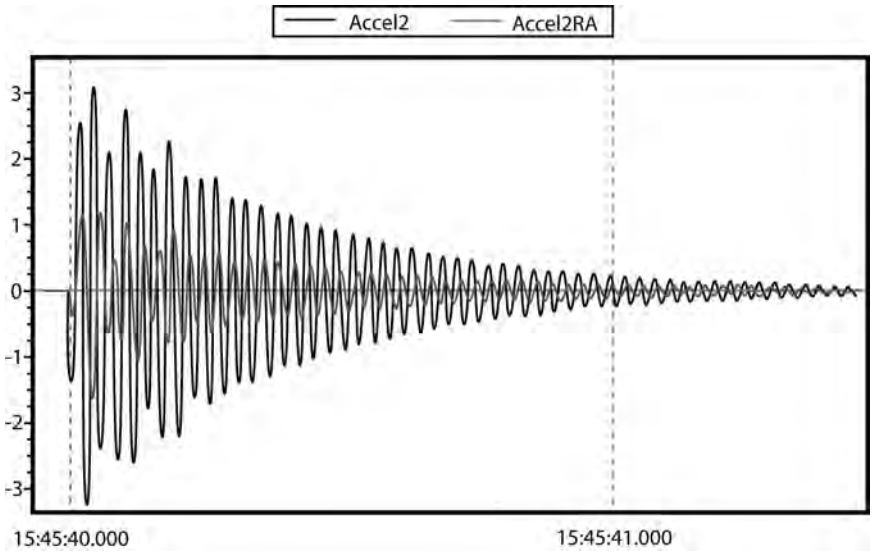

7.9.7 Data Output: Triggers and Omitting Samples

TrigVar is the third parameter in the **DataTable()** instruction. It controls whether or not a data record is written to final memory. ***TrigVar*** control is subject to other conditional instructions such as the **DataInterval()** and **DataEvent()** instructions.

DisableVar is the last parameter in most output processing instructions, such as **Average()**, **Maximum()**, **Minimum()**, etc. It controls whether or not a particular measurement or value is included in the affected output-processing function.

For individual measurements to affect summary data, output processing instructions such as **Average()** must be executed whenever the data table is called from the program — normally once each scan. For example, for an average to be calculated for the hour, each measurement must be added to a total over the hour. This accumulation of data is not affected by ***TrigVar***. ***TrigVar*** controls only the moment when the final calculation is performed and the processed data (the average) are written to the data table. For this summary moment to occur, ***TrigVar*** and all other conditions (such as **DataInterval()** and **DataEvent()**) must be true. Expressed another way, when ***TrigVar*** is false, output processing instructions (for example, **Average()**) perform intermediate processing but not the final process, and a new record will not be created.

Note In many applications, output records are solely interval based and ***TrigVar*** is always set to **TRUE** (**-1**). In such applications, **DataInterval()** is the sole specifier of the output trigger condition.

Figure *Data from TrigVar Program* *(p. 194)* shows data produced by CRBasic example *Using TrigVar to Trigger Data Storage* *(p. 194),* which uses ***TrigVar*** rather than **DataInterval()** to trigger data storage.

Figure 54. Data from TrigVar Program

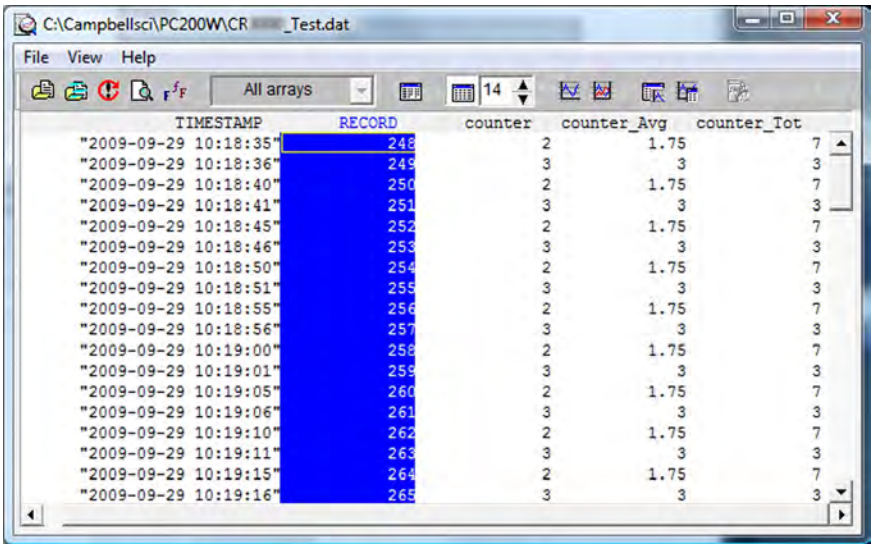

TIMESTAMP	RECORD	counter	counter_Avg	counter_Tot
"2009-09-29 10:18:35"	248	2	1.75	7
"2009-09-29 10:18:36"	249	3	3	3
"2009-09-29 10:18:40"	250	2	1.75	7
"2009-09-29 10:18:41"	251	3	3	3
"2009-09-29 10:18:45"	252	2	1.75	7
"2009-09-29 10:18:46"	253	3	3	3
"2009-09-29 10:18:50"	254	2	1.75	7
"2009-09-29 10:18:51"	255	3	3	3
"2009-09-29 10:18:55"	256	2	1.75	7
"2009-09-29 10:18:56"	257	3	3	3
"2009-09-29 10:19:00"	258	2	1.75	7
"2009-09-29 10:19:01"	259	3	3	3
"2009-09-29 10:19:05"	260	2	1.75	7
"2009-09-29 10:19:06"	261	3	3	3
"2009-09-29 10:19:10"	262	2	1.75	7
"2009-09-29 10:19:11"	263	3	3	3
"2009-09-29 10:19:15"	264	2	1.75	7
"2009-09-29 10:19:16"	265	3	3	3

CRBasic Example 32. Using TrigVar to Trigger Data Storage

```
'This program example demonstrates the use of the TrigVar parameter in the DataTable()
'instruction to trigger data storage.  In this example, the variable Counter is
'incremented by 1 at each scan. The data table, which includes the Sample(), Average(), and
'Totalize() instructions, is called every scan.  Data are stored when TrigVar is true, and
'TrigVar is True when Counter = 2 or Counter = 3.  Data stored are the sample, average,
'and total of the variable Counter, which is equal to 0, 1, 2, 3, or 4 when the data table
'is called.

Public Counter

DataTable(Test,Counter=2 or Counter=3,100)
  Sample(1,Counter,FP2)
  Average(1,Counter,FP2,False)
  Totalize(1,Counter,FP2,False)
EndTable

BeginProg
  Scan(1,Sec,0,0)
    Counter = Counter + 1
    If Counter = 5 Then
      Counter = 0
    EndIf
    CallTable Test
  NextScan
EndProg
```

7.9.8 Data Output: Two Intervals in One Data Table

CRBasic Example 33. Two Data-Output Intervals in One Data Table

```
'This program example demonstrates the use of two time intervals in a data table. One time
'interval in a data table is the norm, but some applications require two.
'
'A table with two time intervals should be allocated memory as is done with a conditional table:
'rather than auto-allocate, set a fixed number of records.

'Declare Public Variables
Public PTemp, batt_volt, airtempC, deltaT
Public int_fast As Boolean
Public int_slow As Boolean
Public counter(4) As Long

'Declare Data Table
'
'Table is output on one of two intervals, depending on condition.
'Note the parenthesis around the TriggerVariable AND statements.

DataTable(TwoInt,(int_fast AND TimeIntoInterval(0,5,Sec)) OR (int_slow AND _
          TimeIntoInterval(0,15,sec)),-1)
  Minimum(1,batt_volt,FP2,0,False)
  Sample(1,PTemp,FP2)
  Maximum(1,counter(1),Long,False,False)
  Minimum(1,counter(1),Long,False,False)
  Maximum(1,deltaT,FP2,False,False)
  Minimum(1,deltaT,FP2,False,False)
  Average(1,deltaT,IEEE4,false)
EndTable

'Main Program
BeginProg
  Scan(1,Sec,0,0)

    PanelTemp(PTemp,250)
    Battery(Batt_volt)
    counter(1) = counter(1) + 1

    'Measure thermocouple
    TCDiff(AirTempC,1,mV2_5C,1,TypeT,PTemp,True,0,250,1.0,0)
    'calculate the difference in air temperature and panel temperature
    deltaT = airtempC - PTemp

    'When the difference in air temperatures is >=3 turn LED on and trigger the faster of
    'the two data-table intervals.
    If deltaT >= 3 Then
      PortSet(4,true)
      int_fast = true
      int_slow = false
    Else
      PortSet(4,false)
      int_fast = false
      int_slow = true
    EndIf
```

```
    'Call output tables
    CallTable TwoInt

  NextScan
EndProg
```

7.9.9 Data Output: Using Data Type Bool8

Variables used exclusively to store either **True** or **False** are usually declared **As BOOLEAN**. When recorded in final-data memory, the state of Boolean variables is typically stored in ***BOOLEAN*** data type. ***BOOLEAN*** data type uses a four-byte integer format. To conserve final-data memory or telecommunication band, you can use the ***BOOL8*** data type. A BOOL8 is a one-byte value that holds eight bits of information (eight states with one bit per state). To store the same information using a 32 bit ***BOOLEAN*** data type, 256 bits are required (8 states * 32 bits per state).

When programming with BOOL8 data type, repetitions in the output processing **DataTable()** instruction must be divisible by two, since an odd number of bytes cannot be stored. Also note that when the CR800 converts a LONG or FLOAT data type to BOOL8, only the least significant eight bits of the binary equivalent are used, i.e., only the binary representation of the decimal integer *modulo divide* (p. 494) 256 is used.

Example:

```
Given: LONG integer 5435
Find: BOOL8 representation of 5435
Solution:
    5435 / 256 = 21.2304687
    0.2304687 * 256 = 59
    Binary representation of 59 = 00111011 (CR800 stores
    these bits in reverse order)
```

When *datalogger support software* (p. 93) retrieves the BOOL8 value, it splits it apart into eight fields of **-1** or **0** when storing to an ASCII file. Consequently, more memory is required for the ASCII file, but CR800 memory is conserved. The compact ***BOOL8*** data type also uses less telecommunication band width when transmitted.

CRBasic example *Programming with Bool8 and Bit-Shift Operators* (p. 198) programs the CR800 to monitor the state of 32 "alarms" as a tutorial exercise. The alarms are toggled by manually entering zero or non-zero (e.g., 0 or 1) in each public variable representing an alarm as shown in figure *Alarms Toggled in Bit-Shift Example* (p. 197). Samples of the four public variables ***FlagsBool8(1)***, ***FlagsBool8(2)***, ***FlagsBool8(3)***, and ***FlagsBool8(4)*** are stored in data table **Bool8Data** as four one-byte values. However, as shown in figure *Bool8 Data from Bit-Shift Example (Numeric Monitor)* (p. 197), when viewing the data table in a *numeric monitor* (p. 495), data are conveniently translated into 32 values of **True** or **False**. In addition, as shown in figure *Bool8 Data from Bit-Shift Example (PC Data File)* (p. 198), when *datalogger support software* (p. 93) stores the data in an ASCII file, it is stored as 32 columns of either **-1** or **0**, each column representing the state of an alarm. You can use variable *aliasing* (p. 136) in the CRBasic program to make the data more understandable.

Figure 55. Alarms Toggled in Bit-Shift Example

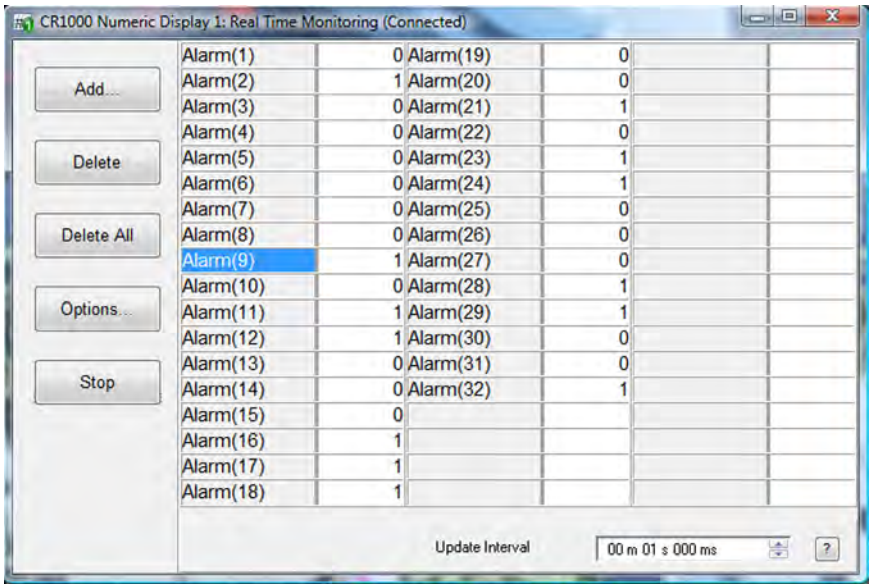

Figure 56. Bool8 Data from Bit-Shift Example (Numeric Monitor)

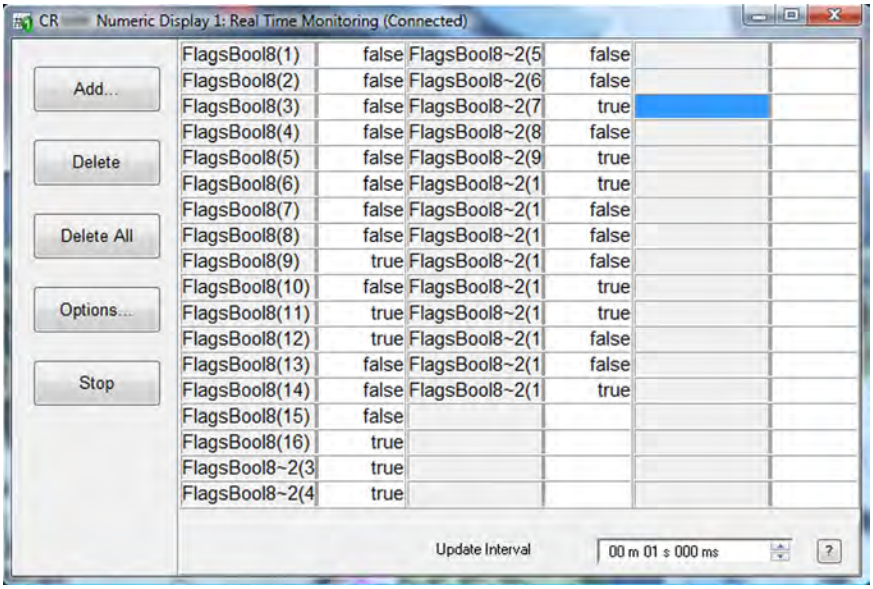

Figure 57. Bool8 Data from Bit-Shift Example (PC Data File)

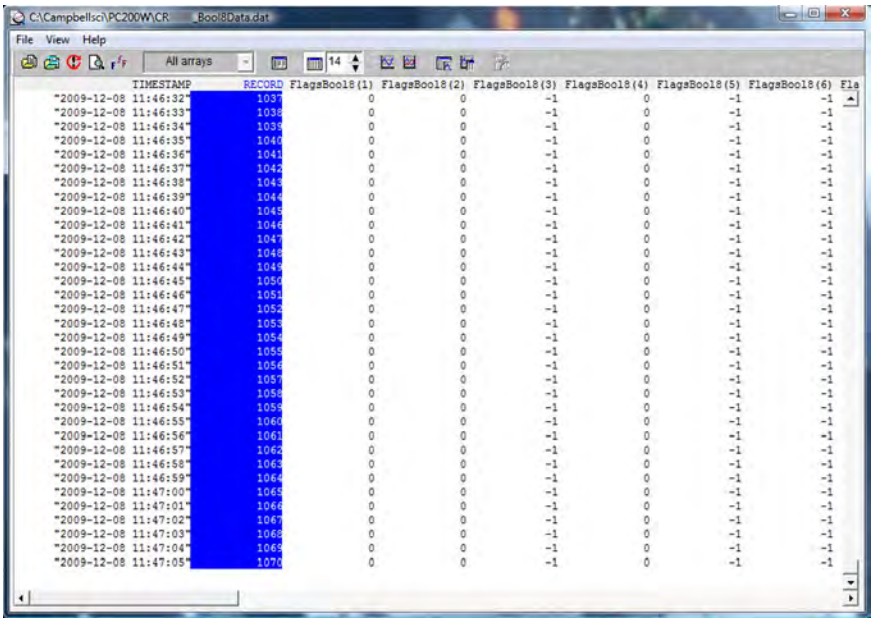

TIMESTAMP	RECORD	FlagsBool8(1)	FlagsBool8(2)	FlagsBool8(3)	FlagsBool8(4)	FlagsBool8(5)	FlagsBool8(6)	Fla
"2009-12-08 11:46:32"	1037	0	0	-1	0	-1	-1	
"2009-12-08 11:46:33"	1038	0	0	-1	0	-1	-1	
"2009-12-08 11:46:34"	1039	0	0	-1	0	-1	-1	
"2009-12-08 11:46:35"	1040	0	0	-1	0	-1	-1	
"2009-12-08 11:46:36"	1041	0	0	-1	0	-1	-1	
"2009-12-08 11:46:37"	1042	0	0	-1	0	-1	-1	
"2009-12-08 11:46:38"	1043	0	0	-1	0	-1	-1	
"2009-12-08 11:46:39"	1044	0	0	-1	0	-1	-1	
"2009-12-08 11:46:40"	1045	0	0	-1	0	-1	-1	
"2009-12-08 11:46:41"	1046	0	0	-1	0	-1	-1	
"2009-12-08 11:46:42"	1047	0	0	-1	0	-1	-1	
"2009-12-08 11:46:43"	1048	0	0	-1	0	-1	-1	
"2009-12-08 11:46:44"	1049	0	0	-1	0	-1	-1	
"2009-12-08 11:46:45"	1050	0	0	-1	0	-1	-1	
"2009-12-08 11:46:46"	1051	0	0	-1	0	-1	-1	
"2009-12-08 11:46:47"	1052	0	0	-1	0	-1	-1	
"2009-12-08 11:46:48"	1053	0	0	-1	0	-1	-1	
"2009-12-08 11:46:49"	1054	0	0	-1	0	-1	-1	
"2009-12-08 11:46:50"	1055	0	0	-1	0	-1	-1	
"2009-12-08 11:46:51"	1056	0	0	-1	0	-1	-1	
"2009-12-08 11:46:52"	1057	0	0	-1	0	-1	-1	
"2009-12-08 11:46:53"	1058	0	0	-1	0	-1	-1	
"2009-12-08 11:46:54"	1059	0	0	-1	0	-1	-1	
"2009-12-08 11:46:55"	1060	0	0	-1	0	-1	-1	
"2009-12-08 11:46:56"	1061	0	0	-1	0	-1	-1	
"2009-12-08 11:46:57"	1062	0	0	-1	0	-1	-1	
"2009-12-08 11:46:58"	1063	0	0	-1	0	-1	-1	
"2009-12-08 11:46:59"	1064	0	0	-1	0	-1	-1	
"2009-12-08 11:47:00"	1065	0	0	-1	0	-1	-1	
"2009-12-08 11:47:01"	1066	0	0	-1	0	-1	-1	
"2009-12-08 11:47:02"	1067	0	0	-1	0	-1	-1	
"2009-12-08 11:47:03"	1068	0	0	-1	0	-1	-1	
"2009-12-08 11:47:04"	1069	0	0	-1	0	-1	-1	
"2009-12-08 11:47:05"	1070	0	0	-1	0	-1	-1	

CRBasic Example 34. Programming with Bool8 and a Bit-Shift Operator

```
'This program example demonstrates the use of the Bool8 data type and the ">>" bit-shift
'operator.

Public Alarm(32)
Public Flags As Long
Public FlagsBool8(4) As Long

DataTable(Bool8Data,True,-1)
  DataInterval(0,1,Sec,10)
  'store bits 1 through 16 in columns 1 through 16 of data file
  Sample(2,FlagsBool8(1),Bool8)
  'store bits 17 through 32 in columns 17 through 32 of data file
  Sample(2,FlagsBool8(3),Bool8)
EndTable

BeginProg
  Scan(1,Sec,3,0)

    'Reset all bits each pass before setting bits selectively
    Flags = &h0

    'Set bits selectively. Hex is used to save space.

    'Logical OR bitwise comparison
```

```
'If bit in    OR bit in     The result
'Flags Is     Bin/Hex Is    Is
'----------   ----------    ----------
'     0            0             0
'     0            1             1
'     1            0             1
'     1            1             1

'Binary equivalent of Hex:
If Alarm(1) Then Flags = Flags OR &h1          '                              &b1
If Alarm(2) Then Flags = Flags OR &h2          '                             &b10
If Alarm(3) Then Flags = Flags OR &h4          '                            &b100
If Alarm(4) Then Flags = Flags OR &h8          '                           &b1000
If Alarm(5) Then Flags = Flags OR &h10         '                          &b10000
If Alarm(6) Then Flags = Flags OR &h20         '                         &b100000
If Alarm(7) Then Flags = Flags OR &h40         '                        &b1000000
If Alarm(8) Then Flags = Flags OR &h80         '                       &b10000000
If Alarm(9) Then Flags = Flags OR &h100        '                      &b100000000
If Alarm(10) Then Flags = Flags OR &h200       '                     &b1000000000
If Alarm(11) Then Flags = Flags OR &h400       '                    &b10000000000
If Alarm(12) Then Flags = Flags OR &h800       '                   &b100000000000
If Alarm(13) Then Flags = Flags OR &h1000      '                  &b1000000000000
If Alarm(14) Then Flags = Flags OR &h2000      '                 &b10000000000000
If Alarm(15) Then Flags = Flags OR &h4000      '                &b100000000000000
If Alarm(16) Then Flags = Flags OR &h8000      '               &b1000000000000000
If Alarm(17) Then Flags = Flags OR &h10000     '              &b10000000000000000
If Alarm(18) Then Flags = Flags OR &h20000     '             &b100000000000000000
If Alarm(19) Then Flags = Flags OR &h40000     '            &b1000000000000000000
If Alarm(20) Then Flags = Flags OR &h80000     '           &b10000000000000000000
If Alarm(21) Then Flags = Flags OR &h100000    '          &b100000000000000000000
If Alarm(22) Then Flags = Flags OR &h200000    '         &b1000000000000000000000
If Alarm(23) Then Flags = Flags OR &h400000    '        &b10000000000000000000000
If Alarm(24) Then Flags = Flags OR &h800000    '       &b100000000000000000000000
If Alarm(25) Then Flags = Flags OR &h1000000   '      &b1000000000000000000000000
If Alarm(26) Then Flags = Flags OR &h2000000   '     &b10000000000000000000000000
If Alarm(27) Then Flags = Flags OR &h4000000   '    &b100000000000000000000000000
If Alarm(28) Then Flags = Flags OR &h8000000   '   &b1000000000000000000000000000
If Alarm(29) Then Flags = Flags OR &h10000000  '  &b10000000000000000000000000000
If Alarm(30) Then Flags = Flags OR &h20000000  ' &b100000000000000000000000000000
If Alarm(31) Then Flags = Flags OR &h40000000  '&b1000000000000000000000000000000
If Alarm(32) Then Flags = Flags OR &h80000000  '&b10000000000000000000000000000000

'Note &HFF = &B11111111. By shifting at 8 bit increments along 32-bit 'Flags' (Long
'data type), the first 8 bits in the four Longs FlagsBool8(4) are loaded with alarm
'states. Only the first 8 bits of each Long 'FlagsBool8' are stored when converted
'to Bool8.

'Logical AND bitwise comparison

'If bit in    OR bit in    The result
'Flags Is     Bin/Hex Is   Is
'----------   ----------   ----------
'    0            0            0
'    0            1            0
'    1            0            0
'    1            1            1
```

```
    FlagsBool8(1) = Flags AND &HFF            'AND 1st 8 bits of "Flags" & 11111111
    FlagsBool8(2) = (Flags >> 8) AND &HFF     'AND 2nd 8 bits of "Flags" & 11111111
    FlagsBool8(3) = (Flags >> 16) AND &HFF    'AND 3rd 8 bits of "Flags" & 11111111
    FlagsBool8(4) = (Flags >> 24) AND &HFF    'AND 4th 8 bits of "Flags" & 11111111

    CallTable(Bool8Data)
  NextScan
EndProg
```

7.9.10 Data Output: Using Data Type NSEC

Data of NSEC type reside only in final-data memory. A datum of NSEC consists of eight bytes — four bytes of seconds since 1990 and four bytes of nanoseconds into the second. ***Nsec*** is declared in the ***Data Type*** parameter in *final-data memory output-processing instructions* (p. 516). It is used in the following applications:

- Placing a time stamp in a second position in a record.
- Accessing a time stamp from a data table and subsequently storing it as part of a larger data table. **Maximum()**, **Minimum()**, and **FileTime()** instructions produce a time stamp that may be accessed from the program after being written to a data table. The time of other events, such as alarms, can be stored using the **RealTime()** instruction.
- Accessing and storing a time stamp from another datalogger in a PakBus network.

7.9.10.1 NSEC Options

NSEC is used in a CRBasic program one of the following ways. In all cases, the time variable is only sampled with a **Sample()** instruction, ***Reps* = *1***.

1. Time variable is declared **As Long. Sample()** instruction assumes the time variable holds seconds since 1990 and microseconds into the second is 0. The value stored in final-data memory is a standard time stamp. See CRBasic example *NSEC — One Element Time Array* (p. 200).

2. Time-variable array dimensioned to (2) and **As Long** — **Sample()** instruction assumes the first time variable array element holds seconds since 1990 and the second element holds microseconds into the second. See CRBasic example *NSEC — Two Element Time Array* (p. 201).

3. Time-variable array dimensioned to (7) or (9) and **As Long** or **As Float** — **Sample()** instruction assumes data are stored in the variable array in the sequence year, month, day of year, hour, minutes, seconds, and milliseconds. See CRBasic example *NSEC — Seven and Nine Element Time Arrays* (p. 202).

CRBasic example *NSEC — Convert Time Stamp to Universal Time* (p. 200) shows one of several practical uses of the NSEC data type.

CRBasic Example 35. NSEC — One Element Time Array

```
'This program example demonstrates the use of NSEC data type to determine seconds since
'00:00:00 1 January 1990.  A time stamp is retrieved into variable TimeVar(1) as seconds
'since 00:00:00 1 January 1990. Because the variable is dimensioned to 1, NSEC assumes
'the value = seconds since 00:00:00 1 January 1990.

'Declarations
Public PTemp
Public TimeVar(1) As Long

DataTable(FirstTable,True,-1)
  DataInterval(0,1,Sec,10)
  Sample(1,PTemp,FP2)
EndTable

DataTable(SecondTable,True,-1)
  DataInterval(0,5,Sec,10)
  Sample(1,TimeVar,Nsec)
EndTable

'Program
BeginProg
  Scan(1,Sec,0,0)
    TimeVar = FirstTable.TimeStamp
    CallTable FirstTable
    CallTable SecondTable
  NextScan
EndProg
```

CRBasic Example 36. NSEC — Two Element Time Array

```
'This program example demonstrates how to determine seconds since 00:00:00 1 January 1990,
'and microseconds into the last second.  This is done by retrieving variable TimeStamp into
'variables TimeOfMaxVar(1) and TimeOfMaxVar(2). Because the variable TimeOfMaxVar() is
'dimensioned to 2, NSEC assumes the following:
'  1) TimeOfMaxVar(1) = seconds since 00:00:00 1 January 1990, and
'  2) TimeOfMaxVar(2) = microseconds into a second.

'Declarations
Public PTempC
Public MaxVar
Public TimeOfMaxVar(2) As Long

DataTable(FirstTable,True,-1)
  DataInterval(0,1,Min,10)
  Maximum(1,PTempC,FP2,False,True)
EndTable

DataTable(SecondTable,True,-1)
  DataInterval(0,5,Min,10)
  Sample(1,MaxVar,FP2)
  Sample(1,TimeOfMaxVar,Nsec)
EndTable
```

```
'Program
BeginProg
  Scan(1,Sec,0,0)

    PanelTemp(PTempC,250)
    MaxVar = FirstTable.PTempC_Max
    TimeOfMaxVar = FirstTable.PTempC_TMx
    CallTable FirstTable
    CallTable SecondTable

  NextScan
EndProg
```

CRBasic Example 37. NSEC — Seven and Nine Element Time Arrays

```
'This program example demonstrates the use of NSEC data type to sample a time stamp into
'final-data memory using an array dimensioned to 7 or 9.

'A time stamp is retrieved into variable rTime(1) through rTime(9) as year, month, day,
'hour, minutes, seconds, and microseconds using the RealTime() instruction. The first
'seven time values are copied to variable rTime2(1) through rTime2(7).  Because the
'variables are dimensioned to 7 or greater, NSEC assumes the first seven time factors
'in the arrays are year, month, day, hour, minutes, seconds, and microseconds.

'Declarations
Public rTime(9) As Long                        '(or Float)
Public rTime2(7) As Long                       '(or Float)
Dim x

DataTable(SecondTable,True,-1)
  DataInterval(0,5,Sec,10)
  Sample(1,rTime,NSEC)
  Sample(1,rTime2,NSEC)
EndTable

'Program
BeginProg
  Scan(1,Sec,0,0)

    RealTime(rTime)
    For x = 1 To 7
      rTime2(x) = rTime(x)
    Next

    CallTable SecondTable

  NextScan
EndProg
```

CRBasic Example 38. NSEC —Convert Timestamp to Universal Time

```
'This program example demonstrates the use of NSEC data type to convert a data time stamp
'to universal time.
'
'Application: the CR800 needs to display Universal Time (UT) in human readable
'string forms.  The CR800 can calculate UT by adding the appropriate offset to a
'standard time stamp.  Adding offsets requires the time stamp be converted to numeric
'form, the offset applied, then the new time be converted back to string forms.

'These are accomplished by:
'  1) reading Public.TimeStamp into a LONG numeric variable.
'  2) store it into a type NSEC datum in final-data memory.
'  3) sample it back into string form using the TableName.FieldName notation.

'Declarations
Public UTTime(3) As String * 30
Dim TimeLong As Long
Const UTC_Offset = -7 * 3600                    '-7 hours offset (as seconds)

DataTable(TimeTable,true,1)
  Sample(1,TimeLong,Nsec)
EndTable

'Program
BeginProg
  Scan(1,Sec,0,0)

    '1) Read Public.TimeStamp into a LONG numeric variable. Note that TimeStamp is a
    '   system variable, so it is not declared.
    TimeLong = Public.TimeStamp(1,1) + UTC_Offset

    '2) Store it into a type NSEC datum in final-data memory.
    CallTable(TimeTable)

    '3) sample time to three string forms using the TableName.FieldName notation.
    'Form 1: "mm/dd/yyyy hr:mm:ss
    UTTime(1) = TimeTable.TimeLong(1,1)
    'Form 2: "dd/mm/yyyy hr:mm:ss
    UTTime(2) = TimeTable.TimeLong(3,1)
    'Form 3: "ccyy-mm-dd hr:mm:ss (ISO 8601 Int'l Date)
    UTTime(3) = TimeTable.TimeLong(4,1)

  NextScan
EndProg
```

7.9.11 Field Calibration — Details

Related Topics:
- *Field Calibration — Overview* (p. 73)
- *Field Calibration — Details* (p. 203)

Calibration increases accuracy of a sensor by adjusting or correcting its output to match independently verified quantities. Adjusting a sensor output signal is preferred, but not always possible or practical. By using the **FieldCal()** or **FieldCalStrain()** instruction, a linear sensor output can be corrected in the CR800 after the measurement by adjusting the multiplier and offset.

When included in the CRBasic program, **FieldCal()** and **FieldCalStrain()** can be used through a datalogger support software *calibration wizard* (p. 483). Help for using the wizard is available in the software.

A more arcane procedure that does not require a PC can be executed though the CR1000KD Keyboard / Displayor. If you do not have a keyboard, the same procedure can be done in a *numeric monitor* (p. 495). Numeric monitor screen captures are used in the following procedures. Running through these procedures will give you a foundation for how field calibration works, but use of the calibration wizard for routine work is recommended.

Syntax of **FieldCal()** and **FieldCalStrain()** is summarized in the section *Calibration Functions* (p. 572). More detail is available in *CRBasic Editor Help*.

7.9.11.1 Field Calibration CAL Files

Calibration data are stored automatically, usually on the CR800 CPU: drive, in CAL (.cal) files. These data become the source for calibration factors when requested by the **LoadFieldCal()** instruction. A file is created automatically on the same CR800 memory drive and given the same name as the program that creates and uses it. For example, the CRBasic program file CPU:MyProg.cr8 generates the CAL file CPU:MyProg.cal.

CAL files are created if a program using **FieldCal()** or **FieldCalStrain()** does not find an existing, compatible CAL file. Files are updated with each successful calibration with new calibration factors factors. A calibration history is recorded only if the CRBasic program creates a *data table* (p. 485) with the **SampleFieldCal()** instruction.

Note CAL files created by **FieldCal()** and **FieldCalStrain()** differ from files created by the **CalFile()** instruction (*File Management* (p. 361)).

7.9.11.2 Field Calibration Programming

Field-calibration functionality is included in a CRBasic program through either of the following instructions:

- **FieldCal()** — the principal instruction used for non-strain gage type sensors. For introductory purposes, use one **FieldCal()** instruction and a unique set of **FieldCal()** variables for each sensor. For more advanced applications, use variable arrays.
- **FieldCalStrain()** — the principal instruction used for strain gages measuring microstrain. Use one **FieldCalStrain()** instruction and a unique set of **FieldCalStrain()** variables for each sensor. For more advanced applications, use variable arrays.

FieldCal() and **FieldCalStrain()** use the following instructions:

- **LoadFieldCal()** — an optional instruction that evaluates the validity of, and loads values from a CAL file.
- **SampleFieldCal** — an optional data-storage output instruction that writes the latest calibration values to a data table (not to the CAL file).

FieldCal() and **FieldCalStrain()** use the following reserved Boolean variable:

- **NewFieldCal** — a reserved Boolean variable under CR800 control used to

optionally trigger a data storage output table one time after a calibration has succeeded.

See *CRBasic Editor Help* for operational details on CRBasic instructions.

7.9.11.3 Field Calibration Wizard Overview

The *LoggerNet* and *RTDAQ* field calibration wizards step you through the procedure by performing the mode-variable changes and measurements automatically. You set the sensor to known values and input those values into the wizard.

When a program with **FieldCal()** or **FieldCalStrain()** is running, select *LoggerNet* or *RTDAQ* | **Datalogger** | **Calibration Wizard** to start the wizard. A list of measurements used is shown.

For more information on using the calibration wizard, consult *LoggerNet* or *RTDAQ* Help.

7.9.11.4 Field Calibration Numeric Monitor Procedures

Manual field calibration through the numeric monitor (in lieu of a CR1000KD Keyboard / Display is presented here to introduce the use and function of the **FieldCal()** and **FieldCalStrain()** instructions. This section is not a comprehensive treatment of field-calibration topics. The most comprehensive resource to date covering use of **FieldCal()** and **FieldCalStrain()** is *RTDAQ* software documentation available at *www.campbellsci.com* *http://www.campbellsci.com*. Be aware of the following precautions:

- The CR800 does not check for out-of-bounds values in mode variables.
- Valid mode variable entries are **1** or **4**.

Before, during, and after calibration, one of the following codes will be stored in the **CalMode** variable:

Table 28. FieldCal() Codes

Value Returned	*State*
-1	Error in the calibration setup
-2	Multiplier set to ***0*** or ***NAN***; measurement = **NAN**
-3	***Reps*** is set to a value other than ***1*** or the size of ***MeasureVar***
0	No calibration
1	Ready to calculate (***KnownVar*** holds the first of a two point calibration)
2	Working
3	First point done (only applicable for two point calibrations)
4	Ready to calculate (***KnownVar*** holds the second of a two-point calibration)
5	Working (only applicable for two point calibrations)
6	Calibration complete

7.9.11.4.1 One-Point Calibrations (Zero or Offset)

Zero operation applies an offset of equal magnitude but opposite sign. For example, when performing a zeroing operation on a measurement of 15.3, the value –15.3 will be added to subsequent measurements.

Offset operation applies an offset of equal magnitude and same sign. For example, when performing an offset operation on a measurement of 15.3, the value 15.3 will be added to subsequent measurements.

See *FieldCal() Zero or Tare (Opt 0) Example* (p. 207) and *FieldCal() Offset (Opt 1) Example* (p. 209) for demonstration programs:

1. Use a separate **FieldCal()** instruction and variables for each sensor to be calibrated. In the CRBasic program , put the **FieldCal()** instruction immediately below the associated measurement instruction.
2. Set mode variable = 0 or 6 before starting.
3. Place the sensor into zeroing or offset condition.
4. Set ***KnownVar*** variable to the offset or zero value.
5. Set mode variable = **1** to start calibration.

7.9.11.4.2 Two-Point Calibrations (gain and offset)

Use this two-point calibration procedure to adjust multipliers (slopes) and offsets (y intercepts). See *FieldCal() Slope and Offset (Opt 2) Example* (p. 211) and *FieldCal() Slope (Opt 3) Example* (p. 214) for demonstration programs:

1. Use a separate **FieldCal()** instruction and separate variables for each sensor to be calibrated.
2. Ensure mode variable = **0** or **6** before starting.
   a. If **Mode** > **0** and ≠ **6**, calibration is in progress.
   b. If **Mode** < **0**, calibration encountered an error.
3. Place sensor into first known point condition.
4. Set ***KnownVar*** variable to first known point.
5. Set ***Mode*** variable = **1** to start first part of calibration.
   a. ***Mode*** = **2** (automatic) during the first point calibration.
   b. ***Mode*** = **3** (automatic) when the first point is completed.
6. Place sensor into second known point condition.
7. Set ***KnownVar*** variable to second known point.
8. Set ***Mode*** = **4** to start second part of calibration.
   a. ***Mode*** = **5** (automatic) during second point calibration.
   b. ***Mode*** = **6** (automatic) when calibration is complete.

7.9.11.4.3 Zero Basis Point Calibration

Zero-basis calibration (**FieldCal()** instruction ***Option 4***) is designed for use with static vibrating-wire measurements. It loads values into zero-point variables to track conditions at the time of the zero calibration. See *FieldCal() Zero Basis (Opt 4) Example* (p. 216) for a demonstration program.

7.9.11.5 Field Calibration Examples

FieldCal() has the following calibration options:

- Zero
- Offset
- Two-point slope and offset
- Two-point slope only
- Zero basis (designed for use with static vibrating-wire measurements)

These demonstration programs are provided as an aid in becoming familiar with the **FieldCal()** features at a test bench without actual sensors. For the purpose of the demonstration, sensor signals are simulated by CR800 terminals configured for excitation. To reset tests, use the support software *File Control* (p. 488) menu commands to delete .cal files, and then send the demonstration program again to the CR800. Term equivalents are as follows:

"offset" = "y- intercept" = "zero"
"multiplier" = "slope" = "gain"

7.9.11.5.1 FieldCal() Zero or Tare (Opt 0) Example

Most CRBasic measurement instructions have a ***multiplier*** and ***offset*** parameter. **FieldCal()** ***Option 0*** adjusts the ***offset*** argument such that the output of the sensor being calibrated is set to the value of the **FieldCal()** ***KnownVar*** parameter, which is set to **0**. Subsequent measurements have the same offset subtracted. ***Option 0*** does not affect the ***multiplier*** argument.

Example Case: A sensor measures the relative humidity (RH) of air. Multiplier is known to be stable, but sensor offset drifts and requires regular zeroing in a desiccated chamber. The following procedure zeros the RH sensor to obtain the calibration report shown. To step through the example, use the CR1000KD Keyboard Display or software *numeric monitor* (p. 495) to change variable values as directed.

Table 29. Calibration Report for Relative Humidity Sensor

CRBasic Variable	*At Deployment*	*At 30-Day Service*
SimulatedRHSignal output	***100*** mV	***105*** mV
KnownRH (desiccated chamber)	***0*** %	***0*** %
RHMultiplier	***0.05*** % / mV	***0.05*** % / mV
RHOffset	**-5** %	**-5.25** %
RH	**0** %	**0** %

1. Send CRBasic example *FieldCal() Zero* (p. 208) to the CR800. A terminal configured for excitation has been programmed to simulate a sensor output.

2. To place the simulated RH sensor in a simulated-calibration condition (in the field it would be placed in a desiccated chamber), place a jumper wire between terminals **VX1** and **SE1**. The following variables are preset by the program: ***SimulatedRHSignal*** = ***100***, ***KnownRH*** = ***0***.
3. To start the 'calibration', set variable ***CalMode*** = ***1***. When ***CalMode*** increments to **6**, zero calibration is complete. Calibrated ***RHOffset*** will equal **-5**% at this stage of this example.
4. To continue this example and simulate a zero-drift condition, set variable ***SimulatedRHSignal*** = ***105***.
5. To simulate conditions for a 30-day-service calibration, again with desiccated chamber conditions, keep variable ***KnownRH*** = ***0.0***. Set variable ***CalMode*** = ***1*** to start calibration. When ***CalMode*** increments to **6**, simulated 30-day-service zero calibration is complete. Calibrated ***RHOffset*** will equal **-5.2** %.

CRBasic Example 39. FieldCal() **Zero**

```
'This program example demonstrates the use of FieldCal() in calculating and applying a zero
'calibration.  A zero calibration measures the signal magnitude of a sensor in a known zero
'condition and calculates the negative magnitude to use as an offset in subsequent
'measurements.  It does not affect the multiplier.
'
'This program demonstrates the zero calibration with the following procedure:
'  -- Simulate a signal from a relative-humidity sensor.
'  -- Measure the 'sensor' signal.
'  -- Calculate and apply a zero calibration.


'You can set up the simulation by loading this program into the CR800 and interconnecting
'the following terminals with a jumper wire to simulate the relative-humidity sensor signal
'as follows:
'  Vx1 --- SE1

'For the simulation, the initial 'sensor' signal is set automatically.  Start the zero routine
'by setting variable CalMode = 1.  When CalMode = 6 (will occur automatically after 10
'measurements), the routine is complete. Note the new value in variable RHOffset.  Now
'enter the following millivolt value as the simulated sensor signal and note how the new
'offset is added to the measurement:
'  SimulatedRHSignal = 1000

'NOTE: This program places a .cal file on the CPU: drive of the CR800. The .cal file must
'be erased to reset the demonstration.

'DECLARE SIMULATED SIGNAL VARIABLE AND SET INITIAL MILLIVOLT SIGNAL MAGNITUDE
Public SimulatedRHSignal = 100

'DECLARE CALIBRATION STANDARD VARIABLE AND SET PERCENT RH MAGNITUDE
Public KnownRH = 0

'DECLARE MEASUREMENT RESULT VARIABLE.
Public RH

'DECLARE OFFSET RESULT VARIABLE
Public RHOffset
```

```
'DECLARE VARIABLE FOR FieldCal() CONTROL
Public CalMode

'DECLARE DATA TABLE FOR RETRIEVABLE CALIBRATION RESULTS
DataTable(CalHist,NewFieldCal,200)
  SampleFieldCal
EndTable

BeginProg
  'LOAD CALIBRATION CONSTANTS FROM FILE CPU:CALHIST.CAL
  'Effective after the zero calibration procedure (when variable CalMode = 6)
  LoadFieldCal(true)

  Scan(100,mSec,0,0)

    'SIMULATE SIGNAL THEN MAKE THE MEASUREMENT
    'Zero calibration is applied when variable CalMode = 6
    ExciteV(Vx1,SimulatedRHSignal,0)
    VoltSE(RH,1,mV2500,1,1,0,250,0.05,RHOffset)

    'PERFORM A ZERO CALIBRATION.
    'Start by setting variable CalMode = 1. Finished when variable CalMode = 6.
    'FieldCal(Function, MeasureVar, Reps, MultVar, OffsetVar, Mode, KnownVar, Index, Avg)
    FieldCal(0,RH,1,0,RHOffset,CalMode,KnownRH,1,30)

    'If there was a calibration, store calibration values into data table CalHist
    CallTable(CalHist)

  NextScan
EndProg
```

7.9.11.5.2 FieldCal() Offset (Opt 1) Example

Most CRBasic measurement instructions have a ***multiplier*** and ***offset*** parameter. **FieldCal()** ***Option 1*** adjusts the ***offset*** argument such that the output of the sensor being calibrated is set to the magnitude of the **FieldCal()** ***KnownVar*** parameter. Subsequent measurements have the same offset added. ***Option 0*** does not affect the ***multiplier*** argument. ***Option 0*** does not affect the ***multiplier*** argument.

Example Case: A sensor measures the salinity of water. Multiplier is known to be stable, but sensor offset drifts and requires regular offset correction using a standard solution. The following procedure offsets the measurement to obtain the calibration report shown.

Table 30. Calibration Report for Salinity Sensor

CRBasic Variable	*At Deployment*	*At Seven-Day Service*
SimulatedSalinitySignal output	**1350** mV	**1345** mV
KnownSalintiy (standard solution)	**30** mg/l	**30** mg/l
SalinityMultiplier	**0.05** mg/l/mV	**0.05** mg/l/mV
SalinityOffset	**-37.50** mg/l	**-37.23** mg/l
Salinity reading	**30** mg/l	**30** mg/l

1. Send CRBasic example *FieldCal() Offset* (p. 210) to the CR800. A terminal configured for excitation has been programmed to simulate a sensor output.

2. To simulate the salinity sensor in a simulated-calibration condition, (in the field it would be placed in a 30 mg/l standard solution), place a jumper wire between terminals **VX1** and **SE1**. The following variables are preset by the program: ***SimulatedSalinitySignal*** = ***1350***, ***KnownSalinity*** = ***30***.
3. To start a simulated calibration, set variable ***CalMode*** = ***1***. When ***CalMode*** increments to ***6***, offset calibration is complete. The calibrated offset will equal ***-37.48*** mg/l.
4. To continue this example and simulate an offset-drift condition, set variable ***SimulatedSalinitySignal*** = ***1345***.
5. To simulate seven-day-service calibration conditions (30 mg/l standard solution), the variable ***KnownSalinity*** remains at ***30.0***. Change the value in variable ***CalMode*** to ***1*** to start the calibration. When ***CalMode*** increments to ***6***, the seven-day-service offset calibration is complete. Calibrated offset will equal ***-37.23*** mg/l.

CRBasic Example 40. FieldCal() **Offset**

```
'This program example demonstrates the use of FieldCal() in calculating and applying an
'offset calibration.  An offset calibration compares the signal magnitude of a sensor to a
'known standard and calculates an offset to adjust the sensor output to the known value.
'The offset is then used to adjust subsequent measurements.

'This program demonstrates the offset calibration with the following procedure:
'  -- Simulate a signal from a salinity sensor.
'  -- Measure the 'sensor' signal.
'  -- Calculate and apply an offset.
'
'You can set up the simulation by loading this program into the CR800 and interconnecting the
'following terminals with a jumper wire to simulate the salinity sensor signal as follows:
'  Vx1 --- SE1

'For the simulation, the value of the calibration standard and the initial 'sensor' signal
'are set automatically.  Start the calibration routine by setting variable CalMode = 1.  When
'CalMode = 6 (will occur automatically after 10 measurements), the routine is complete.
'Note the new value in variable SalinityOffset.  Now enter the following millivolt value as
'the simulated sensor signal and note how the new offset is added to the measurement:
'  SimulatedSalinitySignal = 1345

'NOTE: This program places a .cal file on the CPU: drive of the CR800. The .cal file must
'be erased to reset the demonstration.

'DECLARE SIMULATED SIGNAL VARIABLE AND SET INITIAL MAGNITUDE
Public SimulatedSalinitySignal = 1350         'mg/l

'DECLARE CALIBRATION STANDARD VARIABLE AND SET MAGNITUDE
Public KnownSalinity = 30                     'mg/l
```

```
'DECLARE MEASUREMENT RESULT VARIABLE.
Public Salinity

'DECLARE OFFSET RESULT VARIABLE
Public SalinityOffset

'DECLARE VARIABLE FOR FieldCal() CONTROL
Public CalMode

'DECLARE DATA TABLE FOR RETRIEVABLE CALIBRATION RESULTS
DataTable(CalHist,NewFieldCal,200)
  SampleFieldCal
EndTable

BeginProg
  'LOAD CALIBRATION CONSTANTS FROM FILE CPU:CALHIST.CAL
  'Effective after the zero calibration procedure (when variable CalMode = 6)
  LoadFieldCal(true)

  Scan(100,mSec,0,0)

    'SIMULATE SIGNAL THEN MAKE THE MEASUREMENT
    'Zero calibration is applied when variable CalMode = 6
    ExciteV(Vx1,SimulatedSalinitySignal,0)
    VoltSE(Salinity,1,mV2500,1,1,0,250,0.05,SalinityOffset)

    'PERFORM AN OFFSET CALIBRATION.
    'Start by setting variable CalMode = 1. Finished when variable CalMode = 6.
    'FieldCal(Function, MeasureVar, Reps, MultVar, OffsetVar, Mode, KnownVar, Index, Avg)
    FieldCal(1,Salinity,1,0,SalinityOffset,CalMode,KnownSalinity,1,30)

    'If there was a calibration, store calibration values into data table CalHist
    CallTable(CalHist)

  NextScan
EndProg
```

7.9.11.5.3 FieldCal() Slope and Offset (Opt 2) Example

Most CRBasic measurement instructions have a ***multiplier*** and ***offset*** parameter. **FieldCal()** ***Option 2*** adjusts the ***multiplier*** and ***offset*** arguments such that the output of the sensor being calibrated is set to a value consistent with the linear relationship that intersects two known points sequentially entered in the **FieldCal()** ***KnownVar*** parameter. Subsequent measurements are scaled with the same multiplier and offset.

Example Case: A meter measures the volume of water flowing through a pipe. Multiplier and offset are known to drift, so a two-point calibration is required periodically at known flow rates. The following procedure adjusts multiplier and offset to correct for meter drift as shown in the calibration report below. Note that the flow meter outputs millivolts inversely proportional to flow.

Table 31. Calibration Report for Flow Meter

CRBasic Variable	At Deployment	At Seven-Day Service
SimulatedFlowSignal	***300*** mV	***285*** mV
KnownFlow	***30*** L/s	***30*** L/s
SimulatedFlowSignal	***550*** mV	***522*** mV
KnownFlow	***10*** L/s	***10*** L/s
FlowMultiplier	**-0.0799** L/s/mV	**-0.0841** L/s/mV
FlowOffset	**53.90** L	**53.92** L

1. Send CRBasic example *FieldCal() Two-Point Slope and Offset* (p. 212) to the CR800.
2. To place the simulated flow sensor in a simulated calibration condition (in the field a real sensor would be placed in a condition of know flow), place a jumper wire between terminals **VX1** and **SE1**.
3. Perform the simulated deployment calibration as follows:
   a. For the first point, set variable ***SimulatedFlowSignal*** = ***300***. Set variable ***KnownFlow*** = ***30.0***.
   b. Start the calibration by setting variable ***CalMode*** = **1**.
   c. When ***CalMode*** increments to **3**, for the second point, set variable ***SimulatedFlowSignal*** = ***550***. Set variable ***KnownFlow*** = ***10***.
   d. Resume the deployment calibration by setting variable ***CalMode*** = ***4***
4. When variable ***CalMode*** increments to **6**, the deployment calibration is complete. Calibrated multiplier is **-0.08;** calibrated offset is **53.9**.
5. To continue this example, suppose the simulated sensor multiplier and offset drift. Simulate a seven-day service calibration to correct the drift as follows:
   a. Set variable ***SimulatedFlowSignal*** = ***285***. Set variable ***KnownFlow*** = ***30.0***.
   b. Start the seven-day service calibration by setting variable ***CalMode*** = ***1***.
   c. When ***CalMode*** increments to **3**, set variable ***SimulatedFlowSignal*** = ***522***. Set variable ***KnownFlow*** = ***10***.
   d. Resume the calibration by setting variable **CalMode** = **4**
6. When variable **CalMode** increments to **6**, the calibration is complete. The corrected multiplier is **-0.08**; offset is **53.9**.

CRBasic Example 41. FieldCal() Two-Point Slope and Offset

```
'This program example demonstrates the use of FieldCal() in calculating and applying a
'multiplier and offset calibration.  A multiplier and offset calibration compares signal
'magnitudes of a sensor to known standards.  The calculated multiplier and offset scale the
'reported magnitude of the sensor to a value consistent with the linear relationship that
'intersects known points sequentially entered in to the FieldCal() KnownVar parameter.
'Subsequent measurements are scaled by the new multiplier and offset.
```

```
'This program demonstrates the multiplier and offset calibration with the following procedure:
'  -- Simulate a signal from a flow sensor.
'  -- Measure the 'sensor' signal.
'  -- Calculate and apply a multiplier and offset.

'You can set up the simulation by loading this program into the CR800 and interconnecting
'the following terminals with a jumper wire to simulate a flow sensor signal as follows:
'  Vx1 --- SE1

'For the simulation, the value of the calibration standard and the initial 'sensor' signal
'are set automatically.  Start the multiplier-and-offset routine by setting variable
'CalMode = 1.  The value in CalMode will increment automatically.  When CalMode = 3, set
'variables SimulatedFlowSignal = 550 and KnownFlow = 10, then set CalMode = 4. CalMode
'will again increment automatically.  When CalMode = 6 (occurs automatically after 10
'measurements), the routine is complete. Note the new values in variables FlowMultiplier and
'FlowOffest.  Now enter a new value in the simulated sensor signal as follows and note
'how the new multiplier and offset scale the measurement:
'  SimulatedFlowSignal = 1000

'NOTE: This program places a .cal file on the CPU: drive of the CR800. The .cal file must
'be erased to reset the demonstration.

'DECLARE SIMULATED SIGNAL VARIABLE AND SET INITIAL MAGNITUDE
Public SimulatedFlowSignal = 300                  'Excitation mV, second setting is 550

'DECLARE CALIBRATION STANDARD VARIABLE AND SET MAGNITUDE
Public KnownFlow = 30                             'Known flow, second setting is 10

'DECLARE MEASUREMENT RESULT VARIABLE.
Public Flow

'DECLARE MULTIPLIER AND OFFSET RESULT VARIABLES AND SET INITIAL MAGNITUDES
Public FlowMultiplier = 1
Public FlowOffset = 0

'DECLARE VARIABLE FOR FieldCal() CONTROL
Public CalMode


'DECLARE DATA TABLE FOR RETRIEVABLE CALIBRATION RESULTS
DataTable(CalHist,NewFieldCal,200)
  SampleFieldCal
EndTable

BeginProg
  'LOAD CALIBRATION CONSTANTS FROM FILE CPU:CALHIST.CAL
  'Effective after the zero calibration procedure (when variable CalMode = 6)
  LoadFieldCal(true)

  Scan(100,mSec,0,0)
    'SIMULATE SIGNAL THEN MAKE THE MEASUREMENT
    'Multiplier calibration is applied when variable CalMode = 6
    ExciteV(Vx1,SimulatedFlowSignal,0)
    VoltSE(Flow,1,mV2500,1,1,0,250,FlowMultiplier,FlowOffset)
```

```
    'PERFORM A MULTIPLIER CALIBRATION.
    'Start by setting variable CalMode = 1. Finished when variable CalMode = 6.
    'FieldCal(Function, MeasureVar, Reps, MultVar, OffsetVar, Mode, KnownVar, Index, Avg)
    FieldCal(2,Flow,1,FlowMultiplier,FlowOffset,CalMode,KnownFlow,1,30)

    'If there was a calibration, store it into a data table
    CallTable(CalHist)

  NextScan
EndProg
```

7.9.11.5.4 FieldCal() Slope (Opt 3) Example

Most CRBasic measurement instructions have a ***multiplier*** and ***offset*** parameter. **FieldCal()** ***Option 3*** adjusts the ***multiplier*** argument such that the output of the sensor being calibrated is set to a value consistent with the linear relationship that intersects two known points sequentially entered in the **FieldCal()** ***KnownVar*** parameter. Subsequent measurements are scaled with the same multiplier. **FieldCal()** ***Option 3*** does not affect ***offset***.

Some measurement applications do not require determination of offset. Frequency analysis, for example, may only require relative data to characterize change.

Example Case: A soil-water sensor is to be used to detect a pulse of water moving through soil. A pulse of soil water can be detected with an offset, but sensitivity to the pulse is important, so an accurate multiplier is essential. To adjust the sensitivity of the sensor, two soil samples, with volumetric water contents of 10% and 35%, will provide two known points.

Table 32. Calibration Report for Water Content Sensor

CRBasic Variable	*At Deployment*
SimulatedWaterContentSignal	***175*** mV
KnownWC	***10*** %
SimulatedWaterContentSignal	***700*** mV
KnownWC	***35*** %
WCMultiplier	**0.0476** %/mV

The following procedure sets the sensitivity of a simulated soil water-content sensor.

1. Send CRBasic example *FieldCal() Multiplier* (p. 215) to the CR800.
2. To simulate the soil-water sensor signal, place a jumper wire between terminals **VX1** and **SE1**.
3. Simulate deployment-calibration conditions in two stages as follows:
   a. Set variable ***SimulatedWaterContentSignal*** to ***175***. Set variable ***KnownWC*** to ***10.0***.
   b. Start the calibration by setting variable ***CalMode*** = ***1***.

c. When ***CalMode*** increments to **3**, set variable ***SimulatedWaterContentSignal*** to ***700***. Set variable ***KnownWC*** to ***35***.

d. Resume the calibration by setting variable ***CalMode*** = ***4***

4. When variable ***CalMode*** increments to ***6***, the calibration is complete. Calibrated multiplier is ***0.0476***.

CRBasic Example 42. FieldCal() **Multiplier**

```
'This program example demonstrates the use of FieldCal() in calculating and applying a
'multiplier only calibration. A multiplier calibration compares the signal magnitude of a
'sensor to known standards.  The calculated multiplier scales the reported magnitude of the
'sensor to a value consistent with the linear relationship that intersects known points
'sequentially entered in to the FieldCal() KnownVar parameter.  Subsequent measurements are
'scaled by the multiplier.

'This program demonstrates the multiplier calibration with the following procedure:
'  -- Simulate a signal from a water content sensor.
'  -- Measure the 'sensor' signal.
'  -- Calculate and apply an offset.
'
'You can set up the simulation by loading this program into the CR800 and interconnecting
'the following terminals with a jumper wire to simulate a water content sensor signal as
'follows:
'  Vx1 --- SE1

'For the simulation, the value of the calibration standard and the initial 'sensor' signal
'are set automatically.  Start the multiplier routine by setting variable CalMode = 1.  When
'CalMode = 6 (occurs automatically after 10 measurements), the routine is complete. Note the
'new value in variable WCMultiplier.  Now enter a new value in the simulated sensor signal
'as follows and note how the new multiplier scales the measurement:
'  SimulatedWaterContentSignal = 350

'NOTE: This program places a .cal file on the CPU: drive of the CR800. The .cal file must
'be erased to reset the demonstration.

'DECLARE SIMULATED SIGNAL VARIABLE AND SET INITIAL MAGNITUDE
Public SimulatedWaterContentSignal = 175     'mV, second setting is 700 mV

'DECLARE CALIBRATION STANDARD VARIABLE AND SET MAGNITUDE
Public KnownWC = 10                          '% by Volume, second setting is 35%

'DECLARE MEASUREMENT RESULT VARIABLE.
Public WC

'DECLARE MULTIPLIER RESULT VARIABLE AND SET INITIAL MAGNITUDE
Public WCMultiplier = 1

'DECLARE VARIABLE FOR FieldCal() CONTROL
Public CalMode

'DECLARE DATA TABLE FOR RETRIEVABLE CALIBRATION RESULTS
DataTable(CalHist,NewFieldCal,200)
  SampleFieldCal
EndTable
```

```
BeginProg
  'LOAD CALIBRATION CONSTANTS FROM FILE CPU:CALHIST.CAL
  'Effective after the zero calibration procedure (when variable CalMode = 6)
  LoadFieldCal(true)

  Scan(100,mSec,0,0)
    'SIMULATE SIGNAL THEN MAKE THE MEASUREMENT
    'Multiplier calibration is applied when variable CalMode = 6
    ExciteV(Vx1,SimulatedWaterContentSignal,0)
    VoltSE(WC,1,mV2500,1,1,0,250,WCMultiplier,0)


    'PERFORM A MULTIPLIER CALIBRATION.
    'Start by setting variable CalMode = 1. Finished when variable CalMode = 6.
    'FieldCal(Function, MeasureVar, Reps, MultVar, OffsetVar, Mode, KnownVar, Index, Avg)
    FieldCal(3,WC,1,WCMultiplier,0,CalMode,KnownWC,1,30)

    'If there was a calibration, store it into data table CalHist
    CallTable(CalHist)

  NextScan
EndProg
```

7.9.11.5.5 FieldCal() Zero Basis (Opt 4) Example -- 8 10 30

Zero-basis calibration (**FieldCal()** instruction ***Option 4***) is designed for use in static vibrating-wire measurements. For more information, refer to these manuals available at www.campbellsci.com:

AVW200-Series Two-Channel Vspect Vibrating-Wire Measurement Device
CR6 Measurement and Control Datalogger Operators Manual

7.9.11.6 Field Calibration Strain Examples

Related Topics:
- *Strain Measurements — Overview* (p. 68)
- *Strain Measurements — Details* (p. 324)
- *FieldCalStrain() Examples* (p. 216)

Strain-gage systems consist of one or more strain gages, a resistive bridge in which the gage resides, and a measurement device such as the CR800 datalogger. The **FieldCalStrain()** instruction facilitates shunt calibration of strain-gage systems and is designed exclusively for strain applications wherein microstrain is the unit of measure. The **FieldCal()** instruction (*FieldCal() Examples* (p. 207)) is typically used in non-microstrain applications.

Shunt calibration of strain-gage systems is common practice. However, the technique provides many opportunities for misapplication and misinterpretation. This section is not intended to be a primer on shunt-calibration theory, but only to introduce use of the technique with the CR800 datalogger. Campbell Scientific strongly urges users to study shunt-calibration theory from other sources. A thorough treatment of strain gages and shunt-calibration theory is available from Vishay using search terms such as 'micro-measurements', 'stress analysis', 'strain gages', 'calculator list', at:

http://www.vishaypg.com

Campbell Scientific application engineers also have resources that may assist you with strain-gage applications.

7.9.11.6.1 Field Calibration Strain Examples

1. Shunt calibration does not calibrate the strain gage itself.
2. Shunt calibration does compensate for long leads and non-linearity in the resistive bridge. Long leads reduce sensitivity because of voltage drop. **FieldCalStrain()** uses the known value of the shunt resistor to adjust the gain (multiplier / span) to compensate. The gain adjustment (S) is incorporated by **FieldCalStrain()** with the manufacturer's gage factor (GF), becoming the adjusted gage factor (GF_{adj}), which is then used as the gage factor in **StrainCalc()**. GF is stored in the CAL file and continues to be used in subsequent calibrations. Non-linearity of the bridge is compensated for by selecting a shunt resistor with a value that best simulates a measurement near the range of measurements to be made. Strain-gage manufacturers typically specify and supply a range of resistors available for shunt calibration.
3. Shunt calibration verifies the function of the CR800.
4. The zero function of **FieldCalStrain()** allows a particular strain to be set as an arbitrary zero, if desired. Zeroing is normally done after the shunt calibration.

Zero and shunt options can be combined ina single CRBasic program.

CRBasic example *FieldCalStrain() Calibration* (p. 218) is provided to demonstrate use of **FieldCalStrain()** features. If a strain gage configured as shown in figure *Quarter-Bridge Strain-Gage with RC Resistor Shunt* (p. 218) is not available, strain signals can be simulated by building the simple circuit, substituting a 1000 Ω potentiometer for the strain gage. To reset calibration tests, use the support software *File Control* (p. 488) menu to delete .cal files, and then send the demonstration program again to the CR800.

Example Case: A 1000 Ω strain gage is placed into a resistive bridge at position R1. The resulting circuit is a quarter-bridge strain gage with alternate shunt-resistor (Rc) positions shown. Gage specifications indicate that the gage factor is 2.0 and that with a 249 kΩ shunt, measurement should be about 2000 microstrain.

Send CRBasic example *FieldCalStrain() Calibration* (p. 218) as a program to a CR800 datalogger.

7.9.11.6.2 Field Calibration Strain Examples

CRBasic example *FieldCalStrain() Calibration* (p. 218) is provided to demonstrate use of **FieldCalStrain()** features. If a strain gage configured as shown in figure *Quarter-Bridge Strain-Gage with RC Resistor Shunt* (p. 218) is not available, strain signals can be simulated by building the simple circuit, substituting a 1000 Ω potentiometer for the strain gage. To reset calibration tests, use the support software *File Control* (p. 488) menu to delete .cal files, and then send the demonstration program again to the CR800.

Case: A 1000 Ω strain gage is placed into a resistive bridge at position R1. The resulting circuit is a quarter-bridge strain gage with alternate shunt-resistor (Rc) positions shown. Gage specifications indicate that the gage factor is 2.0 and that with a 249 kΩ shunt, measurement should be about 2000 microstrain.

Send CRBasic example *FieldCalStrain() Calibration* (p. 218) as a program to a CR800 datalogger.

Figure 58. Quarter-Bridge Strain-Gage with RC Resistor Shunt

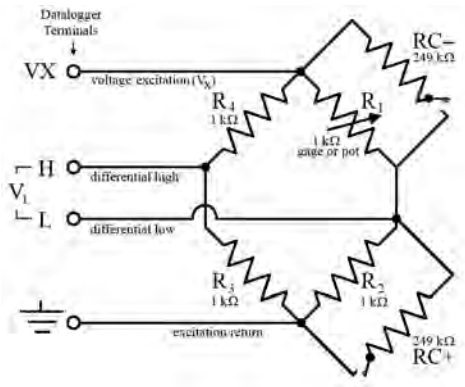

CRBasic Example 43. FieldCalStrain() Calibration

```
'This program example demonstrates the use of the FieldCalStrain() instruction by measuring
'quarter-bridge strain-gage measurements.

Public Raw_mVperV
Public MicroStrain

'Variables that are arguments in the Zero Function
Public Zero_Mode
Public Zero_mVperV

'Variables that are arguments in the Shunt Function
Public Shunt_Mode
Public KnownRes
Public GF_Adj
Public GF_Raw

'---------------------------- Tables ----------------------------
DataTable(CalHist,NewFieldCal,50)
  SampleFieldCal
EndTable

'//////////////////////////// PROGRAM ////////////////////////////
BeginProg

  'Set Gage Factors
  GF_Raw = 2.1
  GF_Adj = GF_Raw 'The adj Gage factors are used in the calculation of uStrain

  'If a calibration has been done, the following will load the zero or
  'Adjusted GF from the Calibration file
  LoadFieldCal(True)
```

```
  Scan(100,mSec,100,0)
    'Measure Bridge Resistance
    BrFull(Raw_mVperV,1,mV25,1,Vx1,1,2500,True ,True ,0,250,1.0,0)

    'Calculate Strain for 1/4 Bridge (1 Active Element)
    StrainCalc(microStrain,1,Raw_mVperV,Zero_mVperV,1,GF_Adj,0)

    'Steps (1) & (3): Zero Calibration
    'Balance bridge and set Zero_Mode = 1 in numeric monitor. Repeat after
    'shunt calibration.
    FieldCalStrain(10,Raw_mVperV,1,0,Zero_mVperV,Zero_Mode,0,1,10,0 ,microStrain)

    'Step (2) Shunt Calibration
    'After zero calibration, and with bridge balanced (zeroed), set
    'KnownRes = to gage resistance (resistance of gage at rest), then set
    'Shunt_Mode = 1. When Shunt_Mode increments to 3, position shunt resistor
    'and set KnownRes = shunt resistance, then set Shunt_Mode = 4.
    FieldCalStrain(13,MicroStrain,1,GF_Adj,0,Shunt_Mode,KnownRes,1,10,GF_Raw,0)

    CallTable CalHist
  NextScan
EndProg
```

7.9.11.6.3 FieldCalStrain() Quarter-Bridge Shunt Example

With CRBasic example *FieldCalStrain() Calibration* (p. 218) sent to the CR800, and the strain gage stable, use the CR1000KD Keyboard Display or software numeric monitor to change the value in variable **KnownRes** to the nominal resistance of the gage, **1000** Ω, as shown in figure *Strain-Gage Shunt Calibration Start* (p. 219). Set **Shunt_Mode** to **1** to start the two-point shunt calibration. When **Shunt_Mode** increments to **3**, the first step is complete.

To complete the calibration, shunt R1 with the 249 kΩ resistor. Set variable **KnownRes** to **249000**. As shown in figure *Strain-Gage Shunt Calibration Finish* (p. 220), set **Shunt_Mode** to **4**. When **Shunt_Mode** = **6**, shunt calibration is complete.

Figure 59. Strain-Gage Shunt Calibration Start

Raw mVperV	-1.109
MicroStrain	2,117
Zero Mode	0
Zero mVperV	0.0000
Shunt Mode	1
KnownRes	1,000
GF Adj	2.100
GF Raw	2.100

Figure 60. Strain-Gage Shunt Calibration Finish

Raw mVperV	-1.109
MicroStrain	-2,215
Zero Mode	0
Zero mVperV	0.0000
Shunt Mode	6
KnownRes	249,000
GF Adj	-2.008
GF Raw	2.000

7.9.11.6.4 FieldCalStrain() Quarter-Bridge Zero

Continuing from *FieldCalStrain() Quarter-Bridge Shunt Example* (p. 219), keep the 249 kΩ resistor in place to simulate a strain. Using the CR1000KD Keyboard Display or software numeric monitor, change the value in variable **Zero_Mode** to **1** to start the zero calibration as shown in figure *Zero Procedure Start* (p. 220). When **Zero_Mode** increments to **6**, zero calibration is complete as shown in figure *Zero Procedure Finish* (p. 220).

Figure 61. Zero Procedure Start

Raw mVperV	-1.110
MicroStrain	-2,214
Zero Mode	1
Zero mVperV	0.0000
Shunt Mode	6
KnownRes	249,000
GF Adj	-2.010
GF Raw	2.000

Figure 62. Zero Procedure Finish

Raw mVperV	-1.110
MicroStrain	0
Zero Mode	6
Zero mVperV	-1.1096
Shunt Mode	6
KnownRes	249,000
GF Adj	-2.010
GF Raw	2.000

7.9.12 Measurement: Excite, Delay, Measure

This example demonstrates how to make voltage measurements that require excitation of controllable length prior to measurement. Overcoming the delay caused by a very long cable length on a sensor is a common application for this technique.

CRBasic Example 44. Measurement with Excitation and Delay

```
'This program example demonstrates how to perform an excite/delay/measure operation.
'In this example, the system requires 1 s of excitation to stabilize before the sensors
'are measured.  A single-ended measurement is made, and a separate differential measurement
'is made.  To see this program in action, connect the following terminal pairs to simulate
'sensor connections:

'     Vx1 ------ SE1
'     Vx2 ------ DIFF 2 H
'     DIFF 2 L ------ Ground Symbol
'
'With these connections made, variables VoltageSE and VoltageDiff will equal 2500 mV.

'Declare variables.
Public VoltageSE As Float
Public VoltageDIFF As Float

'Declare data table
DataTable (Voltage,True,-1)
  Sample (1,VoltageSE,Float)
  Sample (1,VoltageDIFF,Float)
EndTable

BeginProg

  Scan(5,sec,0,0)

    'Excite - delay 1 second - single-ended measurement:
    ExciteV (Vx1,2500,0) '<<<<Note: Delay = 0
    Delay (0,1000,mSec)
    VoltSe (VoltageSE,1,mV5000,1,1,0,250,1.0,0)

    'Excite - delay 1 second - differential measurement:
    ExciteV (Vx2,2500,0) '<<<<Note: Delay = 0
    Delay (0,1000,mSec)
    VoltDiff (VoltageDIFF,1,mV5000,2,True,0,250,1.0,0)

    'Write data to final-data memory
    CallTable Voltage

  NextScan

EndProg
```

7.9.13 Measurement: Faster Analog Rates

Certain data acquisition applications require the CR800 to make analog measurements at rates faster than once per second (> 1 *Hz* (p. 491)). The CR800 can make continuous measurements at rates up to 100 Hz, and *bursts* (p. 483) of

measurements at rates up to 2000 Hz. Following is a discussion of fast measurement programming techniques in association with **VoltSE(),** single-ended analog voltage measurement instruction. Techniques discussed can also be used with the following instructions:

```
VoltSE()
VoltDiff()
TCDiff()
TCSE()
BrFull()
BrFull6W()
BrHalf()
BrHalf3W()
BrHalf4W()
```

The table *Summary of Analog Voltage Measurement Rates* *(p. 222),* summarizes the programming techniques used to make three classes of fast measurement: 100 Hz maximum-rate, 600 Hz maximum-rate, and 2000 Hz maximum-rate. 100 Hz measurements can have a 100% *duty cycle* *(p. 487).* That is, measurements are not normally suspended to allow processing to catch up. Suspended measurements equate to lost measurement opportunities and may not be desirable. 600 Hz and 2000 Hz measurements (measurements exceeding 100 Hz) have duty cycles less than 100%.

Table 33. Summary of Analog Voltage Measurement Rates

Maximum Rate	100 Hz	600 Hz	2000 Hz
Number of Simultaneous Inputs	Multiple inputs	Fewer inputs	One input
Maximum Duty Cycle	100%	< 100%	< 100%
Maximum Measaurements Per Burst	N/A	Variable	65535
Description	Near simultaneous measurements on multiple channels Up to 8 sequential differential or 16 single-ended channels. Buffers are continuously "recycled", so no skipped scans.	Near simultaneous measurements on fewer channels Buffers maybe consumed and only freed after a skipped scan. Allocating more buffers usually means more time will elapse between skipped scans.	A single CRBasic measurement instruction bursts on one channel. Multiple channels are measured using multiple instructions, but the burst on one channel completes before the burst on the next channel begins.
Analog Terminal Sequence	Differential: 1, 2, 3, 4, 5, 6, 7, 8, then repeat. Single-ended: 1, 2, 3, 4, 5, 6, 7, 8, 9, 10, 11, 12, 13, 14, 15, 16, then repeat.	Differential and single-ended: 1, 2, 1, 2, and so forth.	1, 1, 1… to completion, then 2, 2, 2… to completion, then 3, 3, 3…, and so forth.
Excitation for Bridge Measurements	Provided in instruction.	Provided in instruction.	Provided in instruction. ***Measurements per excitation*** must equal ***Repetitions***

CRBasic Programming Highlights	Suggest using **Scan()** / **NextScan** with ten (10) ms scan interval. Program for the use of up to 10 buffers. See CRBasic example *Measuring VoltSE() at 100 Hz*	Use **Scan()** / **NextScan** with a 20 ms or greater scan interval. Program for the use of up to 100 buffers. Also use **SubScan()** / **NextSubScan** with 1600 µs sub-scan and 12 counts. See CRBasic example *Measuring VoltSE() at 200 Hz*	Use **Scan()** / **NextScan** with one (1) second scan interval. Analog input ***Channel*** argument is preceded by a dash (-). See CRBasic example *Measuring VoltSE() at 2000 Hz*

7.9.13.1 Measurements from 1 to 100 Hz

Assuming a minimal CRBasic program, measurement rates between 1 and 100 Hz are determined by the ***Interval*** and ***Units*** parameters in the **Scan()** / **NextScan** instruction pair. The following program executes **VoltSE()** at 1 Hz with a 100% duty cycle.

CRBasic Example 45. Measuring VoltSE() at 1 Hz

```
PipeLineMode'<<<<Pipeline mode ensures precise timing of measurements.

Public FastSE

DataTable(FastSETable,1,-1)
  Sample(1,FastSE(),FP2)
EndTable

BeginProg
  Scan(1,Sec,0,0)'<<<<Measurement rate is determined by Interval and Units
    VoltSe(FastSE(),1,mV2_5,1,False,100, 250,1.0,0)
    CallTable FastSETable
  NextScan
EndProg
```

By modifying the ***Interval***, ***Units***, ***and Buffers*** arguments, **VoltSE()** can be executed at 100 Hz at 100% duty cycle. The following program measures 16 analog-input terminals at 100 Hz.

CRBasic Example 46. Measuring VoltSE() at 100 Hz

```
PipeLineMode'<<<<Pipeline mode ensures precise timing of measurements.

Public FastSE(16)

DataTable(FastSETable,1,-1)
  Sample(16,FastSE(),FP2)
EndTable

BeginProg
  Scan(10,mSec,10,0)'<<<<Measurement rate is determined by Interval, Units, and Buffers
    VoltSe(FastSE(),1,mV2_5,1,False,100, 250,1.0,0)
    CallTable FastSETable
  NextScan
EndProg
```

7.9.13.2 Measurement Rate: 101 to 600 Hz

To measure at rates between 100 and 600 Hz, the **SubScan()** / **NextSubScan** instruction pair is added. Measurements over 100 Hz do not have 100% duty cycle, but are accomplished through measurement bursts. Each burst lasts for some fraction of the scan interval. During the remainder of the scan interval, the CR800 processor catches up on overhead tasks and processes data stored in the buffers. For example, the CR800 can be programmed to measure **VoltSE()** on eight sequential inputs at 200 Hz with a 95% duty cycle as demonstrated in the following example:

CRBasic Example 47. Measuring VoltSE() at 200 Hz

```
PipeLineMode'<<<<Pipeline mode ensures precise timing of measurements.

Public BurstSE(8)

DataTable(BurstSETable,1,-1)
  Sample(8,BurstSE(),FP2)
EndTable

BeginProg
  Scan(1,Sec,10,0)'<<<<Buffers added
    SubScan(5,mSec,190)'<<<<Interval, Units, and Count determine speed and number of measurements
      VoltSe(BurstSE(),8,mV2_5,1,False,100,250,1.0,0)
      CallTable BurstSETable
    NextSubScan
  NextScan
EndProg
```

Many variations of this basic code can be programmed to achieve other burst rates and duty cycles.

The **SubScan()** / **NextSubScan** instruction pair introduce additional complexities. The *SubScan() / NextSubScan Details* (p. 224), introduces some of these. Caution dictates that a specific configuration be thoroughly tested before deployment. Generally, faster rates require measurement of fewer inputs. When testing a program, monitoring the ***SkippedScan*** (p. 603), ***BuffDepth*** (p. 586), and ***MaxBuffDepth*** (p. 595) registers in the CR800 **Status** table may give insight into the use of buffer resources. Bear in mind that when the number of **Scan()** / **NextScan** buffers is exceeded, a skipped scan, and so a missed-data event, will occur.

7.9.13.2.1 Measurements from 101 to 600 Hz 2

- The number of ***Counts*** (loops) of a sub-scan is limited to 65535
- Sub-scans exist only within the **Scan()** / **NextScan** structure with the **Scan()** interval set large enough to allow a sub-scan to run to completion of its counts.
- Sub-scan interval (i) multiplied by the number of sub-scans (n) equals a measure time fraction (MT_1), a part of "measure time", which measure time is represented in the ***MeasureTime*** register in table *Status Table Fields and Descriptions* (p. 577). The **EndScan** instruction occupies an additional 100 µs of measure time, so the interval of the main scan has to be ≥ 100 µs plus measure time outside the **SubScan()** / **EndSubScan** construct, plus the time sub-scans consume.

- Because the task sequencer controls sub-scans, it is not finished until all sub-scans and any following tasks are complete. Therefore, processing does not start until sub-scans are complete and the task sequencer has set the delay for the start of the next main scan. So, one **Scan()** / **NextScan** ***buffer*** holds all the raw measurements inside (and outside) the sub-scan; that is, all the measurements made in a single main scan. For example, one execution of the following code sequence stores 30000 measurements in one buffer:

```
Scan(40,Sec,3,0) 'Scan(interval, units, buffers, count)
  SubScan(2,mSec,10000)
    VoltSe(Measurement(),3,mV5000,1,False,150,250,1.0,0)
    CallTable All4
  NextSubScan
NextScan
```

Note Measure time in the previous code is 300 µs + 19 ms, so a **Scan()** interval less than 20 ms will flag a compile error.

- Sub scans have the advantage of going at a rate faster than 100 Hz. But measurements that can run at an integral 100 Hz have an advantage as follows: since all sub-scans have to complete before the task sequencer can set the delay for the main scan, processing is delayed until this point (20 ms in the above example). So more memory is required for the raw buffer space for the sub-scan mode to run at the same speed as the non-sub-scan mode, and there will be more delay before all the processing is complete for the burst. The pipeline (the raw buffer) has to fill further before processing can start.
- One more way to view sub-scans is that they are a convenient (and only) way to put a loop around a set of measurements. **SubScan() / NextSubScan** specifies a timed loop for so many times around a set of measurements that can be driven by the task sequencer.

7.9.13.3 Measurement Rate: 601 to 2000 Hz

To measure at rates greater than 600 Hz, **VoltSE()** is switched into burst mode by placing a dash (-) before argument in **SEChan** parameter argument and placing alternate arguments in other parameters. Alternate arguments are described in the table *Parameters for Analog Burst Mode* *(p. 226)*. In burst mode, **VoltSE()** dwells on a single channel and measures it at rates up to 2000 Hz, as demonstrated in the CRBasic example Measuring VoltSE() at 2000 Hz. The example program has an 86% duty cycle. That is, it makes measurements over only the leading 86% of the scan. Note that burst mode places all measurements for a given burst in a single variable array and stores the array in a single (but very long!) record in the data table. The exact sampling interval is calculated as,

```
Tsample = 1.085069 * INT((SettleUSEC / 1.085069) + 0.5
```

where ***SettleUSEC*** is the sample interval (µs) entered in the ***SettlingTime*** parameter of the analog input instruction.

CRBasic Example 48. Measuring VoltSE() at 2000 Hz

```
PipeLineMode'<<<<Pipeline mode ensures precise timing of measurements.

Public BurstSE(1735)

DataTable(BurstSETable,1,-1)
  Sample(1735,BurstSE(),FP2)
EndTable

BeginProg
  Scan(1,Sec,10,0)
    'Measurement speed and count are set within VoltSE()
    VoltSe(BurstSE(),1735,mV2_5,-1,False,500,0,1.0,0)
    CallTable BurstSETable
  NextScan
EndProg
```

Many variations of the burst program are possible. Multiple inputs can be measured, but one burst is completed before the next begins. Caution dictates that a specific configuration be thoroughly tested before deployment.

Table 34. Parameters for Analog Burst Mode (601 to 2000 Hz)

CRBasic Analog Voltage Input Parameters	***Description when in Burst Mode***
Destination	A variable array dimensioned to store all measurements from one input. For example, the command, `Dim FastTemp(500)` dimensions array ***FastTemp()*** to store 500 measurements (one second of data at 500 Hz, one-half second of data at 1000 Hz, etc.) The dimension can be any integer from ***1*** to ***65535***.
Repetitions	The number of measurements to make on one input. This number usually equals the number of elements dimensioned in the ***Destination*** array. Valid arguments range from ***1*** to ***65535***.
Voltage Range	The analog input voltage range to be used during measurements. No change from standard measurement mode. Any valid voltage range can be used. However, ranges appended with 'C' cause measurements to be slower than other ranges.
Single-Ended Channel	The single-ended analog input terminal number preceded by a dash (-). Valid arguments range from ***-1*** to -6.
Differential Channel	The differential analog input terminal number preceded by a dash (-). Valid arguments range from ***-1*** to -3.
Measure Offset	No change from standard measurement mode. ***False*** allows for faster measurements.
Measurements per Excitation	Must equal the value entered in ***Repetitions***
Reverse Ex	No change from standard measurement mode. For fastest rate, set to ***False.***
Rev Diff	No change from standard measurement mode. For fastest rate, set to ***False.***

Table 34. Parameters for Analog Burst Mode (601 to 2000 Hz)	
CRBasic Analog Voltage Input Parameters	***Description when in Burst Mode***
Settling Time	Sample interval in µs. This argument determines the measurement rate. 500 µs interval = 2000 Hz rate 750 µs interval = 1333.33 Hz rate
Integ	Ignored if set to an integer. ***_50Hz*** and ***_60Hz*** are valid for AC rejection but are seldom used in burst applications.
Multiplier	No change from standard measurement mode. Enter the proper multiplier. This is the slope of the linear equation that equates output voltage to the measured phenomena. Any number greater or less than ***0*** is valid.
Offset	No change from standard measurement mode. Enter the proper offset. This is the Y intercept of the linear equation that equates output voltage to the measured phenomena.

7.9.14 Measurement: PRT

PRTs (platinum resistance thermometers) are high-accuracy resistive devices used in measuring temperature.

7.9.14.1 Measuring PT100s (100 Ω PRTs)

PT100s (100 Ω PRTs) are readily available. The CR800 can measure PT100s in several configurations, each with its own advantages.

7.9.14.1.1 Self-Heating and Resolution

PRT measurements present a dichotomy. Excitation voltage should be maximized to maximize the measurement resolution. Conversely, excitation voltage should be minimized to minimize self-heating of the PRT.

If the voltage drop across the PRT is ≤ 25 mV, self-heating should be less than 0.001°C in still air. To maximize measurement resolution, optimize the excitation voltage (Vx) such that the voltage drop spans, but does not exceed, the voltage input range.

7.9.14.1.2 PRT Calculation Standards

Two CRBasic instructions are available to facilitate PRT measurements.

PRT() — an obsolete instruction. It calculates temperature from RTD resistance using DIN standard 43760. It is superseded in probably all cases by **PRTCalc()**.

PRTCalc() — calculates temperature from RTD resistance according to one of several supported standards. **PRTCalc()** supersedes **PRT()** in probably all cases.

For industrial grade RTDs, the relationship between temperature and resistance is characterized by the Callendar-Van Dusen (CVD) equation. Coefficients for different sensor types are given in published standards or by the manufacturers for

non-standard types. Measured temperatures are compared against the ITS-90 scale, a temperature instrumentation-calibration standard.

PRTCalc() follows the principles and equations given in the US ASTM E1137-04 standard for conversion of resistance to temperature. For temperature range 0 to 650 °C, a direct solution to the CVD equation results in errors < ±0.0005 °C (caused by rounding errors in CR800 math). For the range of –200 to 0 °C, a fourth-order polynomial is used to convert resistance to temperature resulting in errors of < ±0.003 °C.

These errors are only the errors in approximating the relationships between temperature and resistance given in the relevant standards. The CVD equations and the tables published from them are only an approximation to the true linearity of an RTD, but are deemed adequate for industrial use. Errors in that approximation can be several hundredths of a degree Celsius at different points in the temperature range and vary from sensor to sensor. In addition, individual sensors have errors relative to the standard, which can be up to ±0.3 °C at 0 °C with increasing errors away from 0 °C, depending on the grade of sensor. Highest accuracy is usually achieved by calibrating individual sensors over the range of use and applying corrections to the R_S/R_O value input to the **PRTCalc()** instruction (by using the calibrated value of R_O) and the multiplier and offset parameters.

Refer to *CRBasic Editor Help* for specific **PRTCalc()** parameter entries. The following information is presented as detail beyond what is available in *CRBasic Editor Help*.

The general form of the Callendar-Van Dusen (CVD) equation is shown in the following equations.

When $R/R_0 < 1$ ($K = R/R_0 – 1$):

```
T = g * K^4 + h * K^3 + I * K^2 + j * K
```

When $R/R_0 >= 1$:

```
T = (SQRT(d * (R/R0) + e) -a) / f
```

Depending on the code entered for parameter ***Type***, which specifies the platinum-resistance sensor type, coefficients are assigned values according to the following tables.

Note Coefficients are rounded to the seventh significant digit to match the CR800 math resolution.

Alpha is defined as:

$$\alpha = (R_{100} – R_0) / (100 \bullet R_0)$$

$$\alpha = (R_{100} / R_0 – 1) / 100$$

where R_{100} and R_0 are the resistances of the PRT at 100 °C and 0 °C, respectively.

Table 35. PRTCalc() Type-Code-1 Sensor	
IEC 60751:2008 (IEC 751), alpha = 0.00385. Now internationally adopted and written into standards ASTM E1137-04, JIS 1604:1997, EN 60751 and others. This type code is also used with probes compliant with older standards DIN43760, BS1904, and others. (Reference: IEC 60751. ASTM E1137)	
Constant	***Coefficient***
a	3.9083000E-03
d	-2.3100000E-06
e	1.7584810E-05
f	-1.1550000E-06
g	1.7909000E+00
h	-2.9236300E+00
i	9.1455000E+00
j	2.5581900E+02

Table 36. PRTCalc() Type-Code-2 Sensor	
US Industrial Standard, alpha = 0.00392 (Reference: Logan Enterprises)	
Constant	***Coefficient***
a	3.9786300E-03
d	-2.3452400E-06
e	1.8174740E-05
f	-1.1726200E-06
g	1.7043690E+00
h	-2.7795010E+00
i	8.8078440E+00
j	2.5129740E+02

Table 37. PRTCalc() Type-Code-3 Sensor	
US Industrial Standard, alpha = 0.00391 (Reference: OMIL R84 (2003))	
Constant	***Coefficient***
a	3.9690000E-03
d	-2.3364000E-06
e	1.8089360E-05
f	-1.1682000E-06
g	1.7010560E+00
h	-2.6953500E+00

Table 37. PRTCalc() Type-Code-3 Sensor	
US Industrial Standard, alpha = 0.00391 (Reference: OMIL R84 (2003))	
Constant	***Coefficient***
i	8.8564290E+00
j	2.5190880E+02

Table 38. PRTCalc() Type-Code-4 Sensor	
Old Japanese Standard, alpha = 0.003916 (Reference: JIS C 1604:1981, National Instruments)	
Constant	***Coefficient***
a	3.9739000E-03
d	-2.3480000E-06
e	1.8139880E-05
f	-1.1740000E-06
g	1.7297410E+00
h	-2.8905090E+00
i	8.8326690E+00
j	2.5159480E+02

Table 39. PRTCalc() Type-Code-5 Sensor	
Honeywell Industrial Sensors, alpha = 0.00375 (Reference: Honeywell)	
Constant	Coefficient
a	3.8100000E-03
d	-2.4080000E-06
e	1.6924100E-05
f	-1.2040000E-06
g	2.1790930E+00
h	-5.4315860E+00
i	9.9196550E+00
j	2.6238290E+02

Table 40. PRTCalc() Type-Code-6 Sensor	
Standard ITS-90 SPRT, alpha = 0.003926 (Reference: Minco / Instrunet)	
Constant	***Coefficient***
a	3.9848000E-03
d	-2.3480000E-06
e	1.8226630E-05
f	-1.1740000E-06
g	1.6319630E+00
h	-2.4709290E+00
i	8.8283240E+00
j	2.5091300E+02

7.9.14.2 PT100 in Four-Wire Half-Bridge

Example shows:

- How to measure a PRT in a four-wire half-bridge configuration
- How to compensate for long leads

Advantages:

- High accuracy with long leads

Example PRT specifications:

- Alpha = 0.00385 (PRT Type 1)

A four-wire half-bridge, measured with **BrHalf4W()**, is the best configuration for accuracy in cases where the PRT is separated from bridge resistors by a lead length having more than a few thousandths of an ohm resistance. In this example, the measurement range is –10° to 40 °C. The length of the cable from the CR800 and the bridge resistors to the PRT is 500 feet.

Figure *PT100 in Four-Wire Half-Bridge* (p. 233) shows the circuit used to measure a 100 Ω PRT. The 10 kΩ resistor allows the use of a high excitation voltage and a low input range. This ensures that noise in the excitation does not have an effect on signal noise. Because the fixed resistor (R_f) and the PRT (R_S) have approximately the same resistance, the differential measurement of the voltage drop across the PRT can be made on the same range as the differential measurement of the voltage drop across R_f. The use of the same range eliminates range translation errors that can arise from the 0.01% tolerance of the range translation resistors internal to the CR800.

7.9.14.2.1 Calculating the Excitation Voltage

The voltage drop across the PRT is equal to V_X multiplied by the ratio of R_S to the total resistance, and is greatest when R_S is greatest (R_S = 115.54 Ω at 40 °C). To find the maximum excitation voltage that can be used on the ±25 mV input range, assume V_2 is equal to 25 mV and use Ohm's Law to solve for the resulting current, I.

$I = 25\ mV/R_S = 25\ mV/115.54\ ohms = 0.216\ mA$

Next solve for V_X:

$V_X = I*(R_1 + R_S + R_f) = 2.21\ V$

If the actual resistances were the nominal values, the CR800 would not over range with $V_X = 2.2$ V. However, to allow for the tolerance in actual resistors, set V_X equal to 2.1 V (e.g., if the 10 kΩ resistor is 5% low, i.e., $R_S/(R_1+R_S+R_f)=115.54 / 9715.54$, and V_X must be 2.102 V to keep V_S less than 25 mV).

7.9.14.2.2 Calculating the BrHalf4W() Multiplier

The result of **BrHalf4W()** is equivalent to R_S/R_f.

$X = R_S/R_f$

PRTCalc() computes the temperature (°C) for a DIN 43760 standard PRT from the ratio of the PRT resistance to its resistance at 0 °C (R_S/R_0). Thus, a multiplier of R_f/R_0 is used in **BrHalf4W()** to obtain the desired intermediate, R_S/R_0 ($=R_S/R_f \cdot R_f/R_0$). If R_S and R_0 were each exactly 100 Ω, the multiplier would be 1. However, neither resistance is likely to be exact. The correct multiplier is found by connecting the PRT to the CR800 and entering **BrHalf4W()** with a multiplier of 1. The PRT is then placed in an ice bath (0 °C), and the result of the bridge measurement is read. The reading is R_S/R_f, which is equal to R_0/R_f since $R_S=R_0$ at 0 °C. The correct value of the multiplier, R_f/R_0, is the reciprocal of this reading. The initial reading assumed for this example was 0.9890. The correct multiplier is: $R_f/R_0 = 1/0.9890 = 1.0111$.

7.9.14.2.3 Choosing Rf

The fixed 100 Ω resistor must be thermally stable. Its precision is not important because the exact resistance is incorporated, along with that of the PRT, into the calibrated multiplier. The 10 ppm/°C temperature coefficient of the fixed resistor will limit the error due to its change in resistance with temperature to less than 0.15 °C over the –10° to 40 °C temperature range. Because the measurement is ratiometric (R_S/R_f), the properties of the 10 kΩ resistor do not affect the result.

A terminal-input module (TIM) can be used to complete the circuit shown in figure *PT100 in Four-Wire Half-Bridge* (p. 233). Refer to the appendix *Signal Conditioners* (p. 623) for information concerning available TIM modules.

Figure 63. PT100 in Four-Wire Half-Bridge

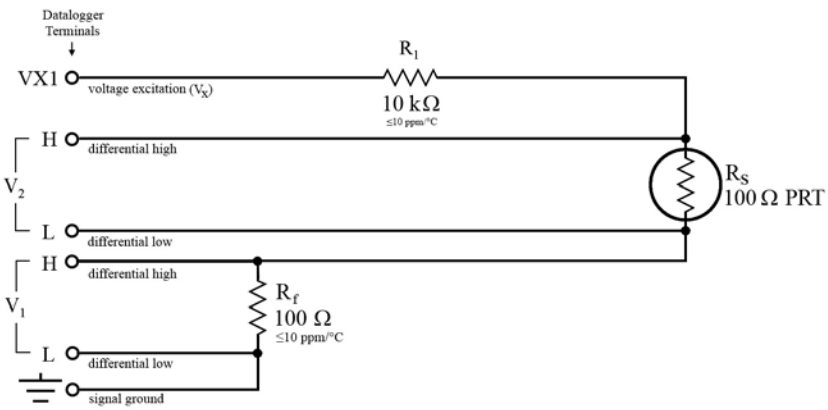

CRBasic Example 49. PT100 in Four-Wire Half-Bridge

```
'This program example demonstrates the measurement of a 100-ohm PRT using a four-wire half
'bridge.  See FIGURE. PT100 in Four-Wire Half-Bridge (p. 233) for the wiring diagram

Public Rs_Ro
Public Deg_C

BeginProg
  Scan(1,Sec,0,0)

    'BrHalf4W(Dest,Reps,Range1,Range2,DiffChan1,ExChan,MPS,Ex_mV,RevEx,RevDiff,
    '  Settling, Integration,Mult,Offset)
    BrHalf4W(Rs_Ro,1,mV25,mV25,1,Vx1,1,2200,True,True,0,250,1.0111,0)

    'PRTCalc(Destination,Reps,Source,PRTType,Mult,Offset)
    PRTCalc(Deg_C,1,Rs_Ro,1,1.0,0) 'PRTType sets alpha

  NextScan
EndProg
```

7.9.14.3 PT100 in Three-Wire Half Bridge

Example shows:

- How to measure a PRT in a three-wire half-bridge configuration.

Advantages:

- Uses half as many terminals configured for analog input as four-wire half-bridge.

Disadvantages:

- May not be as accurate as four-wire half-bridge.

Example PRT specifications:

- Alpha = 0.00385 (PRTType 1)

The temperature measurement requirements in this example are the same as in *PT100 in Four-Wire Half-Bridge* (p. 231). In this case, a three-wire half-bridge and CRBasic instruction **BRHalf3W()** are used to measure the resistance of the PRT. The diagram of the PRT circuit is shown in figure *PT100 in Three-Wire Half-Bridge* (p. 235).

As in section *PT100 in Four-Wire Half-Bridge* (p. 231), the excitation voltage is calculated to be the maximum possible, yet allows the measurement to be made on the ±25 mV input range. The 10 kΩ resistor has a tolerance of ±1%; thus, the lowest resistance to expect from it is 9.9 kΩ. Solve for V_X (the maximum excitation voltage) to keep the voltage drop across the PRT less than 25 mV:

$$0.025\ V > (V_X * 115.54)/(9900+115.54)$$

$$V_X < 2.16\ V$$

The excitation voltage used is 2.2 V.

The multiplier used in **BRHalf3W()** is determined in the same manner as in *PT100 in Four-Wire Half-Bridge* (p. 231). In this example, the multiplier (R_f/R_0) is assumed to be 100.93.

The three-wire half-bridge compensates for lead wire resistance by assuming that the resistance of wire A is the same as the resistance of wire B. The maximum difference expected in wire resistance is 2%, but is more likely to be on the order of 1%. The resistance of R_S calculated with **BRHalf3W()** is actually R_S plus the difference in resistance of wires A and B. The average resistance of 22 AWG wire is 16.5 ohms per 1000 feet, which would give each 500 foot lead wire a nominal resistance of 8.3 ohms. Two percent of 8.3 ohms is 0.17 ohms. Assuming that the greater resistance is in wire B, the resistance measured for the PRT (R_0 = 100 ohms) in the ice bath would be 100.17 ohms, and the resistance at 40°C would be 115.71. The measured ratio R_S/R_0 is 1.1551; the actual ratio is 115.54/100 = 1.1554. The temperature computed by **PRTCalc()** from the measured ratio will be about 0.1°C lower than the actual temperature of the PRT. This source of error does not exist in the example in *PT100 in Four-Wire Half-Bridge* (p. 231) because a four-wire half-bridge is used to measure PRT resistance.

A terminal input module can be used to complete the circuit in figure *PT100 in Three-Wire Half-Bridge* (p. 235). Refer to the appendix *Signal Conditioners* (p. 623) for information concerning available TIM modules.

Figure 64. PT100 in Three-Wire Half-Bridge

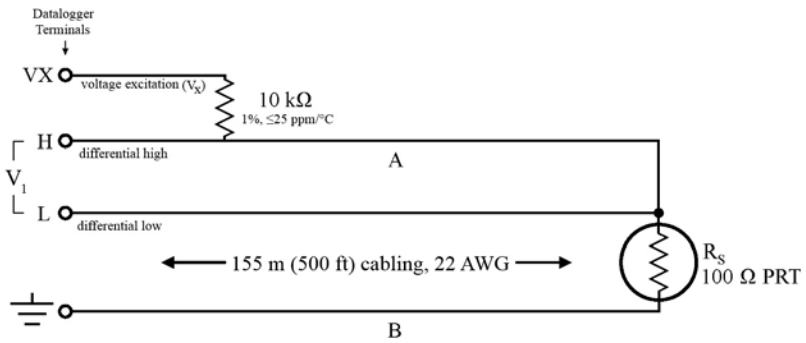

CRBasic Example 50. PT100 in Three-wire Half-bridge

```
'This program example demonstrates the measurement of a 100-ohm PRT using a three-wire half
'bridge.  See FIGURE. PT100 in Three-Wire Half-Bridge (p. 235) for wiring diagram.

Public Rs_Ro
Public Deg_C

BeginProg
  Scan(1,Sec,0,0)

    'BrHalf3W(Dest,Reps,Range1,SEChan,ExChan,MPE,Ex_mV,True,0,250,100.93,0)
    BrHalf3W(Rs_Ro,1,mV25,1,Vx1,1,2200,True,0,250,100.93,0)

    'PRTCalc(Destination,Reps,Source,PRTType,Mult,Offset)
    PRTCalc(Deg_C,1,Rs_Ro,1,1.0,0)

  NextScan
EndProg
```

7.9.14.4 PT100 in Four-Wire Full-Bridge

Example shows:

- How to measure a PRT in a four-wire full-bridge

Advantages:

- Uses half as many terminals configured for analog input as four-wire half-bridge.

Example PRT Specifications:

- α = 0.00392 (PRTType 2)

This example measures a 100 ohm PRT in a four-wire full-bridge, as shown in figure *PT100 in Four-Wire Full-Bridge* (p. 237), using CRBasic instruction **BRFull()**. In this example, the PRT is in a constant-temperature bath and the measurement is to be used as the input for a control algorithm.

As described in table *Resistive-Bridge Circuits with Voltage Excitation* (p. 320), the result of **BRFull()** is X,

$$X = 1000\ V_S/V_X$$

where,

V_S = measured bridge-output voltage

V_X = excitation voltage

or,

$$X = 1000\ (R_S/(R_S+R_1) - R_3/(R_2+R_3)).$$

With reference to figure *PT100 in Four-Wire Full-Bridge* (p. 237), the resistance of the PRT (R_S) is calculated as:

$$R_S = R_1 \cdot X' / (1-X')$$

where

$$X' = X / 1000 + R_3/(R_2+R_3)$$

Thus, to obtain the value R_S/R_0, ($R_0 = R_S$ @ 0 °C) for the temperature calculating instruction **PRTCalc()**, the multiplier and offset used in **BRFull()** are 0.001 and $R_3/(R_2+R_3)$, respectively. The multiplier (R_f) used in the bridge transform algorithm ($X = R_f\ (X/(X-1))$ to obtain R_S/R_0 is R_1/R_0 or (5000/100 = 50).

The application requires control of the temperature bath at 50 °C with as little variation as possible. High resolution is desired so the control algorithm will respond to very small changes in temperature. The highest resolution is obtained when the temperature range results in a signal (V_S) range that fills the measurement range selected in **BRFull()**. The full-bridge configuration allows the bridge to be balanced (V_S = 0 V) at or near the control temperature. Thus, the output voltage can go both positive and negative as the bath temperature changes, allowing the full use of the measurement range.

The resistance of the PRT is approximately 119.7 Ω at 50 °C. The 120 Ω fixed resistor balances the bridge at approximately 51 °C. The output voltage is:

$$V_S = V_X \cdot [R_S/(R_S+R_1) - R_3/(R_2+R_3)]$$
$$= V_X \cdot [R_S/(R_S+5000) - 0.023438]$$

The temperature range to be covered is 50 °C ±10 °C. At 40 °C, R_S is approximately 115.8 Ω, or:

$$V_S = -802.24E-6\ V_X.$$

Even with an excitation voltage (V_X) equal to 2500 mV, V_S can be measured on the ±2_5 mV scale (40 °C / 115.8 Ω / –2.006 mV, 60 °C / 123.6 Ω / 1.714 mV). There is a change of approximately 2 mV from the output at 40°C to the output at 51 °C, or 181 µV / °C. With a resolution of 0.33 µV on the ±2_5 mV range, this means that the temperature resolution is 0.0009 °C.

The ±5 ppm per °C temperature coefficient of the fixed resistors was chosen because the ±0.01% accuracy tolerance would hold over the desired temperature range.

Figure 65. PT100 in Four-Wire Full-Bridge

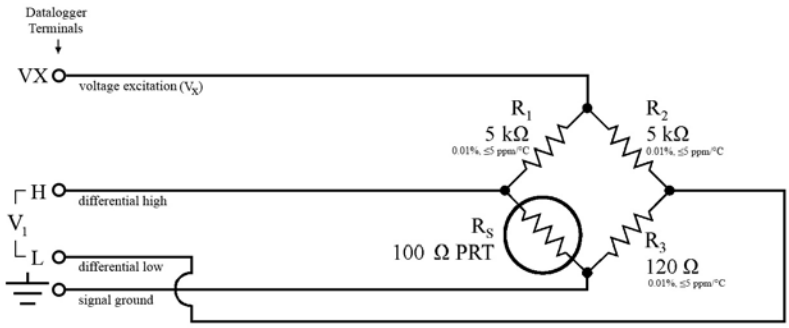

CRBasic Example 51. PT100 in Four-Wire Full-Bridge

```
'This program example demonstrates the measurement of a 100-ohm four-wire full bridge. See
'FIGURE. PT100 in Four-Wire Full-Bridge (p. 237) for wiring diagram.

Public BrFullOut
Public Rs_Ro
Public Deg_C

BeginProg
  Scan(1,Sec,0,0)

    'BrFull(Dst,Reps,Range,DfChan,Vx1,MPS,Ex,RevEx,RevDf,Settle,Integ,Mult,Offset)
    BrFull(BrFullOut,1,mV25,1,Vx1,1,2500,True,True,0,250,.001,.02344)

    'BrTrans = Rf*(X/(1-X))
    Rs_Ro = 50 * (BrFullOut/(1 - BrFullOut))

    'PRTCalc(Destination,Reps,Source,PRTType,Mult,Offset)
    PRTCalc(Deg_C,1,Rs_Ro,2,1.0,0)

  NextScan
EndProg
```

7.9.15 PLC Control — Details

Related Topics:
- *PLC Control — Overview* (p. 74)
- *PLC Control — Details* (p. 237)
- *PLC Control Modules — Overview* (p. 349)
- *PLC Control Modules — Lists* (p. 624)
- *PLC Control — Instructions* (p. 536)
- Switched Voltage Output — Specifications
- *Switched Voltage Output — Overview* (p. 78)
- *Switched Voltage Output — Details* (p. 101)

This section is slated for expansion. Below are a few tips.

- Short Cut programming wizard has provisions for simple on/off control.
- PID control can be done with the CR800. Ask a Campbell Scientific application engineer for more information.

- When controlling a PID algorithm, a delay between processing (algorithm input) and the control (algorithm output) is not usually desirable. A delay will not occur in either *sequential mode* (p. 501) or *pipeline mode* (p. 497), assuming an appropriately fast scan interval is programmed, and the program is not skipping scans. In sequential mode, if some task occurs that pushes processing time outside the scan interval, skipped scans will occur and the PID control may fail. In pipeline mode, with an appropriately sized scan buffer, no skipped scans will occur. However, the PID control may fail as the processing instructions work through the scan buffer.
- To avoid these potential problems, bracket the processing instructions in the CRBasic program with **ProcHiPri** and **EndProcHiPri**. Processing instructions between these instructions are given the same high priority as measurement instructions and do not slip into the scan buffer if processing time is increased. ProcHiPri and EndProcHiPri may not be selectable in *CRBasic Editor*. You can type them in anyway, and the compiler will recognize them.

7.9.16 Serial I/O: Capturing Serial Data

The CR800 communicates with smart sensors that deliver measurement data through serial data protocols.

Read More See *Telecommunications and Data Retrieval* (p. 370) for background on CR800 serial communications.

7.9.16.1 Introduction

Serial denotes transmission of bits (1s and 0s) sequentially, or "serially." A byte is a packet of sequential bits. RS-232 and TTL standards use bytes containing eight bits each. Consider an instrument that transmits the byte "11001010" to the CR800. The instrument does this by translating "11001010" into a series of higher and lower voltages, which it transmits to the CR800. The CR800 receives and reconstructs these voltage levels as "11001010." Because an RS-232 or TTL standard is adhered to by both the instrument and the CR800, the byte successfully passes between them.

If the byte is displayed on a terminal as it was received, it will appear as an ASCII / ANSI character or control code. Table *ASCII / ANSI Equivalents* (p. 238) shows a sample of ASCII / ANSI character and code equivalents.

Table 41. ASCII / ANSI Equivalents

Byte Received	*ASCII Character Displayed*	*Decimal ASCII Code*	*Hex ASCII Code*
00110010	2	50	32
1100010	b	98	62
00101011	+	43	2b
00001101	cr	13	d
00000001	☺	1	1

Read More See the appendix *ASCII / ANSI Table* (p. 613) for a complete list of ASCII / ANSI codes and their binary and hex equivalents.

The face value of the byte, however, is not what is usually of interest. The manufacturer of the instrument must specify what information in the byte is of interest. For instance, two bytes may be received, one for character 2, the other for character b. The pair of characters together, "2b", is the hexadecimal code for "+", "+" being the information of interest. Or, perhaps, the leading bit, the MSB (Most Significant Bit), on each of two bytes is dropped, the remaining bits combined, and the resulting "super byte" translated from the remaining bits into a decimal value. The variety of protocols is limited only by the number of instruments on the market. For one in-depth example of how bits may be translated into usable information, see the appendix *FP2 Data Format* (p. 617).

Note ASCII / ANSI control character ff-form feed (binary 00001100) causes a terminal screen to clear. This can be frustrating for a developer who prefers to see information on a screen, rather than a blank screen. Some third party terminal emulator programs, such as *Procomm*, are useful tools in serial I/O development since they handle this and other idiosyncrasies of serial communication.

When a standardized serial protocol is supported by the CR800, such as PakBus® or Modbus, translation of bytes is relatively easy and transparent. However, when bytes require specialized translation, specialized code is required in the CRBasic program, and development time can extend into several hours or days.

7.9.16.2 I/O Ports

The CR800 supports two-way serial communication with other instruments through ports listed in table *CR800 Serial Ports* (p. 239). A serial device will often be supplied with a nine-pin D-type connector serial port. Check the manufacture's pinout for specific information. In many cases, the standard nine-pin RS-232 scheme is used. If that is the case then,

Connect sensor RX (receive, pin 2) to a U or C terminal configured for **Tx** (C1, C3).

- Connect sensor TX (transmit, pin 3) to a U or C terminal configured for **Rx** (C2, C4)
- Connect sensor ground (pin 5) to datalogger ground (**G** terminal)

Note Rx and Tx lines on nine-pin connectors are sometimes switched by the manufacturer.

Table 42. CR800 Serial Ports

Serial Port	*Voltage Level*	*Logic*
RS-232 (9 pin)	RS-232	Full-duplex asynchronous RS-232
CS I/O (9 pin)	TTL	Full-duplex asynchronous RS-232
COM1 (C1 – C2)	TTL	Full-duplex asynchronous RS-232/TTL
COM2 (C3 – C4)	TTL	Full-duplex asynchronous RS-232/TTL
C1	5 VDC	SDI-12

Table 42. CR800 Serial Ports		
Serial Port	***Voltage Level***	***Logic***
C3	5 VDC	SDI-12
C1, C2, C3	5 VDC	SDM (used with Campbell Scientific peripherals only)

7.9.16.3 Protocols

PakBus is the protocol native to the CR800 and transparently handles routine point-to-point and network communications among PCs and Campbell Scientific dataloggers. Modbus and DNP3 are industry-standard networking SCADA protocols that optionally operate in the CR800 with minimal user configuration. PakBus®, Modbus, and DNP3 operate on the **RS-232**, **CS I/O**, and four COM ports. SDI-12 is a protocol used by some smart sensors that requires minimal configuration on the CR800.

Read More See *SDI-12 Recording* (p. 344), *SDI-12 Sensor Support* (p. 259), *PakBus Overview* (p. 372), *DNP3* (p. 387), and *Modbus* (p. 391).

Many instruments require non-standard protocols to communicate with the CR800.

Note If an instrument or sensor optionally supports SDI-12, Modbus, or DNP3, consider using these protocols before programming a custom protocol. These higher-level protocols are standardized among many manufacturers and are easy to use, relative to a custom protocol. SDI-12, Modbus, and DNP3 also support addressing systems that allow multiplexing of several sensors on a single communication port, which makes for more efficient use of resources.

7.9.16.4 Glossary of Serial I/O Terms

Term. asynchronous

The transmission of data between a transmitting and a receiving device occurs as a series of zeros and ones. For the data to be "read" correctly, the receiving device must begin reading at the proper point in the series. In asynchronous communication, this coordination is accomplished by having each character surrounded by one or more start and stop bits which designate the beginning and ending points of the information (see *synchronous* (p. 504)).

Indicates the sending and receiving devices are not synchronized using a clock signal.

Term. baud rate

The rate at which data are transmitted.

Term. big endian

"Big end first." Placing the most significant integer at the beginning of a numeric word, reading left to right. The processor in the CR800 is MSB, or puts the most significant integer first. See the appendix *Endianness* (p. 619).

Term. cr

Carriage return

Term. data bits

Number of bits used to describe the data, and fit between the start and stop bits. Sensors typically use 7 or 8 data bits.

Term. duplex

A serial communication protocol. Serial communications can be simplex, half-duplex, or full-duplex.

Reading list: *simplex* *(p. 501),* *duplex* *(p. 241),* *half-duplex* *(p. 490),* and *full-duplex* *(p. 490).*

Term. lf

Line **f**eed. Often associated with carriage return (<cr>). **<cr><lf>**.

Term. little endian

"Little end first." Placing the most significant integer at the end of a numeric word, reading left to right. The processor in the CR800 is MSB, or puts the most significant integer first. See the appendix *Endianness* *(p. 619).*

Term. LSB

Least significant bit (the trailing bit). See the appendix *Endianness* *(p. 619).*

Term. marks and spaces

RS-232 signal levels are inverted logic compared to TTL. The different levels are called marks and spaces. When referenced to signal ground, the valid RS-232 voltage level for a mark is –3 to –25, and for a space is +3 to +25 with –3 to + 3 defined as the transition range that contains no information. A mark is a logic 1 and negative voltage. A space is a logic 0 and positive voltage.

Term. MSB

Most **s**ignificant **b**it (the leading bit). See the appendix *Endianness* *(p. 619).*

Term. RS-232C

Refers to the standard used to define the hardware signals and voltage levels. The CR800 supports several options of serial logic and voltage levels including RS-232 logic at TTL levels and TTL logic at TTL levels.

Term. RX

Receive

Term. SP

Space

Term. start bit

Is the bit used to indicate the beginning of data.

Term. stop bit

Is the end of the data bits. The stop bit can be 1, 1.5 or 2.

Term. TX

Transmit

7.9.16.5 Serial I/O CRBasic Programming

To transmit or receive RS-232 or TTL signals, a serial port (see table *CR800 Serial Ports* (p. 239)) must be opened and configured through CRBasic with the **SerialOpen()** instruction. The **SerialClose()** instruction can be used to close the serial port. Below is practical advice regarding the use of **SerialOpen()** and **SerialClose()**. Program CRBasic example *Receiving an RS-232 String* (p. 247) shows the use of **SerialOpen()**. Consult *CRBasic Editor Help* for more information.

```
SerialOpen(COMPort,BaudRate,Format,TXDelay,BufferSize)
```

- **COMPort** — Refer to *CRBasic Editor Help* for a complete list of COM ports available for use by **SerialOpen()**.
- **BaudRate** — Baud rate mismatch is frequently a problem when developing a new application. Check for matching baud rates. Some developers prefer to use a fixed baud rate during initial development. When set to **-nnnn** (where nnnn is the baud rate) or **0**, auto baud-rate detect is enabled. Autobaud is useful when using the CS I/O and RS-232 ports since it allows ports to be simultaneously used for sensor and PC telecommunications.
- **Format** — Determines data type and if PakBus® communications can occur on the COM port. If the port is expected to read sensor data and support normal PakBus® telemetry operations, use an auto-baud rate argument (**0** or **-nnnn**) and ensure this option supports PakBus® in the specific application.
- **BufferSize** — The buffer holds received data until it is removed. **SerialIn()**, **SerialInRecord()**, and **SerialInBlock()** instructions are used to read data from the buffer to variables. Once data are in variables, string manipulation instructions are used to format and parse the data.

SerialClose() must be executed before **SerialOpen()** can be used again to reconfigure the same serial port, or before the port can be used to communicate with a PC.

7.9.16.5.1 Serial I/O Programming Basics

SerialOpen()[1]

- Closes PPP (if active)
- Returns TRUE or FALSE when set equal to a Boolean variable
- Be aware of buffer size (ring memory)

SerialClose()

- Examples of when to close
  - Reopen PPP
  - Finished setting new settings in a Hayes modem
  - Finished dialing a modem
- Returns TRUE or FALSE when set equal to a Boolean variable

SerialFlush()

- Puts the read and write pointers back to the beginning
- Returns TRUE or FALSE when set equal to a Boolean variable

SerialIn()[1]

- Can wait on the string until it comes in
- Timeout is renewed after each character is received
- **SerialInRecord()** tends to obsolete **SerialIn()**.
- Buffer-size margin (one extra record + one byte)

SerialInBlock()[1]

- For binary data (perhaps integers, floats, data with NULL characters).
- Destination can be of any type.
- Buffer-size margin (one extra record + one byte).

SerialOutBlock()[1,3]

- Binary
- Can run in pipeline mode inside the digital measurement task (along with SDM instructions) if the **COMPort** parameter is set to a constant such as **COM1** or **COM2**, and the number of bytes is also entered as a constant.

SerialOut()

- Use for ASCII commands and a known response, such as Hayes-modem commands.
- If open, returns the number of bytes sent. If not open, returns 0.

SerialInRecord()[2]

- Can run in pipeline mode inside the digital measurement task (along with SDM instructions) if the **COMPort** parameter is set to a constant argument such as **COM1** or **COM2**, and the number of bytes is also entered as a constant.
- Simplifies synchronization with one way.
- Simplifies working with protocols that send a "record" of data with known start and/or end characters, or a fixed number of records in response to a poll command.
- If a start and end word is not present, then a time gap is the only remaining separator of records. Using **COM1** or **COM2** coincidentally detects a time gap of >100 bits if the records are less than 256 bytes.
- Buffer size margin (one extra record + one byte).

[1] Processing instructions

[2] Measurement instruction in the pipeline mode

[3] Measurement instruction if expression evaluates to a constant

7.9.16.5.2 Serial I/O Input Programming Basics

Applications with the purpose of receiving data from another device usually include the following procedures. Other procedures may be required depending on the application.

1. Know what the sensor supports and exactly what the data are. Most sensors work well with TTL voltage levels and RS-232 logic. Some things to consider:
   - Become thoroughly familiar with the data to be captured.
   - Can the sensor be polled?
   - Does the sensor send data on its own schedule?
   - Are there markers at the beginning or end of data? Markers are very useful for identifying a variable length record.
   - Does the record have a delimiter character such as a comma, space, or tab? Delimiters are useful for parsing the received serial string into usable numbers.
   - Will the sensor be sending multiple data strings? Multiple strings usually require filtering before parsing.
   - How fast will data be sent to the CR800?
   - Is power consumption critical?
   - Does the sensor compute a checksum? Which type? A checksum is useful to test for data corruption.
2. Open a serial port with **SerialOpen()**.
   - Example:
     ```
     SerialOpen(Com1,9600,0,0,10000)
     ```
   - Designate the correct port in CRBasic.
   - Correctly wire the device to the CR800.
   - Match the port baud rate to the baud rate of the device in CRBasic (use a fixed baud rate — rather than autobaud — when possible).
3. Receive serial data as a string with **SerialIn()** or **SerialInRecord()**.
   - Example:
     ```
     SerialInRecord(Com2,SerialInString,42,0,35,"",01)
     ```
   - Declare the string variable large enough to accept the string.
     - Example:
       ```
       Public SerialInString As String * 25
       ```
   - Observe the input string in the input string variable in a *numeric monitor* *(p. 495)*.

Note **SerialIn()** and **SerialInRecord()** both receive data. **SerialInRecord()** is best for receiving streaming data. **SerialIn()** is best for receiving discrete blocks.

4. Parse (split up) the serial string using **SplitStr()**
   - Separates string into numeric and / or string variables.

- Example:
  ```
  SplitStr(InStringSplit,SerialInString,"",2,0)
  ```
- Declare an array to accept the parsed data.
  - Example:
    ```
    Public InStringSplit(2) As String
    ```
  - Example:
    ```
    Public SplitResult(2) As Float
    ```

7.9.16.5.3 Serial I/O Output Programming Basics

Applications with the purpose of transmitting data to another device usually include the following procedures. Other procedures may be required depending on the application.

1. Open a serial port with **SerialOpen()** to configure it for communications.
   - Parameters are set according to the requirements of the communication link and the serial device.
   - Example:
     ```
     SerialOpen(Com1,9600,0,0,10000)
     ```
   - Designate the correct port in CRBasic.
   - Correctly wire the device to the CR800.
   - Match the port baud rate to the baud rate of the device in CRBasic.
   - Use a fixed baud rate (rather than auto baud) when possible.
2. Build the output string.
   - Example:
     ```
     SerialOutString = "*" & "27.435" & "," & "56.789" & "#"
     ```
   - Tip — concatenate (add) strings together using & instead of +.
   - Tip — use **CHR()** instruction to insert ASCII / ANSI characters into a string.
3. Output string via the serial port (**SerialOut()** or **SerialOutBlock()** command).
   - Example:
     ```
     SerialOut(Com1,SerialOutString,"",0,100)
     ```
   - Declare the output string variable large enough to hold the entire concatenation.
   - Example:
     ```
     Public SerialOutString As String * 100
     ```

- **SerialOut()** and **SerialOutBlock()** output the same data, except that **SerialOutBlock()** transmits null values while **SerialOut()** strings are terminated by a null value.

7.9.16.5.4 Serial I/O Translating Bytes

One or more of three principle data formats may end up in the ***SerialInString()*** variable (see examples in *Serial Input Programming Basics* *(p. 244)*). Data may be combinations or variations of these. The instrument manufacturer must provide the rules for decoding the data

- **Alpha-numeric** — Each digit represents an alpha-numeric value. For example, R = the letter R, and 2 = decimal 2. This is the easiest protocol to translate since the encode and translation are identical. Normally, the CR800 is programmed to parse (split) the string and place values in variables.

Example string from humidity, temperature, and pressure sensor:

```
SerialInString = "RH= 60.5 %RH T= 23.7 ˚C Tdf= 15.6 ˚C Td=
15.6 ˚C a= 13.0 g/m3   x=   11.1  g/kg    Tw= 18.5  ˚C H2O=
17889 ppmV  pw=17.81 hPa pws   29.43 hPa h= 52.3 kJ/kg   dT=
8.1 ˚C"
```

- **Hex Pairs** — Bytes are translated to hex pairs, consisting of digits 0 to 9 and letters a to f. Each pair describes a hexadecimal ASCII / ANSI code. Some codes translate to alpha-numeric values, others to symbols or non-printable control characters.

Example sting from temperature sensor:

```
SerialInString = "23 30 31 38 34 0D"
```

which translates to

```
#01 84 cr
```

- **Binary** — Bytes are processed on a bit-by-bit basis. Character 0 (Null, &b00) is a valid part of binary data streams. However, the CR800 uses Null terminated strings, so anytime a Null is received, a string is terminated. The termination is usually premature when reading binary data. To remedy this problem, use **SerialInBlock()** or **SerialInRecord()** when reading binary data. The input string variable must be an array set **As Long** data type, for example:

```
Dim SerialInString As Long
```

7.9.16.5.5 Serial I/O Memory Considerations

Several points regarding memory should be considered when receiving and processing serial data.

- **Serial buffer:** The serial port buffer, which is declared in **SerialOpen()**, must be large enough to hold all data a device will send. The buffer holds the data for subsequent transfer to variables. Allocate extra memory to the buffer when needed, but recognize that memory added to the buffer reduces *final-data memory* *(p. 489)*.

Note Concerning **SerialInRecord()** running in pipeline mode with ***NBytes*** (number of bytes) parameter = 0:

For the digital measurement sequence to know how much room to allocate in **Scan()** ***buffers*** (default of 3), **SerialInRecord()** allocates the buffer size specified by **SerialOpen()** (default 10,000, an overkill), or default 3 • 10,000 = 30 kB of buffer space. So, while making sure enough bytes are allocated in **SerialOpen()** (the number of bytes per record • ((records/Scan)+1) + at least one extra byte), there is reason not to make the buffer size too large. (Note that if the ***NumberOfBytes*** parameter is non-zero, then **SerialInRecord()** allocates only this many bytes instead of the number of bytes specified by **SerialOpen()**).

- **Variable Declarations** — Variables used to receive data from the serial buffer can be declared as **Public** or **Dim**. Declaring variables as **Dim** has the

effect of consuming less telecommunication bandwidth. When public variables are viewed in software, the entire **Public** table is transferred at the update interval. If the **Public** table is large, telecommunication bandwidth can be taxed such that other data tables are not collected.

- **String Declarations** — String variables are memory intensive. Determine how large strings are and declare variables just large enough to hold the string. If the sensor sends multiple strings at once, consider declaring a single string variable and read incoming strings one at a time.

  The CR800 adjusts upward the declared size of strings. One byte is always added to the declared length, which is then increased by up to another three bytes to make the length divisible by four.

  Declared string length, not number of characters, determines the memory consumed when strings are written to memory. Consequently, large strings not filled with characters waste significant memory.

7.9.16.5.6 Demonstration Program

CRBasic example *Receiving an RS-232 String* (p. 247) is provided as an exercise in serial input / output programming. The example only requires the CR800 and a single-wire jumper between **COM1 Tx** and **COM2 Rx**. The program simulates a temperature and relative humidity sensor transmitting RS-232 (simulated data comes out of **COM1** as an alpha-numeric string).

CRBasic Example 52. Receiving an RS-232 String

```
'This program example demonstrates CR800 serial I/O features by:
'  1. Simulating a serial sensor
'  2. Transmitting a serial string via COM1 TX.

'The serial string is received at COM2 RX via jumper wire.  Simulated
'air temperature = 27.435 F, relative humidity = 56.789 %.

'Wiring:
'COM1 TX (C1) ----- COM2 RX (C4)

'Serial Out Declarations
Public TempOut As Float
Public RhOut As Float

'Declare a string variable large enough to hold the output string.
Public SerialOutString As String * 25

'Serial In Declarations
'Declare a string variable large enough to hold the input string
Public SerialInString As String * 25

'Declare strings to accept parsed data.  If parsed data are strictly numeric, this
'array can be declared as Float or Long
Public InStringSplit(2) As String
Alias InStringSplit(1) = TempIn
Alias InStringSplit(2) = RhIn
```

```
'Main Program
BeginProg

  'Simulate temperature and RH sensor
  TempOut = 27.435                                'Set simulated temperature to transmit
  RhOut = 56.789                                  'Set simulated relative humidity to transmit

  Scan(5,Sec, 3, 0)

    'Serial Out Code
    'Transmits string "*27.435,56.789#" out COM1
    SerialOpen(Com1,9600,0,0,10000)               'Open a serial port

    'Build the output string
    SerialOutString = "*" & TempOut & "," & RhOut & "#"

    'Output string via the serial port
    SerialOut(Com1,SerialOutString,"",0,100)

    'Serial In Code
    'Receives string "27.435,56.789" via COM2
    'Uses * and # character as filters
    SerialOpen(Com2,9600,0,0,10000)               'Open a serial port

    'Receive serial data as a string
    '42 is ASCII code for "*", 35 is code for "#"
    SerialInRecord(Com2,SerialInString,42,0,35,"",01)

    'Parse the serial string
    SplitStr(InStringSplit(),SerialInString,"",2,0)

  NextScan
EndProg
```

7.9.16.6 Serial I/O Application Testing

A common problem when developing a serial I/O application is the lack of an immediately available serial device with which to develop and test programs. Using *HyperTerminal*, a developer can simulate the output of a serial device or capture serial input.

Note *HyperTerminal* is provided as a utility with *Windows XP* and earlier versions of Windows. *HyperTerminal* is not provided with later versions of Windows, but can be purchased separately from http://www.hilgraeve.com. HyperTerminal automatically converts binary data to ASCII on the screen. Binary data can be captured, saved to a file, and then viewed with a hexadecimal editor. Other terminal emulators are available from third-party vendors that facilitate capture of binary or hexadecimal data.

7.9.16.6.1 Configure HyperTerminal

Create a *HyperTerminal* instance file by clicking **Start** | **All Programs** | **Accessories** | **Communications** | **HyperTerminal**. The windows in the figures *HyperTerminal Connection Description* (p. 249) through *HyperTerminal ASCII Setup* (p. 250) are presented. Enter an instance name and click **OK**.

Figure 66. HyperTerminal New Connection Description

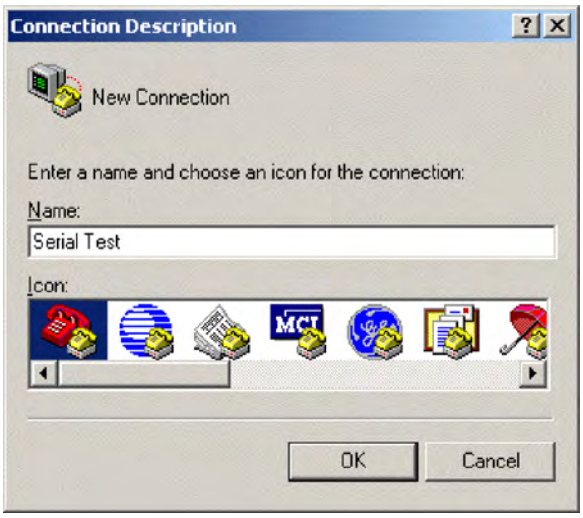

Figure 67. HyperTerminal Connect-To Settings

Figure 68. HyperTerminal COM-Port Settings Tab

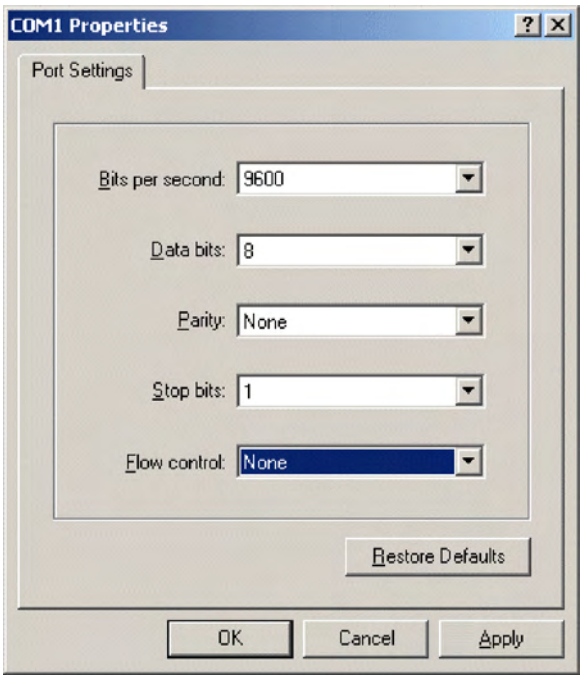

Click **File** | **Properties** | **Settings** | **ASCII Setup**... and set as shown.

Figure 69. HyperTerminal ASCII Setup

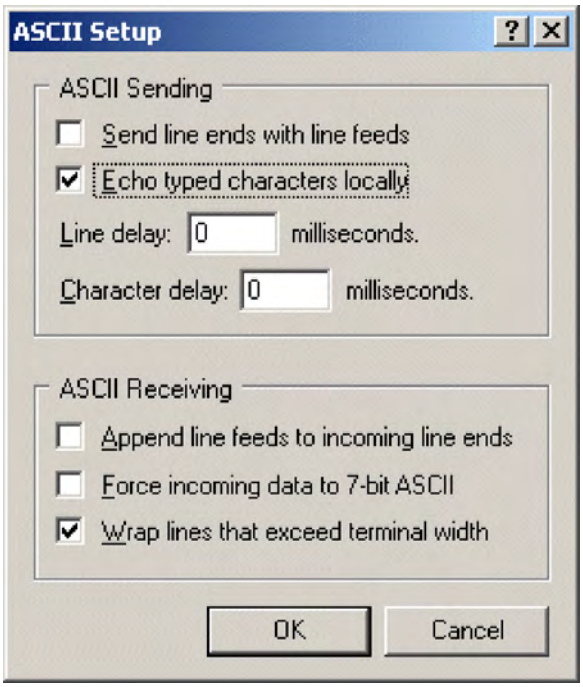

7.9.16.6.2 Create Send-Text File

Create a file from which to send a serial string. The file shown in the figure *HyperTerminal Send Text-File Example* (p. 251) will send the string **[2008:028:10:36:22]C** to the CR800. Use *Notepad*® (Microsoft® *Windows*® utility) or some other text editor that will not place hidden characters in the file.

Figure 70. HyperTerminal Send Text-File Example

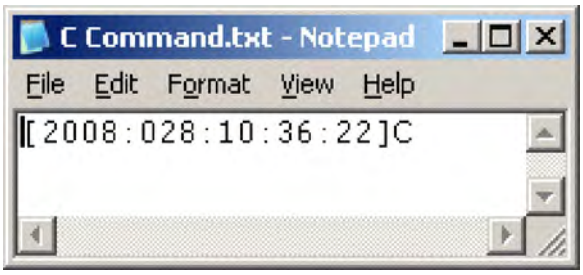

To send the file, click **Transfer** | **Send Text File** | **Browse** for file, then click **OK**.

7.9.16.6.3 Create Text-Capture File

Figure *HyperTerminal Text-Capture File Example* (p. 251) shows a *HyperTerminal* capture file with some data. The file is empty before use commences.

Figure 71. HyperTerminal Text-Capture File Example

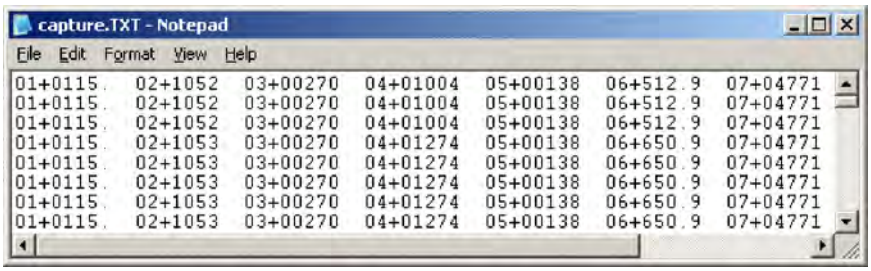

Engage text capture by clicking on **Transfer** | **Capture Text** | **Browse**, select the file, and then click **OK**.

7.9.16.6.4 Serial I/O Example II

CRBasic example *Measure Sensors / Send RS-232 Data* (p. 252) illustrates a use of CR800 serial I/O features.

Example — An energy company has a large network of older CR510 dataloggers into which new CR800 dataloggers are to be incorporated. The CR510 dataloggers are programmed to output data in the legacy Campbell Scientific Printable ASCII format, which satisfies requirements of the customer's data-acquisition network. The network administrator prefers to synchronize the CR510 clocks from a central computer using the legacy Campbell Scientific **C** command. The CR510 datalogger is hard-coded to output printable ASCII and recognize the **C** command. CR800 dataloggers, however, require custom programming to output and accept these same ASCII strings. A similar program can be used to emulate CR10X and CR23X dataloggers.

Solution — CRBasic example *Measure Sensors / Send RS-232 Data* (p. 252) imports and exports serial data with the CR800 RS-232 port. Imported data are expected to have the form of the legacy Campbell Scientific time set **C** command. Exported data has the form of the legacy Campbell Scientific Printable ASCII format.

Note The nine-pin RS-232 port can be used to download the CR800 program if the **SerialOpen()** baud rate matches that of the *datalogger support software* (p. 630). However, two-way PakBus® communications will cause the CR800 to occasionally send unsolicited PakBus® packets out the RS-232 port for at least 40 seconds after the last PakBus® communication. This will produce some "noise" on the intended data-output signal.

Monitor the CR800 RS-232 port with *HyperTerminal* as described in the section *Configure HyperTerminal* (p. 248). Send **C**-command file to set the clock according to the text in the file.

Note The *HyperTerminal* file will not update automatically with actual time. The file only simulates a clock source for the purposes of this example.

CRBasic Example 53. Measure Sensors / Send RS-232 Data

```
'This program example demonstrates the import and export serial data via the CR800 RS-232
'port. Imported data are expected to have the form of the legacy Campbell Scientific
'time set C command:

'  [YR:DAY:HR:MM:SS]C

'Exported data has the form of the legacy Campbell Scientific Printable ASCII format:

'  01+0115. 02+135 03+00270 04+7999 05+00138 06+07999 07+04771

'Declarations
'Visible Variables
Public StationID
Public KWH_In
Public KVarH_I
Public KWHHold
Public KVarHold
Public KWHH
Public KvarH
Public InString As String * 25
Public OutString As String * 100

'Hidden Variables
Dim i, rTime(9), OneMinData(6), OutFrag(6) As String
Dim InStringSize, InStringSplit(5) As String
Dim Date, Month, Year, DOY, Hour, Minute, Second, uSecond
Dim LeapMOD4, LeapMOD100, LeapMOD400
Dim Leap4 As Boolean, Leap100 As Boolean, Leap400 As Boolean
Dim LeapYear As Boolean
Dim ClkSet(7) As Float
```

```
'One Minute Data Table
DataTable(OneMinTable,true,-1)
  OpenInterval                'sets interval same as found in CR510
  DataInterval(0,1,Min,10)
  Totalize(1, KWHH,FP2,0)
  Sample(1, KWHHold,FP2)
  Totalize(1, KvarH,FP2,0)
  Sample(1, KVarHold,FP2)
  Sample(1, StationID,FP2)
EndTable

'Clock Set Record Data Table
DataTable(ClockSetRecord,True,-1)
  Sample(7,ClkSet(),FP2)
EndTable

'Subroutine to convert date formats (day-of-year to month and date)
Sub DOY2MODAY

  'Store Year, DOY, Hour, Minute and Second to Input Locations.
  Year = InStringSplit(1)
  DOY = InStringSplit(2)
  Hour = InStringSplit(3)
  Minute = InStringSplit(4)
  Second = InStringSplit(5)
  uSecond = 0

  'Check if it is a leap year:
  'If Year Mod 4 = 0 and Year Mod 100 <> 0, then it is a leap year OR
  'If Year Mod 4 = 0, Year Mod 100 = 0, and Year Mod 400 = 0, then it
  'is a leap year

  LeapYear = 0                        'Reset leap year status location

  LeapMOD4 = Year MOD 4
  LeapMOD100 = Year MOD 100
  LeapMOD400 = Year MOD 400
  If LeapMOD4 = 0 Then Leap4 = True Else Leap4 = False
  If LeapMOD100 = 0 Then Leap100 = True Else Leap100 = False
  If LeapMOD400 = 0 Then Leap400 = True Else Leap400 = False

  If Leap4 = True Then
    LeapYear = True
    If Leap100 = True Then
      If Leap400 = True Then
        LeapYear = True
      Else
        LeapYear = False
      EndIf
    EndIf
  Else
    LeapYear = False
  EndIf
```

```
  'If it is a leap year, use this section.
  If (LeapYear = True) Then
    Select Case DOY
      Case Is < 32
        Month = 1
        Date = DOY
      Case Is < 61
        Month = 2
        Date = DOY + -31
      Case Is < 92
        Month = 3
        Date = DOY + -60
      Case Is < 122
        Month = 4
        Date = DOY + -91
      Case Is < 153
        Month = 5
        Date = DOY + -121
      Case Is < 183
        Month = 6
        Date = DOY + -152
      Case Is < 214
        Month = 7
        Date = DOY + -182
      Case Is < 245
        Month = 8
        Date = DOY + -213
      Case Is < 275
        Month = 9
        Date = DOY + -244
      Case Is < 306
        Month = 10
        Date = DOY + -274
      Case Is < 336
        Month = 11
        Date = DOY + -305
      Case Is < 367
        Month = 12
        Date = DOY + -335
    EndSelect

'If it is not a leap year, use this section.
  Else
    Select Case DOY
      Case Is < 32
        Month = 1
        Date = DOY
      Case Is < 60
        Month = 2
        Date = DOY + -31
      Case Is < 91
        Month = 3
        Date = DOY + -59
```

```
      Case Is < 121
        Month = 4
        Date = DOY + -90
      Case Is < 152
        Month = 5
        Date = DOY + -120
      Case Is < 182
        Month = 6
        Date = DOY + -151
      Case Is < 213
        Month = 7
        Date = DOY + -181
      Case Is < 244
        Month = 8
        Date = DOY + -212
      Case Is < 274
        Month = 9
        Date = DOY + -243
      Case Is < 305
        Month = 10
        Date = DOY + -273
      Case Is < 336
        Month = 11
        Date = DOY + -304
      Case Is < 366
        Month = 12
        Date = DOY + -334
    EndSelect
  EndIf
EndSub

'//////////////////////////// PROGRAM ////////////////////////////
BeginProg
  StationID = 4771
  Scan(1,Sec, 3, 0)

    '////////////////Measurement Section//////////////////////
    'PulseCount(KWH_In, 1, 1, 2, 0, 1, 0)  'Activate this line in working program
    KWH_In = 4.5            'Simulation -- delete this line from working program

    'PulseCount(KVarH_I, 1, 2, 2, 0, 1, 0) 'Activate this line in working program
    KVarH_I = 2.3           'Simulation -- delete this line from working program
    KWHH = KWH_In
    KvarH = KVarH_I
    KWHHold = KWHH + KWHHold
    KVarHold = KvarH + KVarHold

    CallTable OneMinTable

    '//////////////////Serial I/O Section//////////////////
    SerialOpen(ComRS232,9600,0,0,10000)
```

```
    '///////////////Serial Time Set Input Section///////////////
    'Accept old C command -- [2008:028:10:36:22]C -- parse, process, set
    'clock (Note: Chr(91) = "[", Chr(67) = "C")
    SerialInRecord(ComRS232,InString,91,0,67,InStringSize,01)

    If InStringSize <> 0 Then
      SplitStr(InStringSplit,InString,"",5,0)
      Call DOY2MODAY                        'Call subroutine to convert day-of-year
                                            'to month & day
      ClkSet(1) = Year
      ClkSet(2) = Month
      ClkSet(3) = Date
      ClkSet(4) = Hour
      ClkSet(5) = Minute
      ClkSet(6) = Second
      ClkSet(7) = uSecond
      'Note: ClkSet array requires year, month, date, hour, min, sec, msec
      ClockSet(ClkSet())
      CallTable(ClockSetRecord)
    EndIf

    '////////////////Serial Output Section//////////////////
    'Construct old Campbell Scientific Printable ASCII data format and output to COM1

    'Read datalogger clock
    RealTime(rTime)
    If TimeIntoInterval(0,5,Sec) Then
      'Load OneMinData table data for processing into printable ASCII
      GetRecord(OneMinData(),OneMinTable,1)

      'Assign +/- Sign
      For i=1 To 6
        If OneMinData(i) < 0 Then
          'Note: chr45 is - sign
          OutFrag(i)=CHR(45) & FormatFloat(ABS(OneMinData(i)),"%05g")
        Else
          'Note: chr43 is + sign
          OutFrag(i)=CHR(43) & FormatFloat(ABS(OneMinData(i)),"%05g")
        EndIf
      Next i

      'Concatenate Printable ASCII string, then push string out RS-232
      '(first 2 fields are ID, hhmm):
      OutString = "01+0115." & "  02+"  & FormatFloat(rTime(4),"%02.0f") & _
        FormatFloat(rTime(5),"%02.0f")
      OutString = OutString & "  03" & OutFrag(1) & "  04" & OutFrag(2) & _
        "  05" & OutFrag(3)
      OutString = OutString & "  06" & OutFrag(4) & "  07" & OutFrag(5) & _
        CHR(13) & CHR(10) & "" 'add CR LF null

      'Send printable ASCII string out RS-232 port
      SerialOut(ComRS232,OutString,"",0,220)
    EndIf

  NextScan
EndProg
```

7.9.16.7 Serial I/O Q & A

Q: I am writing a CR800 program to transmit a serial command that contains a null character. The string to transmit is:

```
CHR(02)+CHR(01)+"CWGT0"+CHR(03)+CHR(00)+CHR(13)+CHR(10)
```

How does the logger handle the null character?
Is there a way that we can get the logger to send this?

A: Strings created with CRBasic are NULL terminated. Adding strings together means the second string will start at the first null it finds in the first string.

Use **SerialOutBlock()** instruction, which lets you send null characters, as shown below.

```
SerialOutBlock(COMRS232, CHR(02) + CHR(01) + "CWGT0" +
CHR(03),8)
SerialOutBlock(COMRS232, CHR(0),1)
SerialOutBlock(COMRS232, CHR(13) + CHR(10),2)
```

Q: Please summarize when the CR800 powers the RS-232 port. I get that there is an "always on" setting. How about when there are beacons? Does the **SerialOpen()** instruction cause other power cycles?

A: The RS-232 port is left on under the following conditions:

- When the setting **RS-232Power** *(p. 601)* is set
- When a **SerialOpen()** with argument ***COMRS232*** is used in the program

Both conditions power-up the interface and leave it on with no timeout. If **SerialClose()** is used after **SerialOpen()**, the port is powered down and in a state waiting for characters to come in.

Under normal operation, the port is powered down waiting for input. After receiving input, there is a 40 second software timeout that must expire before shutting down. The 40 second timeout is generally circumvented when communicating with the *datalogger support software* *(p. 93)* because the software sends information as part of the protocol that lets the CR800 know that it can shut down the port.

When in the "dormant" state with the interface powered down, hardware is configured to detect activity and wake up, but there is the penalty of losing the first character of the incoming data stream. PakBus® takes this into consideration in the "ring packets" that are preceded with extra sync bytes at the start of the packet. For this reason **SerialOpen()** leaves the interface powered up so no incoming bytes are lost.

When the CR800 has data to send with the RS-232 port, if the data are not a response to a received packet, such as sending a beacon, it will power up the interface, send the data, and return to the "dormant" state with no 40 second timeout.

Q: How can I reference specific characters in a string?

A: The third 'dimension' of a string variable provides access to that part of the string after the position specified. For example, if

```
TempData = "STOP"
```

then,

```
TempData(1,1,2) = "TOP"
TempData(1,1,3) = "OP"
TempData(1,1,1) = "STOP"
```

To handle single-character manipulations, declare a string with a size of 1. This single-character string is then used to search for specific characters. In the following example, the first character of string ***LargerString*** is determined and used to control program logic:

```
Public TempData As String * 1
  TempData = LargerString
  If TempData = "S" Then...
```

A single character can be retrieved from any position in a string. The following example retrieves the fifth character of a string:

```
Public TempData As String * 1
TempData = LargerString(1,1,5)
```

Q: How can I get **SerialIn()**, **SerialInBlock()**, and **SerialInRecord()** to read extended characters?

A: Open the port in binary mode (mode 3) instead of PakBus-enabled mode (mode 0).

Q: Tests with an oscilloscope showed the sensor was responding quickly, but the data were getting held up in the internals of the CR800 somewhere for 30 ms or so. Characters at the start of a response from a sensor, which come out in 5 ms, were apparently not accessible by the program for 30 ms or so; in fact, no data were in the serial buffer for 30 ms or so.

A: As a result of internal buffering in the CR800 and / or external interfaces, data may not appear in the serial port buffer for a period ranging up to 50 ms (depending on the serial port being used). This should be kept in mind when setting timeouts for the **SerialIn()** and **SerialOut()** instructions, or user-defined timeouts in constructs using the **SerialInChk()** instruction.

Q: What are the termination conditions that will stop incoming data from being stored?

A: Termination conditions:

- ***TerminationChar*** argument is received
- ***MaxNumChars*** argument is met
- ***TimeOut*** argument is exceeded

SerialIn() does NOT stop storing when a Null character (&h00) is received (unless a NULL character is specified as the termination character). As a string variable, a NULL character received will terminate the string, but nevertheless characters after a NULL character will continue to be received into the variable space until one of the termination conditions is met. These characters can later be accessed with **MoveBytes()** if necessary.

Q: How can a variable populated by **SerialIn()** be used in more than one sequence and still avoid using the variable in other sequences when it contains old data?

A: A simple caution is that the destination variable should not be used in more than one sequence to avoid using the variable when it contains old data. However, this is not always possible and the root problem can be handled more elegantly.

When data arrives independent from execution of the CRBasic program, such as occurs with streaming data, measures must be taken to ensure that the incoming data are updated in time for subsequent processes using that data. When the task of writing data is separate from the task of reading data, you should control the flow of data with deliberate control features such as the use of flags or a time-stamped weigh point as can be obtained from a data table.

There is nothing unique about **SerialIn()** with regard to understanding how to correctly write to and read from global variables using multiple sequences. **SerialIn()** is writing into an array of characters. Many other instructions write into an array of values (characters, floats, or longs), such as **Move()**, **MoveBytes()**, **GetVariables()**, **SerialInRecord()**, **SerialInBlock()**. In all cases, when writing to an array of values, it is important to understand what you are reading, if you are reading it asynchronously, in other words reading it from some other task that is polling for the data at the same time as it is being written, whether that other task is some other machine reading the data, like *LoggerNet*, or a different sequence, or task, within the same machine. If the process is relatively fast, like the **Move()** instruction, and an asynchronous process is reading the data, this can be even worse because the "reading old data" will happen less often but is more insidious because it is so rare.

7.9.17 Serial I/O: SDI-12 Sensor Support — Programming Resource

Related Topics:
- *SDI-12 Sensor Support — Overview* (p. 72)
- *SDI-12 Sensor Support — Details* (p. 344)
- *Serial I/O: SDI-12 Sensor Support — Programming Resource* (p. 259)
- *SDI-12 Sensor Support — Instructions* (p. 529)

See the table *CR800 Terminal Definitions* (p. 76) for **C** terminal assignments for SDI-12 input. Multiple SDI-12 sensors can be connected to each configured terminal. If multiple sensors are wired to a single terminal, each sensor must have a unique address. SDI-12 standard v 1.3 sensors accept addresses **0** through **9**, **a** through **z**, and **A** through **Z**. For a CRBasic programming example demonstrating the changing of an SDI-12 address on the fly, see Campbell Scientific publication *PS200/CH200 12 V Charging Regulators*, which is available at *www.campbellsci.com*.

The CR800 supports SDI-12 communication through two modes — transparent mode and programmed mode.

- Transparent mode facilitates sensor setup and troubleshooting. It allows commands to be manually issued and the full sensor response viewed. Transparent mode does not record data.
- Programmed mode automates much of the SDI-12 protocol and provides for data recording.

7.9.17.1 SDI-12 Transparent Mode

System operators can manually interrogate and enter settings in probes using transparent mode. Transparent mode is useful in troubleshooting SDI-12 systems because it allows direct communication with probes.

Transparent mode may need to wait for commands issued by the programmed mode to finish before sending responses. While in transparent mode, CR800 programs may not execute. CR800 security may need to be unlocked before transparent mode can be activated.

Transparent mode is entered while the PC is in telecommunications with the CR800 through a terminal emulator program. It is easily accessed through a terminal emulator. Campbell Scientific DevConfig program has a terminal utility, as to other *datalogger support software* (p. 93). Keyboard displays cannot be used.

To enter the SDI-12 transparent mode, enter the datalogger support software terminal emulator as shown in the figure *Entering SDI-12 Transparent Mode* (p. 261). Press **Enter** until the CR800 responds with the prompt **CR800**>. Type **SDI12** at the prompt and press **Enter**. In response, the query **Enter Cx Port** is presented with a list of available ports. Enter the port number assigned to the terminal to which the SDI-12 sensor is connected. For example, port **1** is entered for terminal **C1**. An **Entering SDI12 Terminal** response indicates that SDI-12 transparent mode is active and ready to transmit SDI-12 commands and display responses.

Figure 72. Entering SDI-12 Transparent Mode

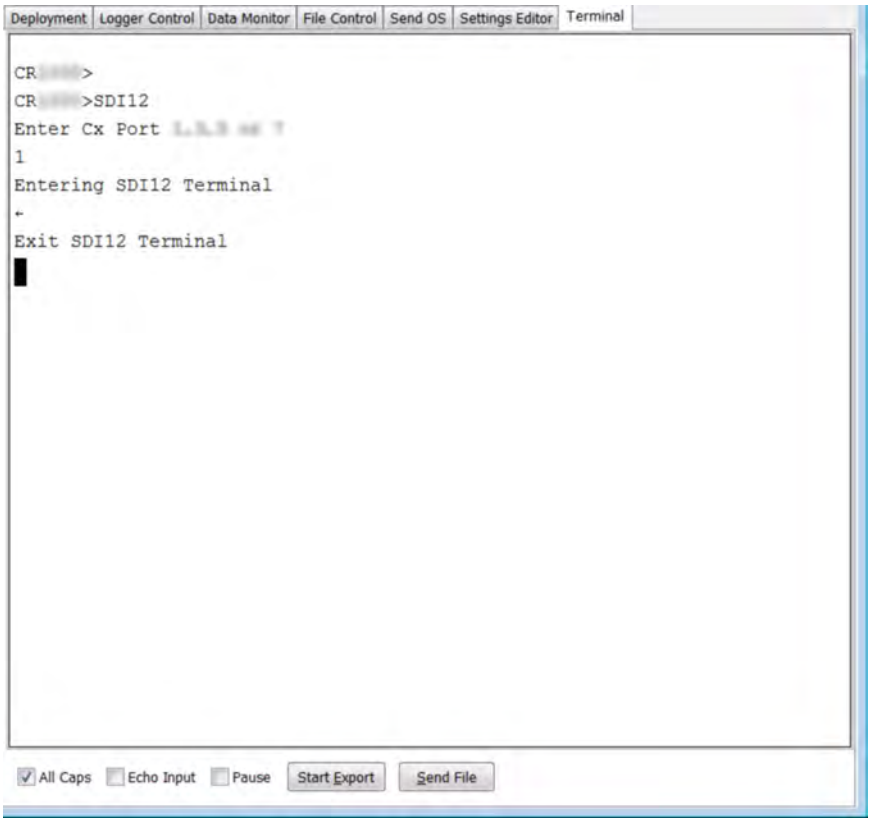

7.9.17.1.1 SDI-12 Transparent Mode Commands

Commands have three components:

- Sensor address (**a**) — a single character, and is the first character of the command. Sensors are usually assigned a default address of zero by the manufacturer. Wildcard address (?) is used in the Address Query command. Some manufacturers may allow it to be used in other commands.
- Command body (for example, **M1**) — an upper case letter (the "command") followed by alphanumeric qualifiers.
- Command termination (**!**) — an exclamation mark.

An active sensor responds to each command. Responses have several standard forms and terminate with <CR><LF> (carriage return–line feed).

SDI-12 commands and responses are defined by the SDI-12 Support Group (www.sdi-12.org) and are summarized in the table *Standard SDI-12 Command & Response Set* (p. 262). Sensor manufacturers determine which commands to support. The most common commands are detailed in the table *SDI-12 Commands for Transparent Mode* (p. 262).

Table 43. SDI-12 Commands for Transparent Mode

Command Name	*Command Syntax*[1]	*Response*[2] *Notes*
Break	Continuous spacing for at least 12 milliseconds	None
Address Query	**?!**	**a<CR><LF>**
Acknowledge Active	**a!**	**a<CR><LF>**
Change Address	**aAb!**	**b<CR><LF>** (support for this command is required only if the sensor supports software changeable addresses)
Start Concurrent Measurement	**aC!**	**atttnn<CR><LF>**
Additional Concurrent Measurements	**aC1!** ... **aC9!**	**atttnn<CR><LF>**
Additional Concurrent Measurements and Request CRC	**aCC1!** ... **aCC9!**	**atttnn<CR><LF>**
Send Data	**aD0!** ... **aD9!**	**a<values><CR><LF>** or **a<values><CRC><CR><LF>**
Send Identification	**aI!**	**allcccccccmmmmmmvvvxxx...xx<CR><LF>**. For example, **013CampbellCS1234003STD.03.01** means address = 0, SDI-12 protocol version number = 1.3, manufacturer is Campbell Scientific, CS1234 is the sensor model number (fictitious in this example), 003 is the sensor version number, STD.03.01 indicates the sensor revision number is .01.
Start Measurement[3]	**aM!**	**atttn<CR><LF>**
Start Measurement and Request CRC[3]	**aMC!**	**atttn<CR><LF>**
Additional Measurements[3]	**aM1!** ... **aM9!**	**atttn<CR><LF>**
Additional Measurements and Request CRC[3]	**aMC1!** ... **aMC9!**	**atttn<CR><LF>**
Continuous Measurements	**aR0!** ... **aR9!**	**a<values><CR><LF>** (formatted like the **D** commands)
Continuous Measurements and Request CRC	**aRC0!** ... **aRC9!**	**a<values><CRC><CR><LF>** (formatted like the **D** commands)
Start Verification[3]	**aV!**	**atttn<CR><LF>**

[1]If the terminator '**!**' is not present, the command will not be issued. The CRBasic **SDI12Recorder()** instruction, however, will still pick up data resulting from a previously issued **C!** command.

[2]Complete response string can be obtained when using the **SDI12Recorder()** instruction by declaring the ***Destination*** variable **as String**.

[3]This command may result in a service request.

SDI-12 Address Commands

Address and identification commands request metadata about the sensor. Connect only a single probe when using these commands.

?!

Requests the sensor address. Response is address, **a**.

Syntax:

```
?!
```

aAb!

Changes the sensor address. **a** is the current address and **b** is the new address. Response is the new address.

Syntax:

```
aAb!
```

aI!

Requests the sensor identification. Response is defined by the sensor manufacturer, but usually includes the sensor address, SDI-12 version, manufacturer's name, and sensor model information. Serial number or other sensor specific information may also be included.

Syntax:

```
aI!
```

An example of a response from the **aI!** command is:

```
013NRSYSINC1000001.2101 <CR><LF>
```

where:

0 is the SDI-12 address.
13 is the SDI-12 version (1.3).
NRSYSINC indicates the manufacturer.
100000 indicates the sensor model.
1.2 is the sensor version.
101 is the sensor serial number.

SDI-12 Start Measurement Commands

Measurement commands elicite responses in the form:

```
atttnn
```

where:

a is the sensor address
ttt is the time (s) until measurement data are available
nn is the number of values to be returned when one or more subsequent **D!** commands are issued.

aMv!

Starts a standard measurement. Qualifier **v** is a variable between 1 and 9. If supported by the sensor manufacturer, **v** requests variant data. Variants may include alternate units (e.g., °C or °F), additional values (e.g., level and temperature), or a diagnostic of the sensor internal battery.

Syntax:

```
aMv!
```

As an example, the response from the command **5M!** is:

```
500410
```

where:

5 reports the sensor SDI-12 address.

004 indicates the data will be available in 4 seconds.

10 indicates that 10 values will be available.

The command **5M7!** elicites a similar response, but the appendage **7** instructs the sensor to return the voltage of the internal battery.

aC!

Start concurrent measurement. The CR800 requests a measurement, continues program execution, and picks up the requested data on the next pass through the program. A measurement request is then sent again so data are ready on the next scan. The datalogger scan rate should be set such that the resulting skew between time of measurement and time of data collection does not compromise data integrity. This command is new with v. 1.2 of the SDI-12 specification.

Syntax:

```
aC!
```

Aborting an SDI-12 Measurement Command

A measurement command (**M!** or **C!**) is aborted when any other valid command is sent to the sensor.

SDI-12 Send Data Command

Send data commands are normally issued automatically by the CR800 after the **aMv!** or **aCv!** measurement commands. In transparent mode through CR800 terminal commands, you need to issue these commands in series. When in automatic mode, if the expected number of data values are not returned in response to a **aD0!** command, the datalogger issues **aD1!**, **aD2!**, etc., until all data are received. In transparent mode, you must do likewise. The limiting constraint is that the total number of characters that can be returned to a **aDv!** command is 35 (75 for **aCv!**). If the number of characters exceed the limit, the remainder of the response are obtained with subsequent **aDv!** commands wherein **v** increments with each iteration.

aDv!

Request data from the sensor.

Example Syntax:

```
aD0!
```

SDI-12 Continuous Measurement Command (aR0! to aR9!)

Sensors that are continuously monitoring, such as a shaft encoder, do not require an **M** command. They can be read directly with the Continuous Measurement Command (**R0!** to **R9!**). For example, if the sensor is operating in a continuous

measurement mode, then **aR0!** will return the current reading of the sensor. Responses to **R** commands are formatted like responses to send data (**aDv!**) commands. The main difference is that **R** commands do not require a preceding **M** command. The maximum number of characters returned in the <values> part of the response is **75**.

Each **R** command is an independent measurement. For example, **aR5!** need not be preceded by **aR0!** through **aR4!**. If a sensor is unable to take a continuous measurement, then it must return its address followed by **<CR><LF>** (carriage return and line feed) in response to an **R** command. If a CRC was requested, then the **<CR><LF>** must be preceded by the CRC.

aRv!

Request continuous data from the sensor.

Example Syntax:

```
aR5!
```

7.9.17.2 SDI-12 Recorder Mode

The CR800 can be programmed to act as an SDI-12 recording device or as an SDI-12 sensor.

For troubleshooting purposes, responses to SDI-12 commands can be captured in programmed mode by placing a variable declared **As String** in the variable parameter. Variables not declared **As String** will capture only numeric data.

Another troubleshooting tool is the terminal-mode snoop utility, which allows monitoring of SDI-12 traffic. Enter terminal mode as described in *SDI-12 Transparent Mode* (p. 260), issue CRLF (**<Enter>** key) until CR800> prompt appears. Type **W** and then **<Enter>**. Type **9** in answer to **Select:**, **100** in answer to **Enter timeout (secs):**, **Y** to **ASCII (Y)?**. SDI-12 communications are then opened for viewing.

The **SDI12Recorder()** instruction automates the issuance of commands and interpretation of sensor responses. Commands entered into the **SDIRecorder()** instruction differ slightly in function from similar commands entered in transparent mode. In transparent mode, for example, the operator manually enters **aM!** and **aD0!** to initiate a measurement and get data, with the operator providing the proper time delay between the request for measurement and the request for data. In programmed mode, the CR800 provides command and timing services within a single line of code. For example, when the **SDI12Recorder()** instruction is programmed with the **M!** command (note that the SDI-12 address is a separate instruction parameter), the CR800 issues the **aM!** *and* **aD0!** commands with proper elapsed time between the two. The CR800 automatically issues retries and performs other services that make the SDI-12 measurement work as trouble free as possible. Table *SDI-12Recorder() Commands* (p. 266) summarizes CR800 actions triggered by some **SDI12Recorder()** commands.

If the **SDI12Recorder()** instruction is not successful, **NAN** will be loaded into the first variable. See *NAN and ±INF* (p. 458) for more information.

Command Name	SDIRecorder() SDICommand Argument	SDI-12 Command Sent Sensor Response[1] CR800 Response Notes
Address Query	**?!**	CR800: issues **a?!** command. Only one sensor can be attached to the **C** terminal configured for SDI-12 for this command to elicit a response. Sensor must support this command.
Change Address	**Ab!**	CR800: issues **aAb!** command
Concurrent Measurement	**Cv!, CCv!**	CR800: issues **aCv!** command Sensor: responds with **atttnn** CR800: if *ttt* = **0**, issues **aDv!** command(s). If *nnn* = **0** then **NAN** put in the first element of the array. Sensor: responds with data CR800: else, if **ttt** > 0 then moves to next CRBasic program instruction CR800: at next time **SDIRecorder()** is executed, if elapsed time < **ttt**, moves to next CRBasic instruction CR800: else, issues **aDv!** command(s) Sensor: responds with data CR800: issues **aCv!** command (to request data for next scan)
Alternate Concurrent Measurement	**Cv** (note — no ! termination)[2]	***CR800: tests to see if ttt expired. If ttt not expired, loads 1e9 into first variable and then moves to next CRBasic instruction. If ttt expired, issues aDv! command(s). See section Alternate Start Concurrent Measurement Command (Cv) (p. 266)*** Sensor: responds to **aDv!** command(s) with data, if any. If no data, loads NAN into variable. CR800: moves to next CRBasic instruction (does not re-issue **aCv!** command)
Send Identification	**I!**	CR800: issues **aI!** command
Start Measurement	**M!, Mv!, MCv!**	CR800: issues **aMv!** command Sensor: responds with **atttnn** CR800: If *nnn* = **0** then **NAN** put in the first element of the array. CR800: waits until **ttt**[3] seconds (unless a service request is received). Issues **aDv!** command(s). If a service request is received, issues **aDv!** immediately. Sensor: responds with data
Continuous Measurements	**Rv!, RCv!**	CR800: issues **aRv!** command
Start Verification	**V!**	CR800: issues **aV!** command

[1]See table *SDI-12 Commands for Transparent Mode* ***(p. 262)*** for complete sensor responses.

[2]Use variable replacement in program to use same instance of **SDI12Recorder()** as issued **aCV!** (see the CRBasic example *Using Alternate Concurrent Command (aC)* ***(p. 270)***).

[3]Note that **ttt** is local only to the **SDIRecorder()** instruction. If a second **SDIRecorder()** instruction is used, it will have its own **ttt**.

Note **aCv** and **aCv!** are different commands — **aCv** does not end with **!**.

The **SDIRecorder() aCv** command facilitates using the SDI-12 standard Start Concurrent command (**aCv!**) without the back-to-back measurement sequence normal to the CR800 implementation of **aCv!**.

Consider an application wherein four SDI-12 temperature sensors need to be near-simultaneously measured at a five minute interval within a program that scans every five seconds. The sensors requires 95 seconds to respond with data after a measurement request. Complicating the application is the need for minimum power usage, so the sensors must power down after each measurement.

This application provides a focal point for considering several measurement strategies. The simplest measurement is to issue a **M!** measurement command to each sensor as shown in the following CRBasic example:

```
Public BatteryVolt
Public Temp1, Temp2, Temp3, Temp4

BeginProg
  Scan(5,Sec,0,0)

    'Non-SDI-12 measurements here

    SDI12Recorder(Temp1,1,0,"M!",1.0,0)
    SDI12Recorder(Temp2,1,1,"M!",1.0,0)
    SDI12Recorder(Temp3,1,2,"M!",1.0,0)
    SDI12Recorder(Temp4,1,3,"M!",1.0,0)

  NextScan
EndProg
```

However, the code sequence has three problems:

1. It does not allow measurement of non-SDI-12 sensors at the required frequency because the **SDI12Recorder()** instruction takes too much time.
2. It does not achieve required five-minute sample rate because each **SDI12Recorder()** instruction will take about 95 seconds to complete before the next **SDI12Recorder()** instruction begins, resulting is a real scan rate of about 6.5 minutes.
3. There is a 95 s time skew between each sensor measurement.

Problem 1 can be remedied by putting the SDI-12 measurements in a **SlowSequence** scan. Doing so allows the SDI-12 routine to run its course without affecting measurement of other sensors, as follows:

```
Public BatteryVolt
Public Temp(4)

BeginProg

  Scan(5,Sec,0,0)
    'Non-SDI-12 measurements here
  NextScan

  SlowSequence
    Scan(5,Min,0,0)
      SDI12Recorder(Temp(1),1,0,"M!",1.0,0)
      SDI12Recorder(Temp(2),1,1,"M!",1.0,0)
      SDI12Recorder(Temp(3),1,2,"M!",1.0,0)
```

```
      SDI12Recorder(Temp(4),1,3,"M!",1.0,0)
    NextScan
  EndSequence

EndProg
```

However, problems 2 and 3 still are not resolved. These can be resolved by using the concurrent measurement command, **C!**. All measurements will be made at about the same time and execution time will be about 95 seconds, well within the 5 minute scan rate requirement, as follows:

```
Public BatteryVolt
Public Temp(4)

BeginProg

  Scan(5,Sec,0,0)
    'Non-SDI-12 measurements here
  NextScan

  SlowSequence
    Scan(5,Min,0,0)
      SDI12Recorder(Temp(1),1,0,"C!",1.0,0)
      SDI12Recorder(Temp(2),1,1,"C!",1.0,0)
      SDI12Recorder(Temp(3),1,2,"C!",1.0,0)
      SDI12Recorder(Temp(4),1,3,"C!",1.0,0)
    NextScan

EndProg
```

A new problem introduced by the **C!** command, however, is that it causes high power usage by the CR800. This application has a very tight power budget. Since the **C!** command reissues a measurement request immediately after receiving data, the sensors will be in a high power state continuously. To remedy this problem, measurements need to be started with **C!** command, but stopped short of receiving the next measurement command (hard-coded part of the **C!** routine) after their data are polled. The **SDI12Recorder()** instruction **C** command (not **C!**) provides this functionality as shown in CRBasic example *Using Alternate Concurrent Command (aC)* *(p. 270).* A modification of this program can also be used to allow near-simultaneous measurement of SDI-12 sensors without requesting additional measurements, such as may be needed in an event-driven measurement.

Note When only one SDI-12 sensor is attached, that is, multiple sensor measurements do not need to start concurrently, another reliable method for making SDI-12 measurements without affecting the main scan is to use the CRBasic **SlowSequence** instruction and the SDI-12 **M!** command. The main scan will continue to run during the ***ttt*** time returned by the SDI-12 sensor. The trick is to synchronize the returned SDI-12 values with the main scan.

aCv

Start alternate concurrent measurement.

Syntax:

```
aCv
```

CRBasic Example 54. Using SDI12Sensor() to Test Cv Command

```
'This program example demonstrates how to use CRBasic to simulate four SDI-12 sensors.  This
program can be used to
'produce measurements to test the CRBasic example Using Alternate Concurrent Command (aC) (p. 270).

Public Temp(4)

DataTable(Temp,True,0)
  DataInterval(0,5,Min,10)
  Sample(4,Temp(),FP2)
EndTable

BeginProg
  Scan(5,Sec,0,0)

    PanelTemp(Temp(1),250) 'Measure CR800 wiring panel temperature to use as base for
                           'simulated temperatures Temp(2), Temp(3), and Temp(4).
    Temp(2) = Temp(1) + 5
    Temp(3) = Temp(1) + 10
    Temp(4) = Temp(1) + 15

    CallTable Temp

  NextScan

  SlowSequence
    Do
      'Note SDI12SensorSetup / SDI12SensorResponse must be renewed
      'after each successful SDI12Recorder() poll.
      SDI12SensorSetup(1,1,0,95)
      Delay(1,95,Sec)
      SDI12SensorResponse(Temp(1))
    Loop
  EndSequence

  SlowSequence
    Do
      SDI12SensorSetup(1,3,1,95)
      Delay(1,95,Sec)
      SDI12SensorResponse(Temp(2))
    Loop
  EndSequence

  SlowSequence
    Do
      SDI12SensorSetup(1,5,2,95)
      Delay(1,95,Sec)
      SDI12SensorResponse(Temp(3))
    Loop
  EndSequence
```

```
  SlowSequence
    Do
      SDI12SensorSetup(1,7,3,95)
      Delay(1,95,Sec)
      SDI12SensorResponse(Temp(4))
    Loop
  EndSequence

EndProg
```

CRBasic Example 55. Using Alternate Concurrent Command (aC)

```
'This program example demonstrates the use of the special SDI-12 concurrent measurement
'command (aC) when back-to-back measurements are not desired, as can occur in an application
'that has a tight power budget.  To make full use of the aC command, measurement control
'logic is used.

'Declare variables
Dim X
Public RunSDI12
Public Cmd(4)
Public Temp_Tmp(4)
Public Retry(4)
Public IndDone(4)
Public Temp_Meas(4)
Public GroupDone

'Main Program
BeginProg

'Preset first measurement command to C!
  For X = 1 To 4
    cmd(X) = "C!"
  Next X

  'Set five-second scan rate
  Scan(5,Sec,0,0)

    'Other measurements here

    'Set five-minute SDI-12 measurement rate
    If TimeIntoInterval(0,5,Min) Then RunSDI12 = True

    'Begin measurement sequence
    If RunSDI12 = True Then

      For X = 1 To 4
        Temp_Tmp(X) = 2e9                    'when 2e9 changes, indicates a change
      Next X
```

```
      'Measure SDI-12 sensors
      SDI12Recorder(Temp_Tmp(1),1,0,cmd(1),1.0,0)
      SDI12Recorder(Temp_Tmp(2),1,1,cmd(2),1.0,0)
      SDI12Recorder(Temp_Tmp(3),1,2,cmd(3),1.0,0)
      SDI12Recorder(Temp_Tmp(4),1,3,cmd(4),1.0,0)

      'Control Measurement Event
      For X = 1 To 4
        If cmd(X) = "C!" Then Retry(X) = Retry(X) + 1
        If Retry(X) > 2 Then IndDone(X) = -1

        'Test to see if ttt expired.  If ttt not expired, load "1e9" into first variable
        'then move to next instruction.  If ttt expired, issue aDv! command(s).
        If ((Temp_Tmp(X) = 2e9) OR (Temp_Tmp(X) = 1e9)) Then
          cmd(X) = "C"                        'Start sending "C" command.

        ElseIf(Temp_Tmp(X) = NAN) Then        'Comms failed or sensor not attached
          cmd(X) = "C!"                       'Start measurement over

        Else 'C!/C command sequence complete
          Move(Temp_Meas(X),1,Temp_Tmp(X),1) 'Copy measurements to SDI_Val(10)
          cmd(X) = "C!"                       'Start next measurement with "C!"
          IndDone(X) = -1
        EndIf
      Next X

      'Summarize Measurement Event Success
      For X = 1 To 4
        GroupDone = GroupDone + IndDone(X)
      Next X

      'Stop current measurement event, reset controls
      If GroupDone = -4 Then
        RunSDI12 = False
        GroupDone = 0
        For X = 1 To 4
          IndDone(X) = 0
          Retry(X) = 0
        Next X
      Else
        GroupDone = 0
      EndIf
    EndIf                                     'End of measurement sequence

  NextScan

EndProg
```

SDI12Recorder() sends any string enclosed in quotation marks in the ***Command*** parameter. If the command string is a non-standard SDI-12 command, any response is captured into the variable assigned to the ***Destination*** parameter, so long as that variable is declared **As String**. CRBasic example *Use of an SDI-12 Extended Command* (p. 272) shows appropriate code for sending an extended SDI-12 command and receiving the response. The extended command feature has no built-in provision for responding with follow-up commands. However, the program can be coded to parse the response and issue subsequent SDI-12 commands based on a customized evaluation of the response. For more information on parsing strings, see *Input Programming Basics* (p. 244).

CRBasic Example 56. Using an SDI-12 Extended Command

```
'This program example demonstrates the use of SDI-12 extended commands.  In this example,
'a temperature measurement, tt.tt, is sent to a CH200 Charging Regulator using the command
'XTtt.tt!'.  The response from the CH200 should be 'OOK', if 0 is the SDI-12 address.
'
'Declare Variables
Public PTemp As Float
Public SDI12command As String
Public SDI12result As String

'Main Program
BeginProg
  Scan(20,Sec,3,0)
    PanelTemp(PTemp,250)
    SDI12command = "XT" & FormatFloat(PTemp,"%4.2f") & "!"
    SDI12Recorder(SDI12result,1,0,SDI12command,1.0,0)
  NextScan
EndProg
```

7.9.17.3 SDI-12 Sensor Mode

The CR800 can be programmed to act as an SDI-12 recording device or as an SDI-12 sensor.

For troubleshooting purposes, responses to SDI-12 commands can be captured in programmed mode by placing a variable declared **As String** in the variable parameter. Variables not declared **As String** will capture only numeric data.

Another troubleshooting tool is the terminal-mode snoop utility, which allows monitoring of SDI-12 traffic. Enter terminal mode as described in *SDI-12 Transparent Mode* *(p. 260),* issue CRLF (**<Enter>** key) until CR800> prompt appears. Type **W** and then **<Enter>**. Type **9** in answer to **Select:**, **100** in answer to **Enter timeout (secs):**, **Y** to **ASCII (Y)?**. SDI-12 communications are then opened for viewing.

The **SDI12SensorSetup()** / **SDI12SensorResponse()** instruction pair programs the CR800 to behave as an SDI-12 sensor. A common use of this feature is the transfer of data from the CR800 to other Campbell Scientific dataloggers over a single-wire interface (terminal configured for SDI-12 to terminal configured for SDI-12), or to transfer data to a third-party SDI-12 recorder.

Details of using the **SDI12SensorSetup()** / **SDI12SensorResponse()** instruction pair can be found in the *CRBasic Editor Help*. Other helpful tips include:

Concerning the ***Reps*** parameter in the **SDI12SensorSetup()**, valid ***Reps*** when expecting an **aMx!** command range from 0 to 9. Valid ***Reps*** when expecting an **aCx!** command are 0 to 20. The *Reps* parameter is not range-checked for valid entries at compile time. When the SDI-12 recorder receives the sensor response of **atttn** to a **aMx!** command, or **atttnn** to a **aCx!** command, only the first digit **n**, or the first two digits **nn**, are used. For example, if ***Reps*** is mis-programmed as 123, the SDI-12 recorder will accept only a response of **n** = 1 when issuing an **aMx!** command, or a response of **nn** = 12 when issuing an **aCx!** command.

When programmed as an SDI-12 sensor, the CR800 will respond to SDI-12 commands **M**, **MC**, **C**, **CC**, **R**, **RC**, **V**, **?**, and **I**. See table *SDI-12 Commands for*

Transparent Mode (p. 262) for full command syntax. The following rules apply:

1. A CR800 can be assigned only one SDI-12 address per SDI-12 port. For example, a CR800 will not respond to both **0M!** AND **1M!** on SDI-12 port **C1**. However, different SDI-12 ports can have unique SDI-12 addresses. Use a separate **SlowSequence** for each SDI-12 port configured as a sensor.
2. The CR800 will handle additional measurement (**aMx!**) commands. When an SDI-12 recorder issues **aMx!** commands as shown in CRBasic example *SDI-12 Sensor Setup* (p. 273), measurement results are returned as listed in table *SDI-12 Sensor Setup — Results* (p. 274).

CRBasic Example 57. SDI-12 Sensor Setup

```
'This program example demonstrates the use of the SDI12SensorSetup()/SDI12SensorResponse()
'instruction pair to program the CR800 to emulate an SDI-12 sensor.  A common use of this
'feature is the transfer of data from the CR800 to SDI-12 compatible instruments, including
'other Campbell Scientific dataloggers, over a single-wire interface (SDI-12 port to
'SDI-12 port).  The recording datalogger simply requests the data using the aD0! command.

Public PanelTemp
Public Batt_volt
Public SDI_Source(10)

BeginProg
  Scan(5,Sec,0,0)

    PanelTemp(PanelTemp,250)
    Battery(batt_volt)

    SDI_Source(1)  = PanelTemp              'temperature, degrees C
    SDI_Source(2)  = batt_volt              'primary power, volts dc
    SDI_Source(3)  = PanelTemp * 1.8 + 32   'temperature, degrees F
    SDI_Source(4)  = batt_volt              'primary power, volts dc
    SDI_Source(5)  = PanelTemp              'temperature, degrees C
    SDI_Source(6)  = batt_volt * 1000       'primary power, millivolts dc
    SDI_Source(7)  = PanelTemp * 1.8 + 32   'temperature in degrees F
    SDI_Source(8)  = batt_volt * 1000       'primary power, millivolts dc
    SDI_Source(9)  = Status.SerialNumber    'serial number
    SDI_Source(10) = Status.LithiumBattery  'data backup battery, V

NextScan

  SlowSequence

    Do
      SDI12SensorSetup(10,1,0,1)
      Delay(1,500,mSec)
      SDI12SensorResponse(SDI_Source)
    Loop

  EndSequence
EndProg
```

Table 44. SDI-12 Sensor Setup CRBasic Example — Results		
Measurement Command from SDI-12 Recorder	***Source Variables Accessed from the CR800 acting as a SDI-12 Sensor***	***Contents of Source Variables***
0M!	***Source(1)***, ***Source(2)***	temperature °C, battery voltage
0M0!	Same as ***0M!***	
0M1!	***Source(3)***, ***Source(4)***	temperature °F, battery voltage
0M2!	***Source(5)***, ***Source(6)***	temperature °C, battery mV
0M3!	***Source(7)***, ***Source(8)***	temperature °F, battery mV
0M4!	***Source(9)***, ***Source(10)***	serial number, lithium battery voltage

7.9.17.4 SDI-12 Power Considerations

When a command is sent by the CR800 to an SDI-12 probe, all probes on the same SDI-12 port will wake up. However, only the probe addressed by the datalogger will respond. All other probes will remain active until the timeout period expires.

Example:

Probe: Water Content

Power Usage:

- Quiescent: 0.25 mA
- Measurement: 120 mA
- Measurement time: 15 s
- Active: 66 mA
- Timeout: 15 s

Probes 1, 2, 3, and 4 are connected to SDI-12 / control port **C1**.

The time line in table *Example Power Usage Profile for a Network of SDI-12 Probes* (p. 274) shows a 35 second power-usage profile example.

For most applications, total power usage of 318 mA for 15 seconds is not excessive, but if 16 probes were wired to the same SDI-12 port, the resulting power draw would be excessive. Spreading sensors over several SDI-12 terminals will help reduce power consumption.

Table 45. Example Power Usage Profile for a Network of SDI-12 Probes								
Time (s)	***Command***	***All Probes Awake***	***Time Out Expires***	***1 mA***	***2 mA***	***3 mA***	***4 mA***	***Total mA***
1	***1M!***	Yes		120	66	66	66	318
2				120	66	66	66	318
•				•	•	•	•	•
•				•	•	•	•	•

Table 45. Example Power Usage Profile for a Network of SDI-12 Probes

Time (s)	Command	All Probes Awake	Time Out Expires	1 mA	2 mA	3 mA	4 mA	Total mA
•				•	•	•	•	•
14				120	66	66	66	318
15			Yes	120	66	66	66	318
16	***1D0!***	Yes		66	66	66	66	264
17				66	66	66	66	264
•				•	•	•	•	•
•				•	•	•	•	•
•				•	•	•	•	•
29				66	66	66	66	264
30			Yes	66	66	66	66	264
31				0.25	0.25	0.25	0.25	1
•				•	•	•	•	•
•				•	•	•	•	•
•				•	•	•	•	•
35				0.25	0.25	0.25	0.25	1

7.9.18 String Operations

String operations are performed using CRBasic string functions, as listed in *String Functions* (p. 548).

7.9.18.1 String Operators

The table *String Operators* (p. 275) lists and describes available string operators. String operators are case sensitive.

Table 46. String Operators

Operator	Description
&	Concatenates strings. Forces numeric values to strings before concatenation. Example `1 & 2 & 3 & "a" & 5 & 6 & 7 = "123a567"`
+	Adds numeric values until a string is encountered. When a string is encountered, it is appended to the sum of the numeric values. Subsequent numeric values are appended as strings. Example: `1 + 2 + 3 + "a" + 5 + 6 + 7 = "6a567"`

Table 46. String Operators

Operator	Description

-	"Subtracts" NULL ("") from the end of ASCII characters for conversion to an ASCII code (LONG data type).
	Example:
	`"a" - "" = 97`
	
	ASCII codes of the first characters in each string are compared. If the difference between the codes is zero, codes for the next characters are compared. When unequal codes or NULL are encountered (NULL terminates all strings), the difference between the last compared ASCII codes is returned.
	Examples:
	Note — ASCII code for a = 97, b = 98, c = 99, d = 100, e = 101, and all strings end with NULL.
	Difference between **NULL** and **NULL**
	`"abc" - "abc" = 0`
	Difference between **e** and **c**
	`"abe" - "abc" = 2`
	Difference between **c** and **b**
	`"ace" - "abe" = 1`
	Difference between **d** and **NULL**
	`"abcd" - "abc" = 100`

<, >, <>, <=, >=, =	ASCII codes of the first characters in each string are compared. If the difference between the codes is zero, codes for the next characters are compared. When unequal codes or NULL are encountered (NULL terminates all strings), the requested comparison is made. If the comparison is true, **-1** or **True** is returned. If false, **0** or **False** is returned.
	Examples:
	Expression / **Result**
	`x = "abc" = "abc"` — `x = -1 or True`
	`x = "abe" = "abc"` — `x = 0 or False`
	`x = "ace" > "abe"` — `x = -1 or True`

7.9.18.2 String Concatenation

Concatenation is the building of strings from other strings ("abc123"), characters ("a" or **chr()**), numbers, or variables. The table *String Concatenation Examples* (p. 276) lists some expressions and expected results. CRBasic example *Concatenation of Numbers and Strings* (p. 277) demonstrates several concatenation examples.

When non-string values are concatenated with strings, once a string is encountered, all subsequent operands will first be converted to a string before the + operation is performed. When working with strings, exclusive use of the & operator ensures that no string value will be converted to an integer.

Table 47. String Concatenation Examples

Expression	Comments	Result
`Str(1) = 5.4 + 3 + " Volts"`	Add floats, concatenate strings	`"8.4 Volts"`
`Str(2) = 5.4 & 3 & " Volts"`	Concatenate floats and strings	`"5.43 Volts"`
`Lng(1) = "123"`	Convert string to long	`123`
`Lng(2) = 1+2+"3"`	Add floats to string / convert to long	`33`
`Lng(3) = "1"+2+3`	Concatenate string and floats	`123`
`Lng(4) = 1&2&"3"`	Concatenate floats and string	`123`

CRBasic Example 58. Concatenation of Numbers and Strings

```
'This program example demonstrates the concatenation of numbers and strings to variables
'declared As Float and As String.
'
'Declare Variables
Public Num(12) As Float
Public Str(2) As String
Dim I

BeginProg
  Scan(1,Sec,0,0)

    I = 0 'Set I to zero

    'Data type of the following destination variables is Float
    'because Num() array is declared As Float.
    I += 1 'Increment I by 1 to clock through sequential elements of the Num() array

    'As shown in the following expression, if all parameter are numbers, the result
    'of using '+' is a sum of the numbers:
    Num(I) = 2 + 3 + 4                        '= 9

    'Following are examples of using '+' and '*' when one or more parameters are strings.
    'Parameters are processed in the standard order of operations. In the order of
    'operation, once a string or an '&' is processed, all following parameters will
    'be processed (concatenated) as strings:
    I += 1
    Num(I) = "1" + 2 + 3 + 4                  '= 1234
    I += 1
    Num(I) = 1 + "2" + 3 + 4                  '= 1234
    I += 1
    Num(I) = 1 + 2 + "3" + 4                  '= 334
    I += 1
    Num(I) = 1 + 2 + 3 + "4"                  '= 64
```

```
    I += 1
    Num(I) = 1 + 2 + "3" + 4 + 5 + "6"       '= 33456
    I += 1
    Num(I) = 1 + 2 + "3" + (4 + 5) + "6"     '= 3396
    I += 1
    Num(I) = 1 + 2 + "3" + 4 * 5 + "6"       '= 33206
    I += 1
    Num(I) = 1 & 2 + 3 + 4                   '= 1234
    I += 1
    Num(I) = 1 + 2 + 3 & 4                   '= 64

    'If a non-numeric string is attempted to be processed into a float destination,
    'operations are truncated at that point
    I += 1
    Num(I) = 1 + 2 + "hey" + 4 + 5 + "6"     '= 3
    I += 1
    Num(I) = 1 + 2 + "hey" + (4 + 5) + "6"   '= 3

    'The same rules apply when the destination is of data type String, except in the
    'case wherein a non-numeric string is encountered as follows.  Data type of the
    'following destination variables is String because Str() array is declared As String.
    I = 0

    I += 1
    Str(I) = 1 + 2 + "hey" + 4 + 5 + "6"     '= 3hey456
    I += 1
    Str(I) = 1 + 2 + "hey" + (4 + 5) + "6"   '= 3hey96

  NextScan
EndProg
```

7.9.18.3 String NULL Character

All strings are automatically NULL terminated. NULL is the same as **Chr(**0**)** or "", counts as one of the characters in the string. Assignment of just one character is that character followed by a NULL, unless the character is a NULL.

Table 48. String NULL Character Examples

Expression	*Comments*	*Result*
`LongVar(5) = "#"-""`	Subtract NULL, ASCII code results	35
`LongVar(6) = StrComp("#","")`	Also subtracts NULL	35

Example:

Objective:

Insert a NULL character into a string, and then reconstitute the string.

Given:

```
StringVar(3) = "123456789"
```

Execute:

```
StringVar(3,1,4) = ""                "123<NULL>56789"
```

Results:

```
StringVar(4) = StringVar(3)          "123"
```

but,

```
StringVar(3) still = "123<NULL>56789",
```

so,

```
StringVar(5) = StringVar(3,1,4+1)
'"56789"
StringVar(6) = StringVar(3) + 4 + StringVar(3,1,4+1)
'"123456789"
```

Some smart sensors send strings containing NULL characters. To manipulate a string that has NULL characters within it (in addition to being terminated with another NULL), use **MoveBytes()** instruction.

7.9.18.4 Inserting String Characters

Example:

Objective:

Use **MoveBytes()** to change **"123456789"** to **"123A56789"**

Given:

```
StringVar(7) = "123456789"                          'Result is
"123456789"
```

try (does not work):

```
StringVar(7,1,4) = "A"                              'Result is
"123A<NULL>56789"
```

Instead, use:

```
StringVar(7) = MoveBytes(Strings(7,1,4),0,"A",0,1)  'Result is
"123A56789"
```

7.9.18.5 Extracting String Characters

A specific character in the string can be accessed by using the "dimensional" syntax; that is, when the third dimension of a string is specified, the third dimension is the character position.

Table 49. Extracting String Characters

Expression	*Comments*	*Result*
`StringVar(3) = "Go Jazz"`	Loads string into variable	`StringVar(3) = "Go Jazz"`
`StringVar(4) = StringVar(3,1,4)`	Extracts single character	`StringVar(4) = "J"`

7.9.18.6 String Use of ASCII / ANSII Codes

Table 50. Use of ASCII / ANSII Codes Examples

Expression	*Comments*	*Result*
`LongVar (7) = ASCII("#")`		35
`LongVar (8) = ASCII("*")`		42

Table 50. Use of ASCII / ANSII Codes Examples		
Expression	***Comments***	***Result***
`LongVar (9) = "#"`	Cannot be converted to Long with NULL	NAN
`LongVar (1) = "#"-""`	Can be converted to Long without NULL	35

7.9.18.7 Formatting Strings

Table 51. Formatting Strings Examples	
Expression	***Result***
`Str(1)=123e4`	1230000
`Str(2)=FormatFloat(123e4,"%12.2f")`	1230000.00
`Str(3)=FormatFloat(Values(2),"  The battery is %.3g Volts  ")`	"The battery is 12.4 Volts"
`Str(4)=Strings(3,1,InStr(1,Strings(3),"The battery is ",4))`	12.4 Volts
`Str(5)=Strings(3,1,InStr(1,Strings(3),"is ",2) + 3)`	12.4 Volts
`Str(6)=Replace("The battery is 12.4 Volts"," is "," = ")`	The battery = 12.4 Volts
`Str(7)=LTrim("The battery is 12.4 Volts")`	The battery is 12.4 Volts
`Str(8)=RTrim("The battery is 12.4 Volts")`	The battery is 12.4 Volts
`Str(9)=Trim("The battery is 12.4 Volts")`	The battery is 12.4 Volts
`Str(10)=UpperCase("The battery is 12.4 Volts")`	THE BATTERY IS 12.4 VOLTS
`Str(12)=Left("The battery is 12.4 Volts",5)`	The b
`Str(13)=Right("The battery is 12.4 Volts",7)`	Volts

CRBasic Example 59. Formatting Strings

```
'This program example demonstrates the formatting of string variables.  To run the
'demonstration, send this program to the CR800.  String formatting will occur
'automatically.

'Objective:
'Extract "12.4 Volts" from the string "The battery is 12.4 Volts"

Public StringVar As String

BeginProg
  'Note line continuation character _
  StringVar() = Mid("The battery is 12.4 Volts", _
  InStr(1,"The battery is 12.4 Volts"," is ",2)+3,Len("The battery is 12.4 Volts"))
EndProg
```

7.9.18.8 Formatting String Hexadecimal Variables

Table 52. Formatting Hexadecimal Variables — Examples		
Expression	***Comment***	***Result***
`CRLFNumeric(1) = &H0d0a`	Add leading zero to hex step 1	3338
`StringVar(20) = "0" & Hex(CRLFNumeric)`	Add leading zero to hex step 2	0D0A
`CRLFNumeric(2) = HexToDec(Strings(20))`	Convert Hex string to Float	3338.00

7.9.19 Subroutines

A subroutine is a group of programming instructions that is called by, but runs outside of, the main program. Subroutines are used for the following reasons:

- To reduce program length. Subroutine code can be executed multiple times in a program scan.
- To ease integration of proven code segments into new programs.
- To compartmentalize programs to improve organization.

By executing the **Call()** instruction, the main program can call a subroutine from anywhere in the program.

A subroutine has access to all *global variables* (p. 490). Variables *local* (p. 493) to a subroutine are declared within the subroutine instruction. Local variables can be aliased (as of 4/2013; OS 26) but are not displayed in the **Public** table. Global and local variables can share the same name and not conflict. If global variables are passed to local variables of different type, the same type conversion rules apply as apply to conversions among variables declared as **Public** or **Dim**. See *Expressions with Numeric Data Types* (p. 160) for conversion types.

Note To avoid programming conflicts, pass information into local variables and / or define some global variables and use them exclusively by a subroutine.

CRBasic example *Subroutine with Global and Local Variables* (p. 281) shows the use of global and local variables. Variables **counter()** and ***pi_product*** are global. Variable ***i_sub*** is global but used exclusively by subroutine ***process***. Variables **j()** and ***OutVar*** are local since they are declared as parameters in the **Sub()** instruction,

```
Sub process(j(4) AS Long,OutVar).
```

Variable **j()** is a four-element array and variable **OutVar** is a single-element array. The call statement,

```
Call ProcessSub (counter(1),pi_product)
```

passes five values into the subroutine: **pi_product** and four elements of array **counter()**. Array **counter()** is used to pass values into, and extract values from, the subroutine. The variable **pi_product** is used to extract a value from the subroutine.

Call() passes the values of all listed variables into the subroutine. Values are passed back to the main scan at the end of the subroutine.

CRBasic Example 60. Subroutine with Global and Local Variables

```
'This program example demonstrates the use of global and local variables with subroutines.
'
'Global variables are those declared anywhere in the program as Public or Dim.
'Local variables are those declared in the Sub() instruction.

'Program Function: Passes two variables to a subroutine. The subroutine increments each
'variable once per second, multiplies each by pi, then passes results back to the main
'program for storage in a data table.
```

```
'Global variables (Used only outside subroutine by choice)
'Declare Counter in the Main Scan.
Public counter(2) As Long

'Declare Product of PI * counter(2).
Public pi_product(2) As Float

'Global variable (Used only in subroutine by choice)
'For / Next incrementor used in the subroutine.
Public i_sub As Long

'Declare Data Table
DataTable(pi_results,True,-1)
  Sample(1,counter(),IEEE4)
EndTable

'Declare Subroutine
'Declares j(4) as local array (can only be used in subroutine)
Sub ProcessSub (j(2) As Long,OutVar(2) As Float)
  For i_sub = 1 To 2
    j(i_sub) = j(i_sub) + 1
    'Processing to show functionality
    OutVar(i_sub) = j(i_sub) * 4 * ATN(1)    '(Tip: 4 * ATN(1) = pi to IEEE4 precision)
  Next i_sub
EndSub

BeginProg
  counter(1) = 1
  counter(2) = 2
  Scan(1,Sec,0,0)

  'Pass Counter() array to j() array, pi_pruduct() to OutVar()
    Call ProcessSub (counter(),pi_product())
    CallTable pi_results

  NextScan
EndProg
```

7.9.20 TCP/IP — Details

Related Topics:
- *TCP/IP — Overview* (p. 90)
- *TCP/IP — Details* (p. 402)
- *TCP/IP — Instructions* (p. 567)
- *TCP/IP Links — List* (p. 629)

The following TCP/IP protocols are supported by the CR800 when using *network-links* (p. 629) that use the resident IP stack or when using a cell modem with the PPP/IP key enabled. More information on some of these protocols is in the following sections.

- DHCP
- DNS
- FTP
- HTML
- HTTP

-
- Micro-serial server
- NTCIP
- NTP
- PakBus over TCP/IP
- Ping
- POP3
- SMTP
- SNMP
- Telnet
- *Web API* (p. 402)
- XML

The most up-to-date information on implementing these protocols is contained in *CRBasic Editor Help*. For a list of CRBasic instructions, see the appendix *TCP/IP* (p. 567).

Read More Specific information concerning the use of digital-cellular modems for TCP/IP can be found in Campbell Scientific manuals for those modems. For information on available TCP/IP/PPP devices, refer to the appendix *Network Links* (p. 629) for model numbers. Detailed information on use of TCP/IP/PPP devices is found in their respective manuals (available at *www.campbellsci.com http://www.campbellsci.com*) and *CRBasic Editor Help*.

7.9.20.1 PakBus Over TCP/IP and Callback

Once the hardware has been configured, basic PakBus® communication over TCP/IP is possible. These functions include the following:

- Sending programs
- Retrieving programs
- Setting the CR800 clock
- Collecting data
- Displaying the current record in a data table

Data callback and datalogger-to-datalogger communications are also possible over TCP/IP. For details and example programs for callback and datalogger-to-datalogger communications, see the network-link manual. A listing of network-link model numbers is found in the appendix *Network Links* (p. 629).

7.9.20.2 Default HTTP Web Server

The CR800 has a default home page built into the operating system. The home page can be accessed using the following URL:

```
http:\\ipaddress:80
```

Note Port 80 is implied if the port is not otherwise specified.

As shown in the figure, *Preconfigured HTML Home Page* (p. 284), this page provides links to the newest record in all tables, including the **Status** table, **Public** table, and data tables. Links are also provided for the last 24 records in each data table. If fewer than 24 records have been stored in a data table, the link will display all data in that table.

Newest-Record links refresh automatically every 10 seconds. **Last 24-Records** link must be manually refreshed to see new data. Links will also be created automatically for any HTML, XML, and JPEG files found on the CR800 drives. To copy files to these drives, choose **File Control** from the *datalogger support software* (p. 485) menu.

Figure 73. Preconfigured HTML Home Page

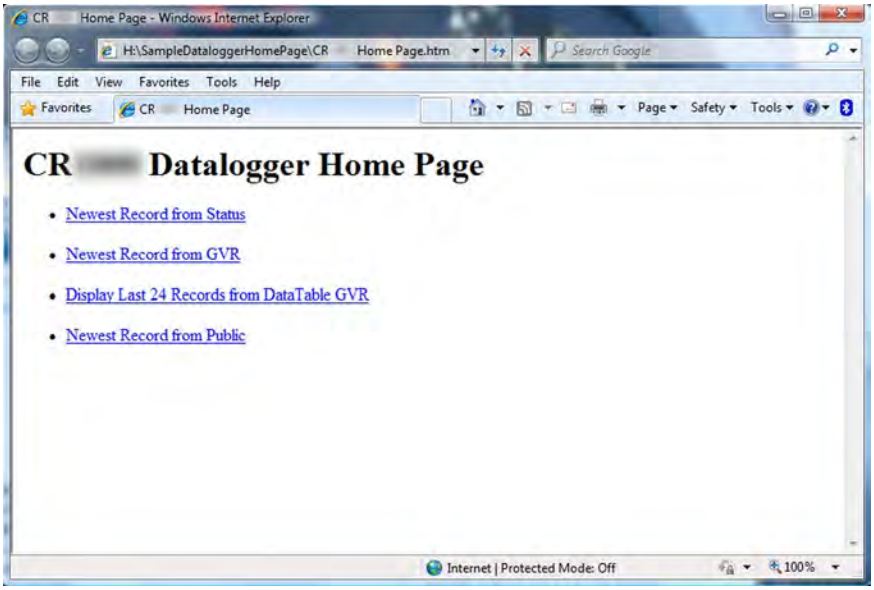

7.9.20.3 Custom HTTP Web Server

Although the default home page cannot be accessed for editing, it can be replaced with the HTML code of a customized web page. To replace the default home page, save the new home page under the name *default.html* and copy it to the datalogger. It can be copied to a CR800 drive with **File Control**. Deleting *default.html* will cause the CR800 to use the original, default home page.

The CR800 can be programmed to generate HTML or XML code that can be viewed by a web browser. CRBasic example *HTML* (p. 286) shows how to use the CRBasic instructions **WebPageBegin()** / **WebPageEnd** and **HTTPOut()** to create HTML code. Note that for HTML code requiring the use of quotation marks, **CHR(34)** is used, while regular quotation marks are used to define the beginning and end of alphanumeric strings inside the parentheses of the **HTTPOut()** instruction. For additional information, see the *CRBasic Editor Help*.

In this example program, the default home page is replaced by using **WebPageBegin** to create a file called default.html. The new default home page created by the program appears as shown in the figure *Home Page Created using WebPageBegin() Instruction* (p. 285).

The Campbell Scientific logo in the web page comes from a file called **SHIELDWEB2.JPG** that must be transferred from the PC to the CR800 CPU: drive using **File Control** in the datalogger support software.

A second web page, shown in figure *Customized Numeric-Monitor Web Page* (p. 285) called "monitor.html" was created by the example program that contains links to the CR800 data tables.

*Figure 74. Home Page Created Using **WebPageBegin()** Instruction*

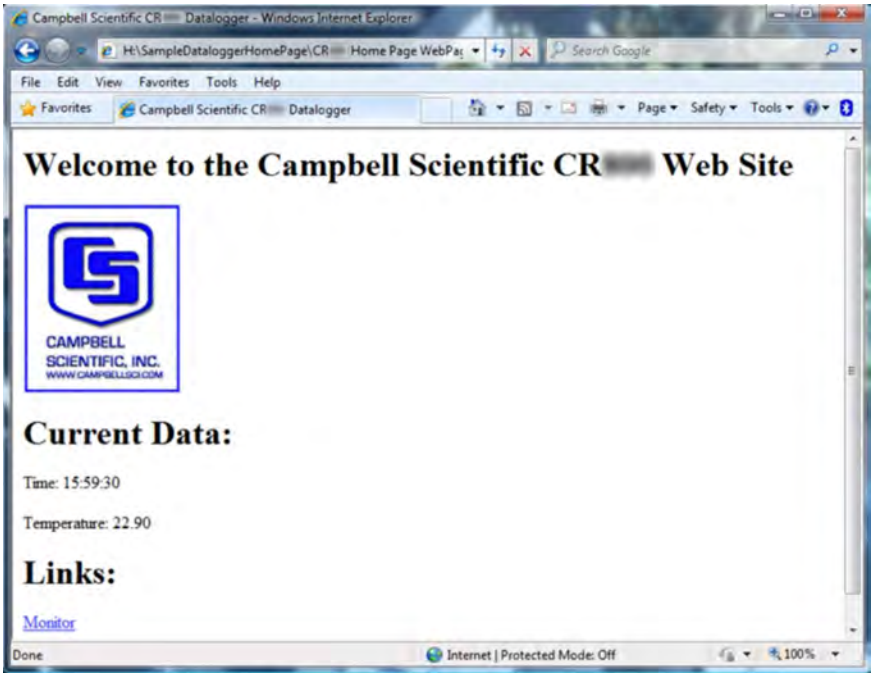

Figure 75. Customized Numeric-Monitor Web Page

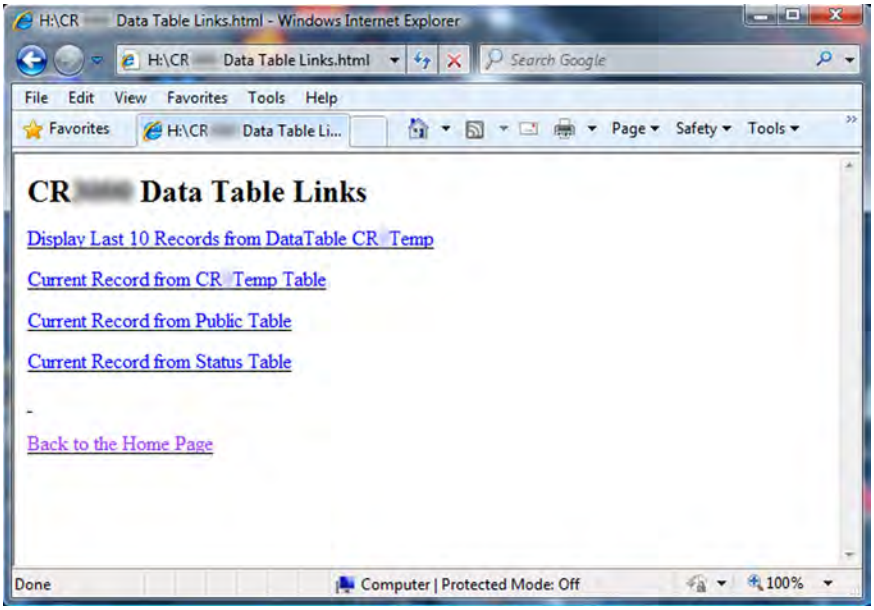

CRBasic Example 61. Custom Web Page HTML

```
'This program example demonstrates the creation of a custom web page that resides in the
'CR800. In this example program, the default home page is replaced by using WebPageBegin to
'create a file called default.html. The graphic in the web page (in this case, the Campbell
'Scientific logo) comes from a file called SHIELDWEB2.JPG. The graphic file must be copied to
'the CR800 CPU: drive using File Control in the datalogger support software.  A second web
'page is created that contains links to the CR800 data tables.

'NOTE: The "_" character used at the end of some lines allows a code statement to be wrapped
'to the next line.

Dim Commands As String * 200
Public Time(9), RefTemp,
Public Minutes As String, Seconds As String, Temperature As String

DataTable(CRTemp,True,-1)
  DataInterval(0,1,Min,10)
  Sample(1,RefTemp,FP2)
  Average(1,RefTemp,FP2,False)
EndTable

'Default HTML Page
WebPageBegin("default.html",Commands)
  HTTPOut("<html>")
  HTTPOut("<style>body {background-color: oldlace}</style>")
  HTTPOut("<body><title>Campbell Scientific CR800 Datalogger</title>")
  HTTPOut("<h2>Welcome To the Campbell Scientific CR800 Web Site!</h2>")
  HTTPOut("<tr><td style=" + CHR(34) +"width: 290px" + CHR(34) + ">")
  HTTPOut("<a href=" + CHR(34) + "http://www.campbellsci.com" + CHR(34) + ">")
  HTTPOut("<img src="+ CHR(34) +"/CPU/SHIELDWEB2.jpg"+ CHR(34) + "width=" + _
    CHR(34) +"128"+CHR(34)+"height="+CHR(34)+"155"+ CHR(34) + "class=" + _
    CHR(34) +"style1"+ CHR(34) +"/></a></td>")
  HTTPOut("<p><h2> Current Data:</h2></p>")
  HTTPOut("<p>Time: " + time(4) + ":" + minutes + ":" + seconds + "</p>")
  HTTPOut("<p>Temperature: " + Temperature + "</p>")
  HTTPOut("<p><h2> Links:</h2></p>")
  HTTPOut("<p><a href="+ CHR(34) +"monitor.html"+ CHR(34)+">Monitor</a></p>")
  HTTPOut("</body>")
  HTTPOut("</html>")
WebPageEnd

'Monitor Web Page
WebPageBegin("monitor.html",Commands)
  HTTPOut("<html>")
  HTTPOut("<style>body {background-color: oldlace}</style>")
  HTTPOut("<body>")
  HTTPOut("<title>Monitor CR800 Datalogger Tables</title>")
  HTTPOut("<p><h2>CR800 Data Table Links</h2></p>")
  HTTPOut("<p><a href="+ CHR(34) + "command=TableDisplay&table=CRTemp&records=10" + _
    CHR(34)+">Display Last 10 Records from DataTable CR1Temp</a></p>")
  HTTPOut("<p><a href="+ CHR(34) + "command=NewestRecord&table=CRTemp"+ CHR(34) + _
    ">Current Record from CRTemp Table</a></p>")
  HTTPOut("<p><a href="+ CHR(34) + "command=NewestRecord&table=Public"+ CHR(34) + _
    ">Current Record from Public Table</a></p>")
```

```
  HTTPOut("<p><a href="+ CHR(34) + "command=NewestRecord&table=Status" + CHR(34) + _
    ">Current Record from Status Table</a></p>")
  HTTPOut("<br><p><a href="+ CHR(34) +"default.html"+ CHR(34) + ">Back to the Home Page _
    </a></p>")
  HTTPOut("</body>")
  HTTPOut("</html>")
WebPageEnd

BeginProg
  Scan(1,Sec,3,0)
    PanelTemp(RefTemp,250)
    RealTime(Time())
    Minutes = FormatFloat(Time(5),"%02.0f")
    Seconds = FormatFloat(Time(6),"%02.0f")
    Temperature = FormatFloat(RefTemp, "%02.02f")
    CallTable(CRTemp)
  NextScan
EndProg
```

7.9.20.4 FTP Server

The CR800 automatically runs an FTP server. This allows *Windows*® *Explorer*® to access the CR800 file system with FTP, with drives on the CR800 being mapped into directories or folders. The root directory on the CR800 can be any drive, but the USR: drive is usually preferred. USR: is a drive created by allocating memory in the **USR: Drive Size** box on the **Deployment** | **Advanced** tab of the CR800 service in *DevConfig*. Files can be copied / pasted between drives. Files can be deleted through FTP.

7.9.20.5 FTP Client

The CR800 can act as an FTP client to send a file or get a file from an FTP server, such as another datalogger or web camera. This is done using the CRBasic **FTPClient()** instruction. Refer to a manual for a Campbell Scientific network link (see the appendix *Network Links* *(p. 629)*), available at *www.campbellsci.com*, or *CRBasic Editor Help* for details and sample programs.

7.9.20.6 Telnet

Telnet is used to access the same commands that are available through the support software *terminal emulator* *(p. 504)*. Start a *Telnet* session by opening a DOS command prompt and type in:

```
Telnet xxx.xxx.xxx.xxx <Enter>
```

where xxx.xxx.xxx.xxx is the IP address of the network device connected to the CR800.

7.9.20.7 SNMP

Simple Network Management Protocol (SNMP) is a part of the IP suite used by NTCIP and RWIS for monitoring road conditions. The CR800 supports SNMP when a network device is attached.

7.9.20.8 Ping (IP)

Ping can be used to verify that the IP address for the network device connected to the CR800 is reachable. To use the Ping tool, open a command prompt on a computer connected to the network and type in:

```
ping xxx.xxx.xxx.xxx <Enter>
```

where xxx.xxx.xxx.xxx is the IP address of the network device connected to the CR800.

7.9.20.9 Micro-Serial Server

The CR800 can be configured to allow serial communication over a TCP/IP port. This is useful when communicating with a serial sensor over Ethernet with micro-serial server (third-party serial to Ethernet interface) to which the serial sensor is connected. See the network-link manual and the *CRBasic Editor Help* for the **TCPOpen()** instruction for more information. Information on available network links is available in the appendix *Network Links* *(p. 629).*

7.9.20.10 Modbus TCP/IP

The CR800 can perform Modbus communication over TCP/IP using the Modbus TCP/IP interface. To set up Modbus TCP/IP, specify port 502 as the ***ComPort*** in the **ModBusMaster()** and **ModBusSlave()** instructions. See the *CRBasic Editor Help* for more information. See *Modbus* *(p. 391).*

7.9.20.11 DHCP

When connected to a server with a list of IP addresses available for assignment, the CR800 will automatically request and obtain an IP address through the Dynamic Host Configuration Protocol (DHCP). Once the address is assigned, use *DevConfig*, *PakBusGraph*, *Connect*, or the CR1000KD Keyboard Display to look in the CR800 **Status** table to see the assigned IP address. This is shown under the field name ***IPInfo***.

7.9.20.12 DNS

The CR800 provides a Domain Name Server (DNS) client that can query a DNS server to determine if an IP address has been mapped to a hostname. If it has, then the hostname can be used interchangeably with the IP address in some datalogger instructions.

7.9.20.13 SMTP

Simple Mail Transfer Protocol (SMTP) is the standard for e-mail transmissions. The CR800 can be programmed to send e-mail messages on a regular schedule or based on the occurrence of an event.

7.9.21 Wind Vector

The **WindVector()** instruction processes wind-speed and direction measurements to calculate mean speed, mean vector magnitude, and mean vector direction over a data-storage interval. Measurements from polar (wind speed and direction) or

orthogonal (fixed East and North propellers) sensors are supported. Vector direction and standard deviation of vector direction can be calculated weighted or unweighted for wind speed.

7.9.21.1 OutputOpt Parameters

In the CR800 **WindVector()** instruction, the ***OutputOpt*** parameter defines the processed data that are stored. All output options result in an array of values, the elements of which have **_WVc(n)** as a suffix, where **n** is the element number. The array uses the name of the ***Speed/East*** variable as its base. Table *OutputOpt Options* (p. 289) lists and describes ***OutputOpt*** options.

Table 53. WindVector() OutputOpt Options

Option	*Description (WVc() is the Output Array)*
0	WVc(1): Mean horizontal wind speed (S) WVc(2): Unit vector mean wind direction (Θ1) WVc(3): Standard deviation of wind direction σ(Θ1). Standard deviation is calculated using the Yamartino algorithm. This option complies with EPA guidelines for use with straight-line Gaussian dispersion models to model plume transport.
1	WVc(1): Mean horizontal wind speed (S) WVc(2): Unit vector mean wind direction (Θ1)
2	WVc(1): Mean horizontal wind speed (S) WVc(2): Resultant mean horizontal wind speed (U) WVc(3): Resultant mean wind direction (Θu) WVc(4): Standard deviation of wind direction σ(Θu). This standard deviation is calculated using Campbell Scientific's wind speed weighted algorithm. Use of the resultant mean horizontal wind direction is not recommended for straight-line Gaussian dispersion models, but may be used to model transport direction in a variable-trajectory model.
3	WVc(1): Unit vector mean wind direction (Θ1)
4	WVc(1): Unit vector mean wind direction (Θ1) WVc(2): Standard deviation of wind direction σ(Θu). This standard deviation is calculated using Campbell Scientific's wind speed weighted algorithm. Use of the resultant mean horizontal wind direction is not recommended for straight-line Gaussian dispersion models, but may be used to model transport direction in a variable-trajectory model.

7.9.21.2 Wind Vector Processing

WindVector() uses a zero-wind-speed measurement when processing scalar wind speed only. Because vectors require magnitude and direction, measurements at zero wind speed are not used in vector speed or direction calculations. This means, for example, that manually-computed hourly vector directions from 15 minute vector directions will not agree with CR800-computed hourly vector directions. Correct manual calculation of hourly vector direction from 15 minute vector directions requires proper weighting of the 15 minute vector directions by the number of valid (non-zero wind speed) wind direction samples.

Note Cup anemometers typically have a mechanical offset which is added to each measurement. A numeric offset is usually encoded in the CRBasic program to compensate for the mechanical offset. When this is done, a measurement will

equal the offset only when wind speed is zero; consequently, additional code is often included to zero the measurement when it equals the offset so that **WindVector()** can reject measurements when wind speed is zero.

Standard deviation can be processed one of two ways: 1) using every sample taken during the data storage interval (enter ***0*** for the ***Subinterval*** parameter), or 2) by averaging standard deviations processed from shorter sub-intervals of the data-storage interval. Averaging sub-interval standard deviations minimizes the effects of meander under light wind conditions, and it provides more complete information for periods of transition (see EPA publication "On-site Meteorological Program Guidance for Regulatory Modeling Applications").

Standard deviation of horizontal wind fluctuations from sub-intervals is calculated as follows:

$$\sigma(\Theta) = [((\sigma\Theta_1)^2 + (\sigma\Theta_2)^2 \ldots + (\sigma\Theta_M)^2) / M]^{1/2}$$

where: $\sigma(\Theta)$ is the standard deviation over the data-storage interval, and $\sigma\Theta_1 \ldots \sigma\Theta_M$ are sub-interval standard deviations. A sub-interval is specified as a number of scans. The number of scans for a sub-interval is given by:

Desired sub-interval (secs) / scan rate (secs)

For example, if the scan rate is 1 second and the data-output interval is 60 minutes, the standard deviation is calculated from all 3600 scans when the sub-interval is 0. With a sub-interval of 900 scans (15 minutes) the standard deviation is the average of the four sub-interval standard deviations. The last sub-interval is weighted if it does not contain the specified number of scans.

The EPA recommends hourly standard deviation of horizontal wind direction (sigma theta) be computed from four fifteen-minute sub-intervals.

7.9.21.2.1 Measured Raw Data

- S_i: horizontal wind speed
- Θ_i: horizontal wind direction
- Ue_i: east-west component of wind
- Un_i: north-south component of wind
- N: number of samples

7.9.21.2.2 Calculations

Input Sample Vectors

Figure 76. Input Sample Vectors

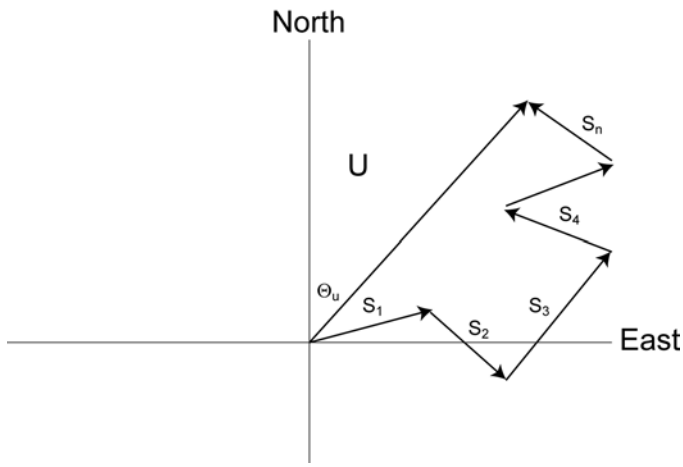

In figure *Input Sample Vectors* (p. 291), the short, head-to-tail vectors are the input sample vectors described by s_i and Θ_i, the sample speed and direction, or by Ue_i and Un_i, the east and north components of the sample vector. At the end of data-storage interval T, the sum of the sample vectors is described by a vector of magnitude U and direction Θu. If the input sample interval is t, the number of samples in data-storage interval *T* is $N = T / t$. The mean vector magnitude is $\bar{U} = U / N$.

Scalar mean horizontal wind speed, S:

$$S = (\sum s_i) / N$$

where in the case of orthogonal sensors:

$$s_i = (Ue_i^2 + Un_i^2)^{1/2}$$

Unit vector mean wind direction,

$$\Theta_1 = \arctan (Ux / Uy)$$

where

$$Ux = (\sum \sin \Theta_i) / N$$

$$Uy = (\sum \cos \Theta_i) / N$$

or, in the case of orthogonal sensors

$$Ux = (\sum (Ue_i / U_i) / N$$

$$Uy = (\sum (Un_i / U_i) / N$$

where

$$U_i = (Ue_i^2 + Un_i^2)^{1/2}$$

Standard deviation of wind direction (Yamartino algorithm)

$$\sigma(\Theta_1) = \arcsin(\varepsilon)[1 + 0.1547\varepsilon^3]$$

where,

$$\varepsilon = [1 - ((Ux)^2 + (Uy)^2)]^{1/2}$$

and Ux and Uy are as defined above.

Mean Wind Vector

Resultant mean horizontal wind speed, $\bar{U}$:

$$\overline{U} = (Ue^2 + Un^2)^{1/2}$$

Figure 77. Mean Wind-Vector Graph

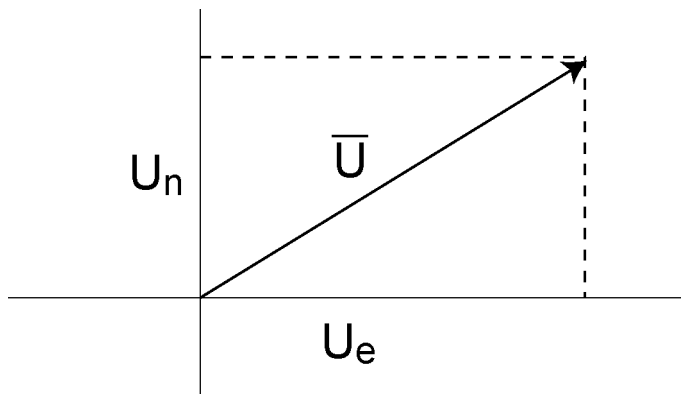

where for polar sensors:

$$Ue = (\sum s_i \sin \Theta_i) / N$$

$$Un = (\sum s_i \cos \Theta_i) / N$$

or, in the case of orthogonal sensors:

$$Ue = (\sum Ue_i) / N$$

$$Un = (\sum Un_i) / N$$

Resultant mean wind direction, Θu:

$$\Theta u = \arctan (Ue / Un)$$

Standard deviation of wind direction, σ (Θu), using Campbell Scientific algorithm:

$$\sigma(\Theta u) = 81(1 - \overline{U} / S)^{1/2}$$

The algorithm for σ (Θu) is developed by noting, as shown in the figure *Standard Deviation of Direction* (p. 293), that

$$\cos(\Theta_i') = U_i / s_i$$

where

$$\Theta_i' = \Theta_i - \Theta u$$

Standard Deviation of Direction

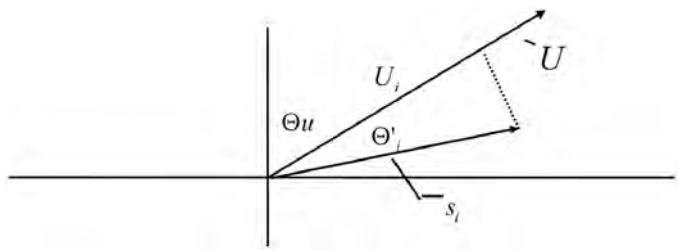

Figure 78. Standard Deviation of Direction

The Taylor Series for the Cosine function, truncated after 2 terms is:

$$\cos(\Theta_i') \cong 1 - (\Theta_i')^2 / 2$$

For deviations less than 40 degrees, the error in this approximation is less than 1%. At deviations of 60 degrees, the error is 10%.

The speed sample can be expressed as the deviation about the mean speed,

$$s_i = s_i' + S$$

Equating the two expressions for Cos (θ') and using the previous equation for s_i;

$$1 - (\Theta_i')^2 / 2 = U_i / (s_i' + S)$$

Solving for $(\Theta_i')^2$, one obtains;

$$(\Theta_i')^2 = 2 - 2U_i / S - (\Theta_i')^2 s_i' / S + 2s_i' / S$$

Summing $(\Theta_i')^2$ over N samples and dividing by N yields the variance of Θu.

Note The sum of the last term equals 0.

$$(\sigma(\Theta u))^2 = (\sum_{i=1}^{N}(\Theta_i')^2 / N) = 2(1 - \overline{U} / S) - \sum_{i=1}^{N}((\Theta_i)^2 s_i') / NS$$

The term,

$$\sum((\Theta_i')^2 s_i') / NS$$

is 0 if the deviations in speed are not correlated with the deviation in direction. This assumption has been verified in tests on wind data by Campbell Scientific;

the Air Resources Laboratory, NOAA, Idaho Falls, ID; and MERDI, Butte, MT. In these tests, the maximum differences in

$$\sigma(\Theta u) = (\sum(\Theta_i')^2 / N)^{1/2}$$

and

$$\sigma(\Theta u) = (2\ (1 - \overline{U} / S))^{1/2}$$

have never been greater than a few degrees.

The final form is arrived at by converting from radians to degrees (57.296 degrees/radian).

$$\sigma(\Theta u) = (2\ (1 - \overline{U} / S)^{1/2} = 81\ (1 - \overline{U} / S)^{1/2}$$

8. Operation

Related Topics
- *Quickstart* (p. 41)
- *Specifications* (p. 95)
- *Installation* (p. 97)
- *Operation* (p. 295)

8.1 Measurements — Details

Related Topics:
- *Sensors — Quickstart* (p. 42)
- *Measurements — Overview* (p. 62)
- *Measurements — Details* (p. 295)
- *Sensors — Lists* (p. 626)

Several features give the CR800 the flexibility to measure most sensor types. Contact a Campbell Scientific application engineer if assistance is required in assessing CR800 compatibility to a specific application or sensor type. Some sensors require precision excitation or a source of power. See the section *Switched Voltage Output — Details* (p. 101).

8.1.1 Time Keeping — Details

Related Topics:
- *Time Keeping — Overview* (p. 75)
- *Time Keeping — Details* (p. 295)

Measurement of time is an essential function of the CR800. Time measurement with the on-board clock enables the CR800 to attach time stamps to data, measure the interval between events, and time the initiation of control functions.

8.1.1.1 Time Stamps

A measurement without an accurate time reference has little meaning. Data on the CR800 are stored with time stamps. How closely a time stamp corresponds to the actual time a measurement is taken depends on several factors.

The time stamp in common CRBasic programs matches the time at the beginning of the current scan as measured by the real-time clock in the CR800. If a scan starts at 15:00:00, data output during that scan will have a time stamp of **15:00:00** regardless of the length of the scan or when in the scan a measurement is made. The possibility exists that a scan will run for some time before a measurement is made. For instance, a scan may start at 15:00:00, execute time-consuming code, then make a measurement at 15:00:00.51. The time stamp attached to the measurement, if the **CallTable()** instruction is called from within the **Scan() / NextScan** construct, will be **15:00:00**, resulting in a time-stamp skew of 510 ms.

Time-stamp skew is not a problem with most applications because,

- program execution times are usually short, so time stamp skew is only a few milliseconds. Most measurement requirements allow for a few milliseconds of skew.

- data processed into averages, maxima, minima, and so forth are composites of several measurements. Associated time stamps only reflect the time the last measurement was made and processing calculations were completed, so the significance of the exact time a specific sample was measured diminishes.

Applications measuring and storing sample data wherein exact time stamps are required can be adversely affected by time-stamp skew. Skew can be avoided by

- Making measurements in the scan before time-consuming code.
- Programming the CR800 such that the time stamp reflects the system time rather than the scan time. When **CallTable()** is executed from within the **Scan() / NextScan** construct, as is normally done, the time stamp reflects scan time. By executing the **CallTable()** instruction outside the **Scan() / NextScan** construct, the time stamp will reflect system time instead of scan time. CRBasic example *Time Stamping with System Time* (p. 296) shows the basic code requirements. The **DataTime()** instruction is a more recent introduction that facilitates time stamping with system time. See *Data Table Declarations* (p. 514) and *CRBasic Editor Help* for more information.

CRBasic Example 62. Time Stamping with System Time

```
'This program example demonstrates the time stamping of data with system time instead of
'the default use of scan time (time at which a scan started).
'
'Declare Variables
Public value

'Declare data table
DataTable(Test,True,1000)
  Sample(1,Value,FP2)
EndTable

SequentialMode

BeginProg

  Scan(1,Sec,10,0)

    'Delay -- in an operational program, delay may be caused by other code
    Delay(1,500,mSec)

    'Measure Value -- can be any analog measurement
    PanelTemp(Value,0)

    'Immediately call SlowSequence to execute CallTable()
    TriggerSequence(1,0)

  NextScan

'Allow data to be stored 510 ms into the Scan with a s.51 time stamp
  SlowSequence
    Do
      WaitTriggerSequence
      CallTable(Test)
    Loop

EndProg
```

Other time-processing CRBasic instructions are governed by these same rules. Consult *CRBasic Editor Help* for more information on specific instructions.

8.1.2 Analog Measurements — Details

Related Topics:
- *Analog Measurements — Overview* (p. 63)
- *Analog Measurements — Details* (p. 297)

The CR800 measures the following sensor analog output types:

- Voltage
  - Single-ended
  - Differential
- Current (using a resistive shunt)
- Resistance
- Full-bridge
- Half-bridge

Sensor connection is to **H**/**L**] terminals configurable for differential (**DIFF**) or single-ended (**SE**) inputs. For example, differential channel 1 is comprised of terminals **1H** and **1L**, with **1H** as high and **1L** as low.

8.1.2.1 Voltage Measurements — Details

Related Topics:
- Voltage Measurements — Specifications
- *Voltage Measurements — Overview* (p. 63)
- *Voltage Measurements — Details* (p. 297)

8.1.2.1.1 Voltage Measurement Mechanics

Measurement Sequence

An analog-voltage measurement, as illustrated in the figure *Simplified Voltage Measurement Sequence* (p. 298), proceeds as follows:

1. Switch
2. Settle
3. Amplify
4. Integrate
5. A to D (successive approximation)
6. Measurement scaled with multiplier and offset
7. Scaled value placed in memory

FIGURE. Simplified Voltage Measurement Sequence -- 8 10 30

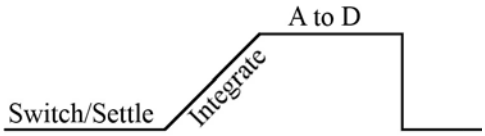

Figure 79. Simplified voltage measurement sequence

Voltage measurements are made using a successive approximation *A-to-D* (p. 481) converter to achieve a resolution of 14 bits. Prior to the A-to-D, a high impedance programmable-gain instrumentation amplifier (PGIA) amplifies the signal. See figure *Programmable Gain Input Amplifier (PGIA)* (p. 298). The CRBasic program controls amplifier gain and configuration — either single-ended input or differential input. Internal multiplexers route individual terminals to the PGIA.

Timing of measurement tasks is precisely controlled. The measurement schedule is determined at compile time and loaded into memory.

Using two different voltage-measurement instructions with the same voltage range takes about twice as long as using one instruction with two repetitions.

Parameters listed in table *CRBasic Parameters Varying Measurement Sequence and Timing* (p. 299) vary sequence and timing of voltage measurement instructions.

Figure 80. Programmable Gain Input Amplifier (PGIA)

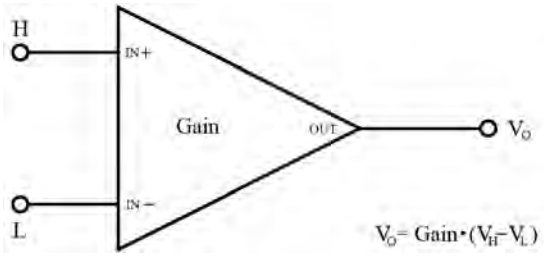

A voltage measurement proceeds as follows:

1. Set PGIA gain for the voltage range selected with the CRBasic measurement instruction parameter ***Range***.
2. Turn on excitation to the level selected with ***ExmV***.
3. Multiplex selected terminals (***InChan***) to the PGIA and delay for the entered settling time (***SettlingTime***).
4. Integrate the signal (see section *Measurement Integration* (p. 299)) and perform the A-to-D conversion.
5. Repeat for excitation reversal and input reversal as determined by parameters ***RevEx*** and ***RevDiff***.
6. Apply multitplier (***Mult***) and offset (***Offset***) to measured result.

The CR800 measures analog voltage by integrating the input signal for a fixed

duration and then holding the integrated value during the successive approximation analog-to-digital (A-to-D) conversion. The CR800 can make and store measurements from up to three differential or six single-ended channels configured from **H/L** terminals at the minimum scan interval of 10 ms (100 Hz) using fast-measurement-programming techniques as discussed in *Measurements: Faster Analog Rates* (p. 221). The maximum conversion rate is 2000 per second (2 kHz) for measurements made on a one single-ended channel.

Table 54. CRBasic Parameters Varying Measurement Sequence and Timing

CRBasic Parameter	Description
MeasOfs	Correct ground offset on single-ended measurements.
SettlingTime	Sensor input settling time.
Integ	Duration of input signal integration.
RevDiff	Reverse high and low differential inputs.
RevEx	Reverse polarity of excitation voltage.

Measurement Integration

Integrating the signal removes noise that creates error in the measurement. Slow integration removes more noise than fast integration. Integration time can be modified to reject 50 Hz and 60 Hz mains-power line noise.

Fast integration may be preferred at times to,

- minimize time skew between successive measurements.
- maximize throughput rate.
- maximize life of the CR800 power supply.
- minimize polarization of polar sensors such as those for measuring conductivity, soil moisture, or leaf wetness. Polarization may cause measurement errors or sensor degradation.

improve accuracy of an LVDT measurement. The induced voltage in an LVDT decays with time as current in the primary coil shifts from the inductor to the series resistance; a long integration time may result in most of signal decaying before the measurement is complete.

Single-Ended Measurements — Details

Related Topics:
- *Single-Ended Measurements — Overview* (p. 65)
- *Single-Ended Measurements — Details* (p. 299)

With reference to the figure *Programmable Gain Input Amplifier (PGIA)* (p. 298), during a single-ended measurement, the high signal (H) is routed to V+. The low signal (L) is automatically connected internally to signal ground with the low signal tied to ground (⏚) at the wiring panel. V+ corresponds to odd or even numbered **SE** terminals on the CR800 wiring panel. The single-ended configuration is used with the following CRBasic instructions:

- **VoltSE()**
- **BrHalf()**

- **BrHalf3W()**
- **TCSE()**
- **Therm107()**
- **Therm108()**
- **Therm109()**
- **Thermistor()**

Related Topics:
- *Differential Measurements — Overview* (p. 66)
- *Differential Measurements — Details* (p. 300)

Differential Measurements — Details

Using the figure *Programmable Gain Input Amplifier (PGIA)* (p. 298), for reference, during a differential measurement, the high signal (H) is routed to V+ and the low signal (L) is routed to V–.

An **H** terminal of an **H/L** terminal pair differential corresponds to V+. The **L** terminal corresponds to V–. The differential configuration is used with the following CRBasic instructions:

- **VoltDiff()**
- **BrFull()**
- **BrFull6W()**
- **BrHalf4W()**
- **TCDiff()**

8.1.2.1.2 Voltage Measurement Limitations

Caution Sustained voltages in excess of ±8.6 V applied to terminals configured for analog input can temporarily corrupt all analog measurements.

Warning Sustained voltages in excess of ±16 V applied to terminals configured for analog input will damage CR800 circuitry.

Voltage Ranges

Related Topics:
- Voltage Measurements — Specifications
- *Voltage Measurements — Overview* (p. 63)
- *Voltage Measurements — Details* (p. 297)

In general, use the smallest fixed-input range that accommodates the full-scale output of the sensor. This results in the best measurement accuracy and resolution. The CR6 has fixed input ranges for voltage measurements and an auto-range to automatically determine the appropriate input voltage range for a given measurement. The table *Analog Voltage Input Ranges and Options* (p. 301) lists these input ranges and codes.

An approximate 9% range overhead exists on fixed input voltage ranges. In other words, over-range on the ±2500 mV input range occurs at approximately 2725 mV and –2725 mV. The CR800 indicates a measurement over-range by returning a **NAN** (not a number) for the measurement.

Automatic Range Finding

For signals that do not fluctuate too rapidly, range argument ***AutoRange*** allows the CR800 to automatically choose the voltage range. ***AutoRange*** makes two measurements. The first measurement determines the range to use. It is made with a 250 µs integration on the ±5000 mV range. The second measurement is made using the range determined from the first. Both measurements use the settling time entered in the ***SettlingTime*** parameter. Auto-ranging optimizes resolution but takes longer than a measurement on a fixed range because of the two-measurement sequences.

An auto-ranged measurement will return **NAN** ("not a number") if the voltage exceeds the range picked by the first measurement. To avoid problems with a signal on the edge of a range, ***AutoRange*** selects the next larger range when the signal exceeds 90% of a range.

Use auto-ranging for a signal that occasionally exceeds a particular range, for example, a type-J thermocouple measuring a temperature usually less than 476 °C (±25 mV range) but occasionally as high as 500 °C (±250 mV range). ***AutoRange*** should not be used for rapidly fluctuating signals, particularly signals traversing multiple voltage ranges rapidly. The possibility exists that the signal can change ranges between the internal range check and the actual measurement.

Table 55. Analog Voltage Input Ranges and Options

Range Code	*Description*
mV5000	measures voltages between ±5000 mV
mV2500[1]	measures voltages between ±2500 mV
mV250[2]	measures voltages between ±250 mV
mV25[2]	measures voltages between ±25 mV
mV7_5[2]	measures voltages between ±7.5 mV
mV2_5[2]	measures voltages between ±2.5 mV
AutoRange[3]	datalogger determines the most suitable range

[1] Append with ***C*** to enable common-mode null / open-input detect and set excitation to full-scale (~2700 mV) (Example: ***mV2500***)

[2] Append with ***C*** to enable common-mode null / open-input detect (Example: ***mV25C***)

[3] Append with ***C*** to enable common-mode null / open-input detect on ranges ≤ ±250 mV, or just common-mode null on ranges > ±250 mV (Example: ***AutoRangeC***)

Input Limits / Common-Mode Range

Related Topics:
- Voltage Measurements — Specifications
- *Voltage Measurements — Overview* *(p. 63)*
- *Voltage Measurements — Details* *(p. 297)*

Note This section contains advanced information not required for normal operation of the CR800.

Summary

- Voltage input limits for measurement are ±5 Vdc. *Input Limits* is the specification listed in the section *Specifications* *(p. 95).*
- Common-mode range is not a fixed number. It varies with respect to the magnitude of the input voltage.
- The CR800 has features that help mitigate some of the effects of signals that exceed the *Input Limits* specification or the common-mode range.

With reference to the figure *PGIA with Input-Signal Decomposition* *(p. 302),* the PGIA processes the voltage difference between V+ and V–. It ignores the common-mode voltage, or voltages that are common to both inputs. The figure shows the applied input voltage decomposed into a common-mode voltage (V_{cm}) and the differential-mode component (V_{dm}) of a voltage signal. V_{cm} is the average of the voltages on the V+ and V– inputs. So, $V_{cm} = (V+ + V–)/2$ or the voltage remaining on the inputs when $V_{dm} = 0$. The total voltage on the V+ and V– inputs is given as $V+ = V_{cm} + V_{dm}/2$, and $V– = V_{cm} – V_{dm}/2$, respectively.

The PGIA ignores or rejects common-mode voltages as long as voltages at V+ and V– are within the *Input Limits* specification, which for the CR6 is ±5 Vdc relative to ground. Input voltages wherein V+ or V–, or both, are beyond the ±5 Vdc limit may suffer from undetected measurement errors. The *Common-Mode Range* defines the range of common-mode voltages that are not expected to induce undetected measurement errors. *Common-Mode Range* is different than *Input Limits* when the differential mode voltage in non-negligible. The following relationship is derived from the PGIA figure as:

$$\text{Common-Mode Range} = \pm 5\ \text{Vdc} – |V_{dm}/2|.$$

The conclusion follows that the common-mode range is not a fixed number, but instead decreases with increasing differential voltage. For differential voltages that are small compared to the input limits, common-mode range is essentially equivalent to *Input Limits*. Yet for a 5000 mV differential signal, the common-mode range is reduced to ±2.5 Vdc, whereas *Input Limits* are always ±5 Vdc. Consequently, the term *Input Limits* is used to specify the valid voltage range of the V+ and V– inputs into the PGIA.

Figure 81. PGIA with Input-Signal Decomposition

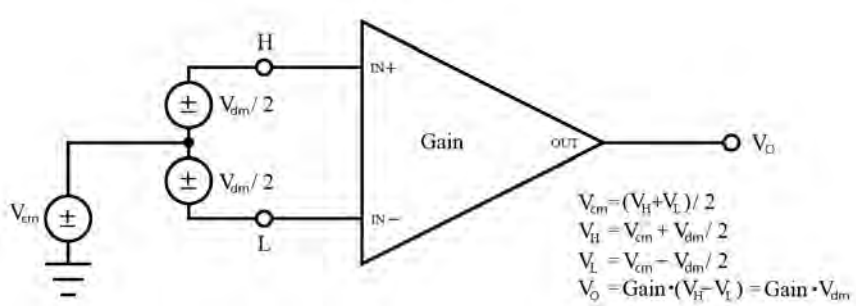

–

8.1.2.1.3 Voltage Measurement Quality

Read More Consult the following technical papers at *www.campbellsci.com/app-notes* (*http://www.campbellsci.com/app-notes*) for in-depth treatments of several topics addressing voltage measurement quality:
• *Preventing and Attacking Measurement Noise Problems*
• *Benefits of Input Reversal and Excitation Reversal for Voltage Measurements*
• *Voltage Measurement Accuracy, Self- Calibration, and Ratiometric Measurements*
• *Estimating Measurement Accuracy for Ratiometric Measurement Instructions.*

The following topics discuss methods of generally improving voltage measurements. Related information for special case voltage measurements (*thermocouples* (p. 319), *current loops* (p. 319), *resistance* (p. 319), and *strain* (p. 324)) is located in sections for those measurements.

Single-Ended or Differential?

Deciding whether a differential or single-ended measurement is appropriate is usually, by far, the most important consideration when addressing voltage measurement quality. The decision requires trade-offs of accuracy and precision, noise cancelation, measurement speed, available measurement hardware, and fiscal constraints.

In broad terms, analog voltage is best measured differentially because these measurements include noise reduction features, listed below, that are not included in single-ended measurements.

- Passive Noise Rejection
  - No voltage reference offset
  - Common-mode noise rejection, which filters capacitively coupled noise
- Active Noise Rejection
  - Input reversal
    - Review *Input and Excitation Reversal* (p. 317) for details
    - Increases by twice the input reversal signal integration time

Reasons for using single-ended measurements, however, include:

- Not enough differential terminals available. Differential measurements use twice as many **H**/**L**] terminals as do single-ended measurements.
- Rapid sampling is required. Single-ended measurement time is about half that of differential measurement time.
- Sensor is not designed for differential measurements. Many Campbell Scientific sensors are not designed for differential measurement, but the draw backs of a single-ended measurement are usually mitigated by large programmed excitation and/or sensor output voltages.

Sensors with a high signal-to-noise ratio, such as a relative-humidity sensor with a full-scale output of 0 to 1000 mV, can normally be measured as single-ended without a significant reduction in accuracy or precision.

Sensors with a low signal-to-noise ratio, such as thermocouples, should normally be measured differentially. However, if the measurement to be made does not require high accuracy or precision, such as thermocouples measuring brush-fire

temperatures, which can exceed 2500 °C, a single-ended measurement may be appropriate. If sensors require differential measurement, but adequate input terminals are not available, an analog multiplexer should be acquired to expand differential input capacity. Refer to the appendix *Analog Multiplexers* (p. 622) for information concerning available multiplexers.

Because a single-ended measurement is referenced to CR800 ground, any difference in ground potential between the sensor and the CR800 will result in an error in the measurement. For example, if the measuring junction of a copper-constantan thermocouple being used to measure soil temperature is not insulated, and the potential of earth ground is 1 mV greater at the sensor than at the point where the CR800 is grounded, the measured voltage will be 1 mV greater than the true thermocouple output, or report a temperature that is approximately 25 °C too high. A common problem with ground-potential difference occurs in applications wherein external, signal-conditioning circuitry is powered by the same source as the CR800, such as an ac mains power receptacle. Despite being tied to the same ground, differences in current drain and lead resistance may result in a different ground potential between the two instruments. So, as a precaution, a differential measurement should be made on the analog output from an external signal conditioner; differential measurements MUST be used when the low input is known to be different from ground.

Electronic Noise

Electronic "noise" can cause significant error in a voltage measurement, especially when measuring voltages less than 200 mV. So long as input limitations are observed, the PGIA ignores voltages, including noise, that are common to each side of a differential-input pair. This is the common-mode voltage. Ignoring (rejecting or canceling) the common-mode voltage is an essential feature of the differential input configuration that improves voltage measurements.

Figure *PGIA with Input-Signal Decomposition* (p. 302), illustrates the common-mode component (V_{cm}) and the differential-mode component (V_{dm}) of a voltage signal. V_{cm} is the average of the voltages on the V+ and V– inputs. So, $V_{cm} = (V+ + V–)/2$ or the voltage remaining on the inputs when $V_{dm} = 0$. The total voltage on the V+ and V– inputs is given as $V+ = V_{cm} + V_{dm}/2$, and $V_L = V_{cm} – V_{dm}/2$, respectively.

Measurement Accuracy

Read More For an in-depth treatment of accuracy estimates, see the technical paper *Measurement Error Analysis* available at *www.campbellsci.com/app-notes (http://www.campbellsci.com/app-notes).*

Accuracy describes the difference between a measurement and the true value. Many factors affect accuracy. This section discusses the affect percent-or-reading, offset, and resolution have on the accuracy of the measurement of an analog-voltage sensor signal. Accuracy is defined as follows:

accuracy = percent-of-reading + offset

where percents-of-reading are tabulated in the table *Analog-Voltage Measurement Accuracy* (p. 305), and offsets are tabulated in the table *Analog-Voltage Measurement Offsets* (p. 305).

Note Error discussed in this section and error-related specifications of the CR800 do not include error introduced by the sensor or by the transmission of the sensor signal to the CR800.

Table 56. Analog-Voltage Measurement Accuracy[1]

0 to 40 °C	*–25 to 50 °C*	*–55 to 85 °C[2]*
±(0.06% of reading + offset)	±(0.12% of reading + offset)	±(0.18% of reading + offset)

[1] Assumes the CR800 is within factory specifications
[2] Available only with purchased extended temperature option (-XT)

Table 57. Analog-Voltage Measurement Offsets

Differential Measurement With Input Reversal	*Differential Measurement Without Input Reversal*	*Single-Ended*
1.5 • Basic Resolution + 1.0 µV	3 • Basic Resolution + 2.0 µV	3 • Basic Resolution + 3.0 µV

Note — the value for Basic Resolution is found in the table *Analog-Voltage Measurement Resolution* (p. 305).

Table 58. Analog-Voltage Measurement Resolution

Input Voltage Range (mV)	*Differential Measurement With Input Reversal (µV)*	*Basic Resolution (µV)*
±5000	667	1333
±2500	333	667
±250	33.3	66.7
25	3.33	6.7
7.5	1.0	2.0
2.5	0.33	0.67

Note — see *Specifications* (p. 95) for a complete tabulation of measurement resolution

As an example, figure *Voltage Measurement Accuracy Band Example* (p. 306) shows changes in accuracy as input voltage changes on the ±2500 input range. Percent-of-reading is the principle component, so accuracy improves as input voltage decreases. Offset is small, but could be significant in applications wherein the sensor-signal voltage is very small, such as is encountered with thermocouples.

Offset depends on measurement type and voltage-input range. Offsets equations are tabulated in table *Analog Voltage Measurement Offsets* (p. 305). For example, for a differential measurement with input reversal on the ±5000 mV input range, the offset voltage is calculated as follows:

offset = 1.5 • Basic Resolution + 1.0 µV

= (1.5 • 667 µV) + 1.0 µV

= 1001.5 µV

where Basic Resolution is the published resolution is taken from the table *Analog-Voltage Measurement Resolution* (p. 305).

Figure 82. Example voltage measurement accuracy band, including the effects of percent of reading and offset, for a differential measurement with input reversal at a temperature between 0 to 40 °C.

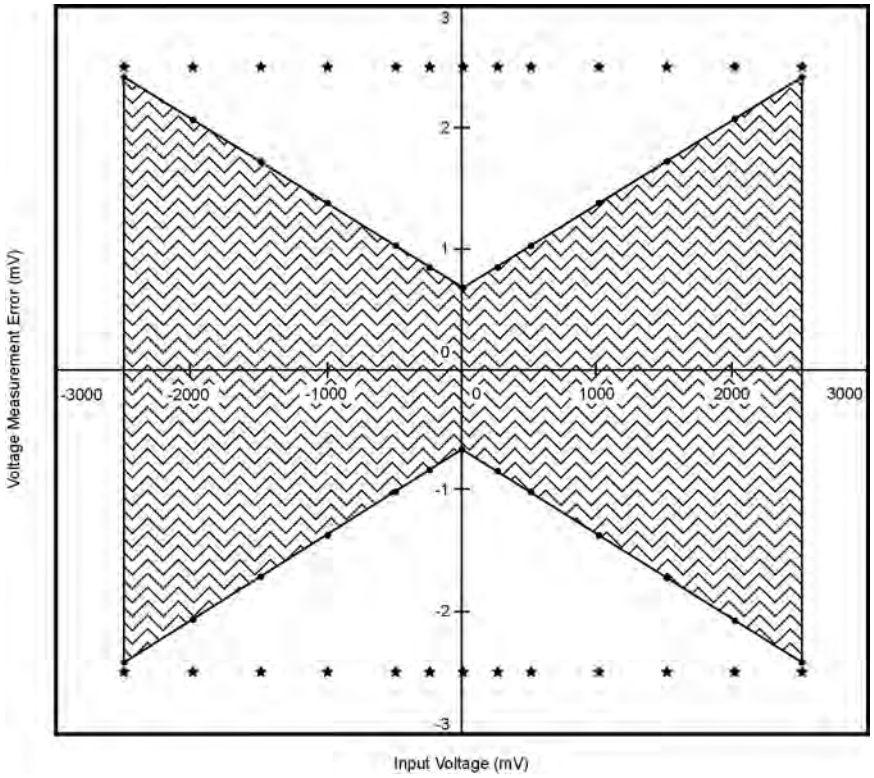

Measurement Accuracy Example

The following example illustrates the effect percent-of-reading and offset have on measurement accuracy. The effect of offset is usually negligible on large signals:

Example:

- Sensor-signal voltage: ≈2500 mV
- CRBasic measurement instruction: **VoltDiff()**
- Programmed input-voltage range (***Range***): ***mV2500*** (±2500 mV)
- Input measurement reversal (***RevDiff***): ***True***
- CR800 circuitry temperature: 10 °C

Accuracy of the measurement is calculated as follows:

accuracy = percent-of-reading + offset

where

percent-of-reading = 2500 mV • ±0.06%

= ±1.5 mV

and

offset = (1.5 • 667 µV) + 1 µV

= 1.00 mV

Therefore,

accuracy = ±1.5 mV + 1.00 mV

= ±2.5 mV

Integration

The CR800 incorporates circuitry to perform an analog integration on voltages to be measured prior to the *A-to-D* (p. 481) conversion. Integrating the the analog signal removes noise that creates error in the measurement. Slow integration removes more noise than fast integration. When the duration of the integration matches the duration of one cycle of ac power mains noise, that noise is filtered out. The table *Analog Measurement Integration* (p. 307) lists valid integration duration arguments.

Faster integration may be preferred to achieve the following objectives:

- Minimize time skew between successive measurements
- Maximize throughput rate
- Maximize life of the CR800 power supply
- Minimize polarization of polar sensors such as those for measuring conductivity, soil moisture, or leaf wetness. Polarization may cause measurement errors or sensor degradation.
- Improve accuracy of an LVDT measurement. The induced voltage in an LVDT decays with time as current in the primary coil shifts from the inductor to the series resistance; a long integration may result in most of signal decaying before the measurement is complete.

Read More See White Paper "Preventing and Attacking Measurement Noise Problems" at *www.campbellsci.com*.

The magnitude of the frequency response of an analog integrator is a SIN(x)/x shape, which has notches (transmission zeros) occurring at 1/(integer multiples) of the integration duration. Consequently, noise at 1/(integer multiples) of the integration duration is effectively rejected by an analog integrator. If reversing the differential inputs or reversing the excitation is specified, there are two separate integrations per measurement; if both reversals are specified, there are four separate integrations.

Table 59. Analog Measurement Integration		
Integration Time (ms)	***Integration Parameter Argument***	***Comments***
0 to 16000 µs	***0 to 16000***	250 µs is considered fast and normally the minimum
16.667 ms	***_60Hz***	Filters 60 Hz noise
20 ms	***_50Hz***	Filters 50 Hz noise

Ac Power-Line Noise Rejection

Grid or mains power (50 or 60 Hz, 230 or 120 Vac) can induce electrical noise at integer multiples of 50 or 60 Hz. Small analog voltage signals, such as thermocouples and pyranometers, are particularly susceptible. CR800 voltage measurements can be programmed to reject (filter) 50 Hz or 60 Hz related noise. Noise is rejected by using a signal integration time that is relative to the length of the ac noise cycle, as illustrated in the figure *Ac Power-Line Noise Rejection Techniques* (p. 308).

FIGURE. Ac power line noise rejection techniques -- 8 10 30

Figure 83. Ac-Power Noise-Rejection Techniques

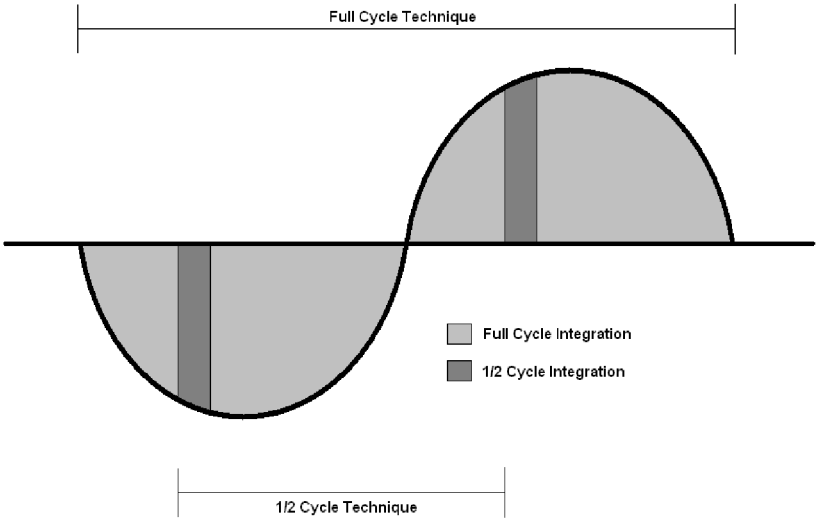

The CR800 rejects ac power line noise on all voltage ranges except ***mV5000*** and ***mV2500*** by integrating the measurement over exactly one full ac cycle before *A-to-D* (p. 481) conversion as listed in table *ac Noise Rejection on Small Signals* (p. 308).

Table 60. Ac Noise Rejection on Small Signals[1]		
Ac Power Line Frequency	***Measurement Integration Duration***	***CRBasic Integration Code***
60 Hz	16.667 ms	***_60Hz***
50 Hz	20 ms	***_50Hz***

[1] Applies to all analog input voltage ranges except ***mV2500*** and ***mV5000***.

If rejecting ac-line noise when measuring with the 2500 mV (***mV2500***) and 5000 mV (***mV5000***) ranges, the CR800 makes two fast measurements separated in time by one-half line cycle. A 60 Hz half cycle is 8333 µs, so the second measurement must start 8333 µs after the first measurement integration began. The A-to-D conversion time is approximately 170 µs, leaving a maximum input-settling time of approximately 8160 µs (8333 µs – 170 µs). If the maximum input-settling time is exceeded, 60 Hz line-noise rejection will not occur. For 50 Hz rejection, the maximum input settling time is approximately 9830 µs (10,000 µs – 170 µs). The CR800 does not prevent or warn against setting the settling time beyond the half-cycle limit. Table *ac Noise Rejection on Large Signals* (p. 309) lists details of the half-cycle ac-power line-noise rejection technique.

Table 61. Ac Noise Rejection on Large Signals[1]				
Ac-Power Line Frequency	***Measurement Integration Time***	***CRBasic Integration Code***	***Default Settling Time***	***Maximum Recommended Settling Time[2]***
60 Hz	250 µs • 2	***_60Hz***	3000 µs	8330 µs
50 Hz	250 µs • 2	***_50Hz***	3000 µs	10000 µs

[1] Applies to analog input voltage ranges ***mV2500*** and ***mV5000***.

[2] Excitation time and settling time are equal in measurements requiring excitation. The CR800 cannot excite **VX** excitation terminals during A-to-D conversion. The one-half-cycle technique with excitation limits the length of recommended excitation and settling time for the first measurement to one-half-cycle. The CR800 does not prevent or warn against setting a settling time beyond the one-half-cycle limit. For example, a settling time of up to 50000 µs can be programmed, but the CR800 will execute the measurement as follows:

1. CR800 turns excitation on, waits 50000 µs, and then makes the first measurement.
2. During A-to-D, CR800 turns off excitation for ≈170 µs.
3. Excitation is switched on again for one-half cycle, then the second measurement is made.

Restated, when the CR800 is programmed to use the half-cycle 50 Hz or 60 Hz rejection techniques, a sensor does not see a continuous excitation of the length entered as the settling time before the second measurement — if the settling time entered is greater than one-half cycle. This causes a truncated second excitation. Depending on the sensor used, a truncated second excitation may cause measurement errors.

Signal-Settling Time

Settling time allows an analog voltage signal to settle closer to the true magnitude prior to measurement. To minimize measurement error, signal settling is needed when a signal has been affected by one or more of the following:

- A small transient originating from the internal multiplexing that connects a CR800 terminal with measurement circuitry
- A relatively large transient induced by an adjacent excitation conductor on the signal conductor, if present,because of capacitive coupling during a bridge measurement

- Dielectric absorption. 50 Hz or 60 Hz integrations require a relatively long reset time of the internal integration capacitor before the next measurement.

The rate at which the signal settles is determined by the input settling-time constant, which is a function of both the source resistance and fixed-input capacitance (3.3 nfd) of the CR800.

Rise and decay waveforms are exponential. Figure *Input Voltage Rise and Transient Decay* (p. 310) shows rising and decaying waveforms settling closer to the true signal magnitude, V_{so}. The ***SettlingTime*** parameter of an analog measurement instruction allows tailoring of measurement instruction settling times with 100 µs resolution up to 50000 µs.

Programmed settling time is a function of arguments placed in the ***SettlingTime*** and ***Integ*** parameters of a measurement instruction. Argument combinations and resulting settling times are listed in table *CRBasic Measurement Settling Times* (p. 310). Default settling times (those resulting when ***SettlingTime*** = ***0***) provide sufficient settling in most cases. Additional settling time is often programmed when measuring high-resistance (high-impedance) sensors or when sensors connect to the input terminals by long leads.

Measurement time of a given instruction increases with increasing settling time. For example, a 1 ms increase in settling time for a bridge instruction with input reversal and excitation reversal results in a 4 ms increase in time for the CR800 to perform the instruction.

Figure 84. Input-voltage rise and transient decay

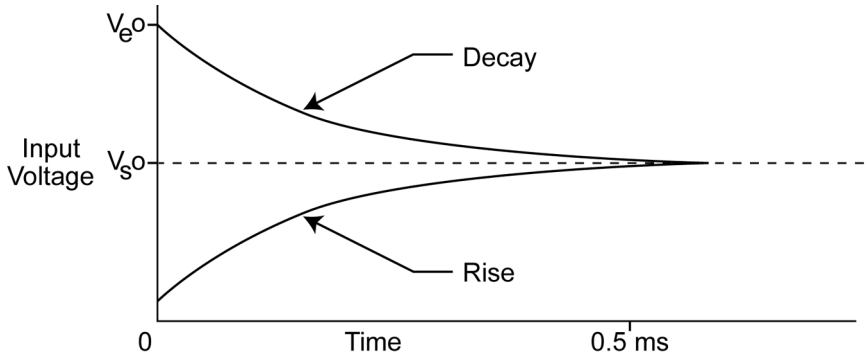

Table 62. CRBasic Measurement Settling Times

SettlingTime ***Argument***	Integ ***Argument***	***Resultant Settling Time***[1]
0	***250***	450 µs
0	***_50Hz***	3 ms
0	***_60Hz***	3 ms
integer ≥ ***100***	integer	µs entered in ***SettlingTime*** argument

[1] 450 µs is the minimum settling time required to meet CR800 resolution specifications.

Settling Errors

When sensors require long lead lengths, use the following general practices to minimize settling errors:

- Do not use wire with PVC-insulated conductors. PVC has a high dielectric constant, which extends input settling time.
- Where possible, run excitation leads and signal leads in separate shields to minimize transients.
- When measurement speed is not a prime consideration, additional time can be used to ensure ample settling time. The settling time required can be measured with the CR800.
- In difficult cases, settling error can be measured as described in section *Measuring Settling Time* (p. 311).

Measuring Settling Time

Settling time for a particular sensor and cable can be measured with the CR800. Programming a series of measurements with increasing settling times will yield data that indicate at what settling time a further increase results in negligible change in the measured voltage. The programmed settling time at this point indicates the settling time needed for the sensor / cable combination.

CRBasic example *Measuring Settling Time* (p. 311) presents CRBasic code to help determine settling time for a pressure transducer using a high-capacitance semiconductor. The code consists of a series of full-bridge measurements (**BrFull()**) with increasing settling times. The pressure transducer is placed in steady-state conditions so changes in measured voltage are attributable to settling time rather than changes in pressure. Reviewing the section *Programming* (p. 120) may help in understanding the CRBasic code in the example.

The first six measurements are shown in table *First Six Values of Settling-Time Data* (p. 313). Each trace in figure *Settling Time for Pressure Transducer* (p. 313) contains all twenty **PT()** mV/V values (left axis) for a given record number, along with an average value showing the measurements as percent of final reading (right axis). The reading has settled to 99.5% of the final value by the fourteenth measurement, which is contained in variable PT(14). This is suitable accuracy for the application, so a settling time of 1400 µs is determined to be adequate.

CRBasic Example 63. Measuring Settling Time

```
'This program example demonstrates the measurement of settling time using a single
'measurement instruction multiple times in succession.  In this case, the program measures
'the temperature of the CR800 wiring panel.

Public RefTemp 'Declare variable to receive instruction

BeginProg
  Scan(1,Sec,3,0)
    PanelTemp(RefTemp, 250) 'Instruction to make measurement
  NextScan
EndProg measures the settling time of a sensor measured with a differential
'voltage measurement

Public PT(20)                                 'Variable to hold the measurements

DataTable(Settle,True,100)
  Sample(20,PT(),IEEE4)
EndTable

BeginProg
  Scan(1,Sec,3,0)

    BrFull(PT(1),1,mV7.5,1,Vx1,2500,True,True,100, 250,1.0,0)
    BrFull(PT(2),1,mV7.5,1,Vx1,2500,True,True,200, 250,1.0,0)
    BrFull(PT(3),1,mV7.5,1,Vx1,2500,True,True,300, 250,1.0,0)
    BrFull(PT(4),1,mV7.5,1,Vx1,2500,True,True,400, 250,1.0,0)
    BrFull(PT(5),1,mV7.5,1,Vx1,2500,True,True,500, 250,1.0,0)
    BrFull(PT(6),1,mV7.5,1,Vx1,2500,True,True,600, 250,1.0,0)
    BrFull(PT(7),1,mV7.5,1,Vx1,2500,True,True,700, 250,1.0,0)
    BrFull(PT(8),1,mV7.5,1,Vx1,2500,True,True,800, 250,1.0,0)
    BrFull(PT(9),1,mV7.5,1,Vx1,2500,True,True,900, 250,1.0,0)
    BrFull(PT(10),1,mV7.5,1,Vx1,2500,True,True,1000, 250,1.0,0)
    BrFull(PT(11),1,mV7.5,1,Vx1,2500,True,True,1100, 250,1.0,0)
    BrFull(PT(12),1,mV7.5,1,Vx1,2500,True,True,1200, 250,1.0,0)
    BrFull(PT(13),1,mV7.5,1,Vx1,2500,True,True,1300, 250,1.0,0)
    BrFull(PT(14),1,mV7.5,1,Vx1,2500,True,True,1400, 250,1.0,0)
    BrFull(PT(15),1,mV7.5,1,Vx1,2500,True,True,1500, 250,1.0,0)
    BrFull(PT(16),1,mV7.5,1,Vx1,2500,True,True,1600, 250,1.0,0)
    BrFull(PT(17),1,mV7.5,1,Vx1,2500,True,True,1700, 250,1.0,0)
    BrFull(PT(18),1,mV7.5,1,Vx1,2500,True,True,1800, 250,1.0,0)
    BrFull(PT(19),1,mV7.5,1,Vx1,2500,True,True,1900, 250,1.0,0)
    BrFull(PT(20),1,mV7.5,1,Vx1,2500,True,True,2000, 250,1.0,0)

    CallTable Settle

  NextScan
EndProg
```

Figure 85. Settling Time for Pressure Transducer

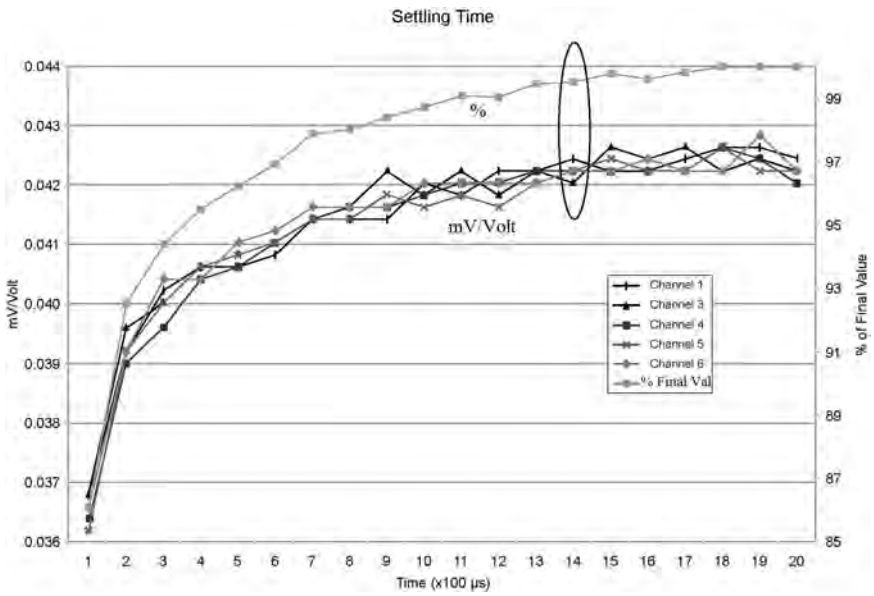

Table 63. First Six Values of Settling-Time Data							
TIMESTAMP	***REC***	***PT(1)***	***PT(2)***	***PT(3)***	***PT(4)***	***PT(5)***	***PT(6)***
		Smp	***Smp***	***Smp***	***Smp***	***Smp***	***Smp***
1/3/2000 23:34	0	0.03638599	0.03901386	0.04022673	0.04042887	0.04103531	0.04123745
1/3/2000 23:34	1	0.03658813	0.03921601	0.04002459	0.04042887	0.04103531	0.0414396
1/3/2000 23:34	2	0.03638599	0.03941815	0.04002459	0.04063102	0.04042887	0.04123745
1/3/2000 23:34	3	0.03658813	0.03941815	0.03982244	0.04042887	0.04103531	0.04103531
1/3/2000 23:34	4	0.03679027	0.03921601	0.04022673	0.04063102	0.04063102	0.04083316

Open-Input Detect

Note Much of the information in the following section is highly technical and is not necessary for the routine operation of the CR800. The information is included to foster a deeper understanding of the open-input detection feature of the CR800.

Summary

- An option to detect an open-input, such as a broken sensor or loose connection, is available in the CR800.
- The option is selected by appending a ***C*** to the ***Range*** code.
- Using this option, the result of a measurement on an open connection will be **NAN** (not a number).

A useful option available to single-ended and differential measurements is the detection of open inputs due to a broken or disconnected sensor wire. This prevents otherwise undetectable measurement errors. Range codes appended with ***C*** enable open-input detect for all input ranges except the ±5000 mV input range (see table *Analog Voltage Input Ranges with CMN / OID* (p. 301)).

Appending the ***Range*** code with a ***C*** results in a 50 µs internal connection of the V+ input of the PGIA to a large over-voltage. The V– input is connected to ground. Upon disconnecting the inputs, the true input signal is allowed to settle and the measurement is made normally. If the associated sensor is connected, the signal voltage is measured. If the input is open (floating), the measurement will over-range since the injected over-voltage will still be present on the input, with **NAN** as the result.

Range codes and applicable over-voltage magnitudes are found in the table *Range-Code Option C Over-Voltages* *(p. 314).*

The ***C*** option may not work, or may not work well, in the following applications:

- If the input is not a truly open circuit, such as might occur on a wet cut cable end, the open circuit may not be detected because the input capacitor discharges through external leakage to ground to a normal voltage within the settling time of the measurement. This problem is worse when a long settling time is selected, as more time is given for the input capacitors to discharge to a "normal" level.
- If the open circuit is at the end of a very long cable, the test pulse (300 mV) may not charge the cable (with its high capacitance) up to a voltage that generates NAN or a distinct error voltage. The cable may even act as an aerial and inject noise which also might not read as an error voltage.
- The sensor may "object" to the test pulse being connected to its output, even for 100 µs. There is little or no risk of damage, but the sensor output may be caused to temporarily oscillate. Programming a longer settling time in the CRBasic measurement instruction to allow oscillations to decay before the A-to-D conversion may mitigate the problem.

Table 64. Range-Code Option *C* Over-Voltages

Input Range	***Over-Voltage***
±2.5 mV ±7.5 mV ±25 mV ±250 mV	300 mV
±2500 mV	***C*** option with caveat[1]
±5000 mV	***C*** option not available

[1]***C*** results in the H terminal being briefly connected to a voltage greater than 2500 mV, while the L terminal is connected to ground. The resulting common-mode voltage is 1250 mV, which is not adequate to null residual common-mode voltage, but is adequate to facilitate a type of open-input detect. This requires inclusion of an **If** / **Then** / **Else** statement in the CRBasic program to test the results of the measurement. For example:

•The result of a **VoltDiff()** measurement using ***mV2500C*** as the ***Range*** code can be tested for a result >2500 mV, which would indicate an open input.

•The result of the **BrHalf()** measurement, **X**, using the ***mV2500C*** range code can be tested for values >***1***. A result of **X** > **1** indicates an open input for the primary measurement, V1, where X = V1/Vx and Vx is the excitation voltage. A similar strategy can be used with other bridge measurements.

Offset Voltage Compensation

Related Topics
- *Auto Calibration — Overview* (p. 91)
- *Auto Calibration — Details* (p. 326)
- *Auto-Calibration — Errors* (p. 466)
- *Offset Voltage Compensation* (p. 315)
- *Factory Calibration* (p. 92)
- *Factory Calibration or Repair Procedure* (p. 452)

Summary
Measurement offset voltages are unavoidable, but can be minimized.

Offset voltages originate with:
- Ground currents
- Seebeck effect
- Residual voltage from a previous measurement

Remedies include:
- Connect power grounds to power ground terminals (**G**)
- Use input reveral (***RevDiff*** = ***True***) with differential measurements
- Automatic offset compensation for differential measurements when ***RevDiff*** = ***False***
- Automatic offset compensation for single-ended measurements when ***MeasOff*** = ***False***
- Better offset compensation when ***MeasOff*** = ***True***
- Excitation reversal (***RevEx*** = ***True***)
- Longer settling times

Voltage offset can be the source of significant error. For example, an offset of 3 µV on a 2500 mV signal causes an error of only 0.00012%, but the same offset on a 0.25 mV signal causes an error of 1.2%. The primary sources of offset voltage are ground currents and the Seebeck effect.

Single-ended measurements are susceptible to voltage drop at the ground terminal caused by return currents from another device that is powered from the CR800 wiring panel, such as another manufacturer's telecommunication modem, or a sensor that requires a lot of power. Currents >5 mA are usually undesirable. The error can be avoided by routing power grounds from these other devices to a power ground **G** terminal on the CR800 wiring panel, rather than using a signal ground (⏚) terminal. Ground currents can be caused by the excitation of resistive-bridge sensors, but these do not usually cause offset error. These currents typically only flow when a voltage excitation is applied. Return currents associated with voltage excitation cannot influence other single-ended measurements because the excitation is usually turned off before the CR800 moves to the next measurement. However, if the CRBasic program is written in such a way that an excitation terminal is enabled during an unrelated measurement of a small voltage, an offset error may occur.

The Seebeck effect results in small thermally induced voltages across junctions of dissimilar metals as are common in electronic devices. Differential measurements are more immune to these than are single-ended measurements because of passive voltage cancelation occurring between matched high and low pairs such as **1H**/**1L**. So use differential measurements when measuring critical low-level

voltages, especially those below 200 mV, such as are output from pyranometers and thermocouples. Differential measurements also have the advantage of an input reversal option, ***RevDiff***. When ***RevDiff*** is ***True***, two differential measurements are made, the first with a positive polarity and the second reversed. Subtraction of opposite polarity measurements cancels some offset voltages associated with the measurement.

Single-ended and differential measurements without input reversal use an offset voltage measurement with the PGIA inputs grounded. For differential measurements without input reversal, this offset voltage measurement is performed as part of the routine auto-calibration of the CR800. Single-ended measurement instructions **VoltSE()** and **TCSe()** ***MeasOff*** parameter determines whether the offset voltage measured is done at the beginning of measurement instruction, or as part of self-calibration. This option provides you with the opportunity to weigh measurement speed against measurement accuracy. When ***MeasOff*** = ***True***, a measurement of the single-ended offset voltage is made at the beginning of the **VoltSE()** instruction. When ***MeasOff*** = ***False***, an offset voltage measurement is made during self-calibration. For slowly fluctuating offset voltages, choosing ***MeasOff*** = ***True*** for the **VoltSE()** instruction results in better offset voltage performance.

Ratiometric measurements use an excitation voltage or current to excite the sensor during the measurement process. Reversing excitation polarity also reduces offset voltage error. Setting the ***RevEx*** parameter to ***True*** programs the measurement for excitation reversal. Excitation reversal results in a polarity change of the measured voltage so that two measurements with opposite polarity can be subtracted and divided by 2 for offset reduction similar to input reversal for differential measurements. Ratiometric differential measurement instructions allow both ***RevDiff*** and ***RevEx*** to be set ***True***. This results in four measurement sequences:

- positive excitation polarity with positive differential input polarity
- negative excitation polarity with positive differential input polarity
- positive excitation polarity with negative differential input polarity
- positive excitation polarity then negative excitation differential input polarity

For ratiometric single-ended measurements, such as a **BrHalf()**, setting ***RevEx*** = ***True*** results in two measurements of opposite excitation polarity that are subtracted and divided by 2 for offset voltage reduction. For ***RevEx*** = ***False*** for ratiometric single-ended measurements, an offset-voltage measurement is made during the self-calibration.

When analog voltage signals are measured in series by a single measurement instruction, such as occurs when **VoltSE()** is programmed with ***Reps*** = ***2*** or more, measurements on subsequent terminals may be affected by an offset, the magnitude of which is a function of the voltage from the previous measurement. While this offset is usually small and negligible when measuring large signals, significant error, or **NAN**, can occur when measuring very small signals. This effect is caused by dielectric absorption of the integrator capacitor and cannot be overcome by circuit design. Remedies include the following:

- Program longer settling times
- Use an individual instruction for each input terminal, the effect of which is to reset the integrator circuit prior to integration.

- Avoid preceding a very small voltage input with a very large voltage input in a measurement sequence if a single measurement instruction must be used.

The table *Offset-Voltage Compensation Options* (p. 317) lists some of the tools available to minimize the effects of offset voltages.

Table 65. Offset Voltage Compensation Options

CRBasic Measurement Instruction	***Input Reversal*** (RevDiff =True)	***Excitation Reversal*** (RevEx = True)	***Measure Offset During Measurement*** (MeasOff = True)	***Measure Offset During Background Calibration*** (RevDiff = False) (RevEx = False) (MeasOff = False)
VoltDiff()	✓			✓
VoltSe()			✓	✓
TCDiff()	✓			✓
TCSe()			✓	✓
BrHalf()		✓		✓
BrHalf3W()		✓		✓
Therm107()		✓		✓
Therm108()		✓		✓
Therm109()		✓		✓
BrHalf4W()	✓	✓		✓
BrFull()	✓	✓		✓
BrFull6W()	✓	✓		✓
AM25T()	✓	✓		✓

Input and Excitation Reversal

Reversing inputs (differential measurements) or reversing polarity of excitation voltage (bridge measurements) cancels stray voltage offsets. For example, if 3 µV offset exists in the measurement circuitry, a 5 mV signal is measured as 5.003 mV. When the input or excitation is reversed, the second sub-measurement is –4.997 mV. Subtracting the second sub-measurement from the first and then dividing by 2 cancels the offset:

```
5.003 mV - (-4.997 mV) = 10.000 mV
10.000 mV / 2 = 5.000 mV
```

When the CR800 reverses differential inputs or excitation polarity, it delays the same settling time after the reversal as it does before the first sub-measurement. So, there are two delays per measurement when either ***RevDiff*** or ***RevEx*** is used. If both ***RevDiff*** and ***RevEx*** are ***True***, four sub-measurements are performed; positive and negative excitations with the inputs one way and positive and negative excitations with the inputs reversed. The automatic procedure then is as follows,

1. Switches to the measurement terminals
2. Sets the excitation, and then settle, and then **measure**
3. Reverse the excitation, and then settles, and then **measure**
4. Reverse the excitation, reverse the input terminals, settle, **measure**
5. Reverse the excitation, settle, **measure**

There are four delays per **measure**. The CR800 processes the four sub-measurements into the reported measurement. In cases of excitation reversal, excitation time for each polarity is exactly the same to ensure that ionic sensors do not polarize with repetitive measurements.

Read More A white paper entitled "The Benefits of Input Reversal and Excitation Reversal for Voltage Measurements" is available at *www.campbellsci.com*.

Ground Reference Offset Voltage

When ***MeasOff*** is enabled (= ***True***), the CR800 measures the offset voltage of the ground reference prior to each **VoltSe()** or **TCSe()** measurement. This offset voltage is subtracted from the subsequent measurement.

From Background Calibration

If ***RevDiff***, ***RevEx***, or ***MeasOff*** is disabled (= ***False***), offset voltage compensation is continues to be automatically performed, albeit less effectively, by using measurements from the automatic background calibration. Disabling ***RevDiff***, ***RevEx***, or ***MeasOff*** speeds up measurement time; however, the increase in speed comes at the cost of accuracy because of the following:

1 ***RevDiff***, ***RevEx***, and ***MeasOff*** are more effective.

2 Background calibrations are performed only periodically, so more time skew occurs between the background calibration offsets and the measurements to which they are applied.

Note When measurement duration must be minimal to maximize measurement frequency, consider disabling ***RevDiff***, ***RevEx,*** and ***MeasOff*** when CR800 module temperatures and return currents are slow to change.

Time Skew Between Measurements

Time skew between consecutive voltage measurements is a function of settling and integration times, A-to-D conversion, and the number entered into the ***Reps*** parameter of the **VoltDiff()** or **VoltSE()** instruction. A close approximation is:

time skew = settling time + integration time + A-to-D conversion time[1] + reps[2]

1 A-to-D conversion time, which equals 15 µs.
2 If ***Reps*** > ***1*** (multiple measurements by a single instruction), no additional time is required. If ***Reps*** = ***1*** in consecutive voltage instructions, add 15 µs per instruction.

8.1.2.2 Thermocouple Measurements —- Details

Related Topics:
- Thermocouple Measurements — Details
- Thermocouple Measurements — Instructions

Thermocouple measurements are special case voltage measurements.

Note Thermocouples are inexpensive and easy to use. However, despite the use of a thermocouple in the *Quickstart Tutorial* (p. 41), the CR800 is not designed for accurate thermocouple measurement when thermocouples are attached directly to the wiring panel.

CR800 design features that cause thermocouple measurement inaccuracy include:

- lack of an insulating wiring-terminal cover.
- no high-thermal mass element incorporated in the wiring panel.
- position of the on-board reference thermistor in the wiring panel is not optimal.

The absence of these design features causes significant error in the reference junction temperature measurement.

If the CR800 must be used for thermocouple measurements, and those measurements must be better than roughly 5 degrees in accuracy, an external reference junction, such as a *multiplexer* (p. 622), should be used. In addition, you should carefully evaluate relevant parts of the *Thermocouple Measurements* section of the *CR1000 Datalogger Operator's Manual*, which is available at *www.campbellsci.com/manuals* (*http://www.campbellsci.com/manuals*).

8.1.2.3 Current Measurements — Details

Related Topics:
- *Current Measurements — Overview* (p. 66)
- *Current Measurements — Details* (p. 319)

For a complete treatment of current-loop sensors (4 to 20 mA, for example), please consult the following publications available at *www.campbellsci.com/app-notes* (*http://www.campbellsci.com/app-notes*):

- *Current Output Transducers Measured with Campbell Scientific Dataloggers (2MI-B)*
- *CURS100 100 Ohm Current Shunt Terminal Input Module*

8.1.2.4 Resistance Measurements — Details

Related Topics:
- Resistance Measurements — Specifications
- *Resistance Measurements — Overview* (p. 66)
- *Resistance Measurements — Details* (p. 319)
- *Resistance Measurements — Instructions* (p. 525)

By supplying a precise and known voltage to a resistive-bridge circuit and measuring the returning voltage, resistance can be calculated.

CRBasic instructions for measuring resistance include:

BrHalf() — half-bridge
BrHalf3W() — three-wire half-bridge
BrHalf4W() — four-wire half-bridge
BrFull() — four-wire full-bridge
BrFull6W() — six-wire full-bridge

Read More Available resistive-bridge completion modules are listed in the appendix *Signal Conditioners* (p. 623).

The CR800 has five CRBasic bridge-measurement instructions. Table *Resistive-Bridge Circuits with Voltage Excitation* (p. 320) shows ideal circuits and related equations. In the diagrams, resistors labeled R_s are normally the sensors and those labeled R_f are normally precision fixed (static) resistors. CRBasic example *Four-Wire Full-Bridge Measurement* (p. 322) lists CRBasic code that measures and processes four-wire full-bridge circuits.

Offset voltages compensation applies to bridge measurements. In addition to ***RevDiff*** and ***MeasOff*** parameters discussed in the section *Offset Voltage Compensation* (p. 315), CRBasic bridge measurement instructions include the ***RevEx*** parameter that provides the option to program a second set of measurements with the excitation polarity reversed. Much of the offset error inherent in bridge measurements is canceled out by setting ***RevDiff***, ***MeasOff***, and ***RevEx*** to ***True***.

Measurement speed can be slowed when using ***RevDiff***, ***MeasOff***, and ***RevEx***. When more than one measurement per sensor are necessary, such as occur with the **BrHalf3W()**, **BrHalf4W()**, and **BrFull6W** instructions, input and excitation reversal are applied separately to each measurement. For example, in the four-wire half-bridge (**BrHalf4W()**), when excitation is reversed, the differential measurement of the voltage drop across the sensor is made with excitation at both polarities and then excitation is again applied and reversed for the measurement of the voltage drop across the fixed resistor. Further, the results of measurement instructions (X) must be processed further to obtain the resistance value. This processing requires additional program execution time.

Table 66. Resistive-Bridge Circuits with Voltage Excitation

Resistive-Bridge Type and Circuit Diagram	***CRBasic Instruction and Fundamental Relationship***	***Other Relationships***
Half-Bridge[1] 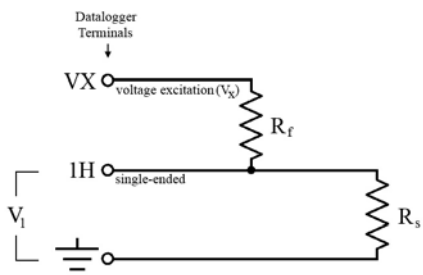 	CRBasic Instruction: **BrHalf()** Fundamental Relationship[2]: $X = \frac{V_1}{V_X} = \frac{R_s}{R_s + R_f}$	$R_s = R_f \frac{X}{1 - X}$ $R_f = \frac{R_s(1 - X)}{X}$
Three-Wire Half-Bridge[1,3] 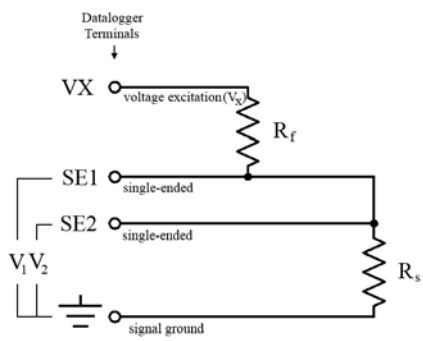 	CRBasic Instruction: **BrHalf3W()** Fundamental Relationship[2]: $X = \frac{2V_2 - V_1}{V_X - V_1} = \frac{R_s}{R_f}$	$R_f = R_s / X$ $R_s = R_f X$
Four-Wire Half-Bridge[1,3] 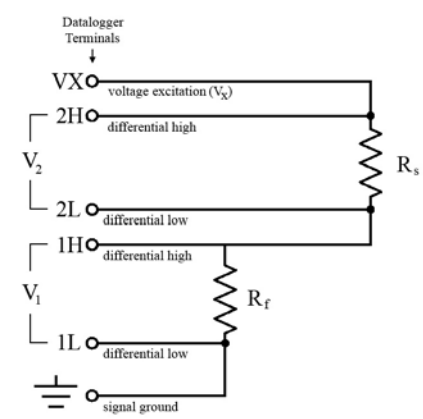 	CRBasic Instruction: **BrHalf4W()** Fundamental Relationship[2]: $X = \frac{V_2}{V_1} = \frac{R_s}{R_f}$	$R_s = R_f X$ $R_f = R_s / X$

Table 66. Resistive-Bridge Circuits with Voltage Excitation

Resistive-Bridge Type and Circuit Diagram	***CRBasic Instruction and Fundamental Relationship***	***Other Relationships***
Full-Bridge[1,3] 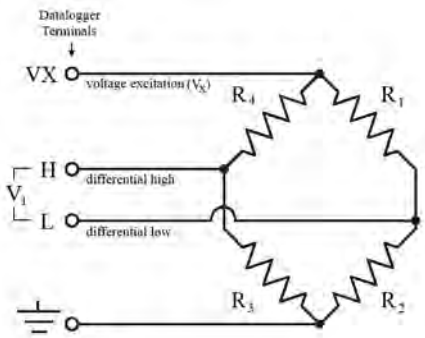 	CRBasic Instruction: **BrFull()** Fundamental Relationship[2]: $X = 1000\frac{V_1}{V_x}$ $= 1000\left(\frac{R_3}{R_3+R_4} - \frac{R_2}{R_1+R_2}\right)$	These relationships apply to **BrFull()** and **BrFull6W()**. $X_1 = \frac{-X}{1000} + \frac{R_3}{R_3+R_4}$ $R_1 = \frac{R_2(1-X_1)}{X_1}$ $R_2 = \frac{R_1X_1}{1-X_1}$
Six-Wire Full-Bridge[1] 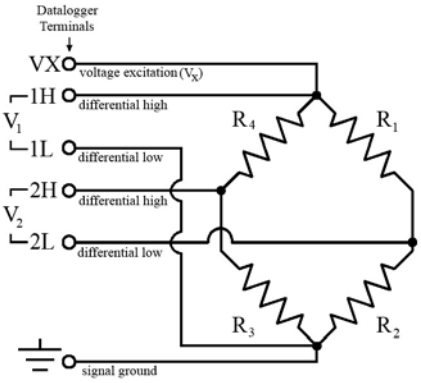 	CRBasic Instruction: **BrFull6W()** Fundamental Relationship[2]: $X = 1000\frac{V_2}{V_1}$ $= 1000\left(\frac{R_3}{R_3+R_4} - \frac{R_2}{R_1+R_2}\right)$	$X_2 = \frac{X}{1000} + \frac{R_2}{R_1+R_2}$ $R_3 = \frac{R_4X_2}{1-X_2}$ $R_4 = \frac{R_3(1-X_2)}{X_2}$

[1]Key: V_X = excitation voltage; V_1, V_2 = sensor return voltages; R_f = "fixed", "bridge" or "completion" resistor; R_s = "variable" or "sensing" resistor.
[2]Where X = result of the CRBasic bridge measurement instruction with a multiplier of 1 and an offset of 0.
[3]See the appendix *Resistive Bridge Modules* *(p. 623)* for a list of available terminal input modules to facilitate this measurement.

CRBasic Example 64. Four-Wire Full-Bridge Measurement and Processing

```
'This program example demonstrates the measurement and processing of a four-wire resistive
'full bridge.  In this example, the default measurement stored in variable X is
'deconstructed to determine the resistance of the R1 resistor, which is the variable
'resistor in most sensors that have a four-wire full-bridge as the active element.

'Declare Variables
Public X
Public X1
Public R1
Public R2 = 1000                                    'Resistance of fixed resistor R2
Public R3 = 1000                                    'Resistance of fixed resistor R2
Public R4 = 1000                                    'Resistance of fixed resistor R4

'Main Program
BeginProg
  Scan(500,mSec,1,0)

    'Full Bridge Measurement:
    BrFull(X,1,mV2500,1,Vx1,1,2500,True,True,0,_60Hz,1.0,0.0)
    X1 = ((-1 * X) / 1000) + (R3 / (R3 + R4))
    R1 = (R2 * (1 - X1)) / X1

  NextScan
EndProg
```

8.1.2.4.1 Ac Excitation

Some resistive sensors require ac excitation. Ac excitation is defined as excitation with equal positive (+) and negative (–) duration and magnitude. These include electrolytic tilt sensors, soil moisture blocks, water-conductivity sensors, and wetness-sensing grids. The use of single polarity dc excitation with these sensors can result in polarization of sensor materials and the substance measured. Polarization may cause erroneous measurement, calibration changes, or rapid sensor decay.

Other sensors, for example, LVDTs (linear variable differential transformers), require ac excitation because they require inductive coupling to provide a signal. Dc excitation in an LVDT will result in no measurement.

CRBasic bridge-measurement instructions have the option to reverse polarity to provide ac excitation by setting the ***RevEx*** parameter to ***True***.

Note Take precautions against ground loops when measuring sensors that require ac excitation. See *Ground Looping in Ionic Measurements* *(p. 107).*

8.1.2.4.2 Resistance Measurements — Accuracy

Read More Consult the following technical papers at *www.campbellsci.com/app-notes* (*http://www.campbellsci.com/app-notes*) for in-depth treatments of several topics addressing voltage measurement quality:

- *Preventing and Attacking Measurement Noise Problems*
- *Benefits of Input Reversal and Excitation Reversal for Voltage Measurements*
- *Voltage Measurement Accuracy, Self- Calibration, and Ratiometric Measurements*
- *Estimating Measurement Accuracy for Ratiometric Measurement Instructions.*

Note Error discussed in this section and error-related specifications of the CR800 do not include error introduced by the sensor or by the transmission of the sensor signal to the CR800.

The accuracy specifications for ratiometric-resistance measurements are summarized in the tables *Ratiometric-Resistance Measurement Accuracy* (p. 324).

Table 67. Ratiometric-Resistance Measurement Accuracy
–25 to 50 °C
±(0.04% of voltage measurement + offset)[1]
[1]Voltage measurement is variable V_1 or V_2 in the table *Resistive-Bridge Circuits with Voltage Excitation* (p. 320). Offset is the same as that for simple analog-voltage measurements. See the table *Analog-Voltage Measurement Offsets* (p. 305).

Assumptions that support the ratiometric-accuracy specification include:

- CR800 is within factory calibration specification.
- Excitation voltages less than 1000 mV are reversed during the excitation phase of the measurement.
- Effects due to the following are not included in the specification:
  - Bridge-resistor errors
  - Sensor noise
  - Measurement noise

For a tighter treatment of the accuracy of ratiometric measurements, consult the technical paper *Estimating Measurement Accuracy for Ratiometric Measurement Instructions*., which should be available at *www.campbellsci.com/app-notes* (*http://www.campbellsci.com/app-notes*) in June of 2015.

8.1.2.5 Strain Measurements — Details

Related Topics:
- *Strain Measurements — Overview* (p. 68)
- *Strain Measurements — Details* (p. 324)
- *FieldCalStrain() Examples* (p. 216)

A principal use of the four-wire full bridge is the measurement of strain gages in structural stress analysis. **StrainCalc()** calculates microstrain (με) from the formula for the particular strain bridge configuration used. All strain gages supported by **StrainCalc()** use the full-bridge schematic. In strain-gage parlance, 'quarter-bridge', 'half-bridge' and 'full-bridge' refer to the number of active elements in the full-bridge schematic. In other words, a quarter-bridge strain gage has one active element, a half-bridge has two, and a full-bridge has four.

StrainCalc() requires a bridge-configuration code. The table **StrainCalc()** *Instruction Equations* (p. 325) shows the equation used by each configuration code. Each code can be preceded by a dash (-). Use a code without the dash when the bridge is configured so the output decreases with increasing strain. Use a dashed code when the bridge is configured so the output increases with increasing strain. In the equations in table **StrainCalc()** *Instruction Equations* (p. 325), a dashed code

sets the polarity of V_r to negative.

Table 68. StrainCalc() **Instruction Equations**

StrainCalc() **BrConfig** ***Code***	***Configuration***
1	Quarter-bridge strain gage: $\mu\varepsilon = \frac{-4*10^6 V_r}{GF(1+2V_r)}$
2	Half-bridge strain gage. One gage parallel to strain, the other at 90° to strain. $\mu\varepsilon = \frac{-4*10^6 V_r}{GF[(1+\nu)-2V_r(\nu-1)]}$
3	Half-bridge strain gage. One gage parallel to $+\varepsilon$, the other parallel to $-\varepsilon$: $\mu\varepsilon = \frac{-2*10^6 Vr}{GF}$
4	Full-bridge strain gage. Two gages parallel to $+\varepsilon$, the other two parallel to $-\varepsilon$: $\mu\varepsilon = \frac{-10^6 Vr}{GF}$
5	Full-bridge strain gage. Half the bridge has two gages parallel to $+\varepsilon$ and $-\varepsilon$, and the other half to $+\nu\varepsilon$ and $-\nu\varepsilon$: $\mu\varepsilon = \frac{-2*10^6 Vr}{GF(\nu+1)}$
6	Full-bridge strain gage. Half the bridge has two gages parallel to $+\varepsilon$ and $-\nu\varepsilon$, and the other half to $-\nu\varepsilon$ and $+\varepsilon$: $\mu\varepsilon = \frac{-2*10^6 V_r}{GF[(\nu+1)-V_r(\nu-1)]}$

where:

- ν: Poisson's Ratio (0 if not applicable)
- GF: Gage Factor
- V_r: 0.001 (Source-Zero) if BRConfig code is positive (+)
- V_r: –0.001 (Source-Zero) if BRConfig code is negative (–)

and where:

- "source": the result of the full-bridge measurement ($X = 1000 \cdot V_1 / V_x$) when multiplier = 1 and offset = 0.
- "zero": gage offset to establish an arbitrary zero (see **FieldCalStrain()** in *FieldCal() Examples* (p. 207)).

StrainCalc Example: See *FieldCalStrain() Examples* (p. 216)

8.1.2.6 Auto-Calibration — Details

Related Topics
- *Auto Calibration — Overview* (p. 91)
- *Auto Calibration — Details* (p. 326)
- *Auto-Calibration — Errors* (p. 466)
- *Offset Voltage Compensation* (p. 315)
- *Factory Calibration* (p. 92)
- *Factory Calibration or Repair Procedure* (p. 452)

The CR800 auto-calibrates to compensate for changes caused by changing operating temperatures and aging. With auto-calibration disabled, measurement accuracy over the operational temperature range is specified as less accurate by a factor of 10. That is, over the extended temperature range of –40 °C to 85 °C, the accuracy specification of ±0.12% of reading can degrade to ±1% of reading with auto-calibration disabled. If the temperature of the CR800 remains the same, there is little calibration drift if auto-calibration is disabled. Auto-calibration can become disabled when the scan rate is too small. It can be disabled by the CRBasic program when using the **Calibrate()** instruction.

Note The CR800 is equipped with an internal voltage reference used for calibration. The voltage reference should be periodically checked and re-calibrated by Campbell Scientific for applications with critical analog voltage measurement requirements. A minimum two-year recalibration cycle is recommended.

Unless a **Calibrate()** instruction is present, the CR800 automatically auto-calibrates during spare time in the background as an automatic *slow sequence* (p. 155) with a segment of the calibration occurring every four seconds. If there is insufficient time to do the background calibration because of a scan-consuming user program, the CR800 will display the following warning at compile time: **Warning: Background calibration is disabled**.

8.1.2.6.1 Auto Calibration Process

The composite transfer function of the *PGIA* (p. 298) and *A-to-D* (p. 481) converter of the CR800 is described by the following equation:

$$\text{COUNTS} = G \cdot \text{Vin} + B$$

where COUNTS is the result from an A-to-D conversion, G is the voltage gain for a given input range, Vin is the input voltage connected to V+ and V–, and B is the internally measured offset voltage.

Automatic self-calibration calibrates only the G and B values necessary to run a given CRBasic program, resulting in a program dependent number of self-calibration segments ranging from a minimum of 6 to a maximum of 91. A typical number of segments required in self-calibration is 20 for analog ranges and one segment for the wiring-panel temperature measurement, totaling 21 segments. So, (21 segments) • (4 s / segment) = 84 s per complete self-calibration. The

worst-case is (91 segments) • (4 s / segment) = 364 s per complete self-calibration.

During instrument power-up, the CR800 computes calibration coefficients by averaging ten complete sets of self-calibration measurements. After power up, newly determined G and B values are low-pass filtered as follows:

Next_Value = (1/5) • (new value) + (4/5) • (old value)

This results in the following settling percentages:

- 20% for 1 new value,
- 49% for 3 new values
- 67% for 5 new values
- 89% for 10 new values
- 96% for 14 new values

If this rate of update is too slow, the **Calibrate()** instruction can be used. The **Calibrate()** instruction computes the necessary G and B values every scan without any low-pass filtering.

For a **VoltSe()** instruction, B is determined as part of self-calibration only if the parameter ***MeasOff* = *0***. An exception is B for **VoltSe()** on the ±2500 input range with a 250 µs integration, which is always determined in self-calibration for use internally. For a **VoltDiff()** instruction, B is determined as part of self-calibration only if the parameter ***RevDiff* = *0***.

VoltSe() and **VoltDiff()** instructions, on a given input range with the same integration durations, use the same G values but different B values. The six input-voltage ranges (±5000 mV, ±2500 mV, ±250 mV, and ±25 mV), in combination with the three most common integration durations (250 µs, 50 Hz half-cycle, and 60 Hz half-cycle) result in a maximum of 18 different gains (G), and 18 offsets for **VoltSe()** measurements (B), and 18 offsets for **VoltDiff()** measurements (B) to be determined during CR800 self-calibration (maximum of 54 values). These values can be viewed in the **Status** table, with entries identified as listed in table *Status Table Calibration Entries* *(p. 328).*

Automatic self-calibration can be overridden with the **Calibrate()** instruction, which forces a calibration for each execution, and does not employ low-pass filtering on the newly determined G and B values. The **Calibrate()** instruction has two parameters: ***CalRange*** and ***Dest***. ***CalRange*** determines whether to calibrate only the necessary input ranges for a given CRBasic program (***CalRange*** = 0) or to calibrate all input ranges (***CalRange*** ≠ 0). The ***Dest*** parameter should be of sufficient dimension for all returned G and B values, which is a minimum of two for the automatic self-calibration of **VoltSE()** including B (offset) for the ±2500 mV input range with first 250 µs integration, and a maximum of 54 for all input-voltage ranges used and possible integration durations.

An example use of the **Calibrate()** instruction programmed to calibrate all input ranges is given in the following CRBasic code snip:

```
'Calibrate(Dest,Range)
Calibrate(cal(1),true)
```

where ***Dest*** is an array of 54 variables, and ***Range* ≠ *0*** to calibrate all input ranges. Results of this command are listed in the table **Calibrate()** *Instruction Results* *(p. 329).*

Table 69. Auto Calibration Gains and Offsets

Status Table Element	Descriptions of Status Table Elements			
	Differential (Diff) Single-Ended (SE)	Offset or Gain	±mV Input Range	Integration
CalGain(1)		Gain	5000	250 ms
CalGain(2)		Gain	2500	250 ms
CalGain(3)		Gain	250	250 ms
CalGain(4)		Gain	25	250 ms
CalGain(5)		Gain	7.5	250 ms
CalGain(6)		Gain	2.5	250 ms
CalGain(7)		Gain	5000	60 Hz Rejection
CalGain(8)		Gain	2500	60 Hz Rejection
CalGain(9)		Gain	250	60 Hz Rejection
CalGain(10)		Gain	25	60 Hz Rejection
CalGain(11)		Gain	7.5	60 Hz Rejection
CalGain(12)		Gain	2.5	60 Hz Rejection
CalGain(13)		Gain	5000	50 Hz Rejection
CalGain(14)		Gain	2500	50 Hz Rejection
CalGain(15)		Gain	250	50 Hz Rejection
CalGain(16)		Gain	25	50 Hz Rejection
CalGain(17)		Gain	7.5	50 Hz Rejection
CalGain(18)		Gain	2.5	50 Hz Rejection
CalSeOffset(1)	SE	Offset	5000	250 ms
CalSeOffset(2)	SE	Offset	2500	250 ms
CalSeOffset(3)	SE	Offset	250	250 ms
CalSeOffset(4)	SE	Offset	25	250 ms
CalSeOffset(5)	SE	Offset	7.5	250 ms
CalSeOffset(6)	SE	Offset	2.5	250 ms
CalSeOffset(7)	SE	Offset	5000	60 Hz Rejection
CalSeOffset(8)	SE	Offset	2500	60 Hz Rejection
CalSeOffset(9)	SE	Offset	250	60 Hz Rejection
CalSeOffset(10)	SE	Offset	25	60 Hz Rejection
CalSeOffset(11)	SE	Offset	7.5	60 Hz Rejection
CalSeOffset(12)	SE	Offset	2.5	60 Hz Rejection
CalSeOffset(13)	SE	Offset	5000	50 Hz Rejection
CalSeOffset(14)	SE	Offset	2500	50 Hz Rejection
CalSeOffset(15)	SE	Offset	250	50 Hz Rejection

Table 69. Auto Calibration Gains and Offsets

Status Table Element	Descriptions of Status Table Elements			
	Differential (Diff) Single-Ended (SE)	Offset or Gain	±mV Input Range	Integration
CalSeOffset(16)	SE	Offset	25	50 Hz Rejection
CalSeOffset(17)	SE	Offset	7.5	50 Hz Rejection
CalSeOffset(18)	SE	Offset	2.5	50 Hz Rejection
CalDiffOffset(1)	Diff	Offset	5000	250 ms
CalDiffOffset(2)	Diff	Offset	2500	250 ms
CalDiffOffset(3)	Diff	Offset	250	250 ms
CalDiffOffset(4)	Diff	Offset	25	250 ms
CalDiffOffset(5)	Diff	Offset	7.5	250 ms
CalDiffOffset(6)	Diff	Offset	2.5	250 ms
CalDiffOffset(7)	Diff	Offset	5000	60 Hz Rejection
CalDiffOffset(8)	Diff	Offset	2500	60 Hz Rejection
CalDiffOffset(9)	Diff	Offset	250	60 Hz Rejection
CalDiffOffset(10)	Diff	Offset	25	60 Hz Rejection
CalDiffOffset(11)	Diff	Offset	7.5	60 Hz Rejection
CalDiffOffset(12)	Diff	Offset	2.5	60 Hz Rejection
CalDiffOffset(13)	Diff	Offset	5000	50 Hz Rejection
CalDiffOffset(14)	Diff	Offset	2500	50 Hz Rejection
CalDiffOffset(15)	Diff	Offset	250	50 Hz Rejection
CalDiffOffset(16)	Diff	Offset	25	50 Hz Rejection
CalDiffOffset(17)	Diff	Offset	7.5	50 Hz Rejection
CalDiffOffset(18)	Diff	Offset	2.5	50 Hz Rejection

Table 70. Calibrate() **Instruction Results**

Array Cal() Element	Descriptions of Array Elements				Typical Value
	Differential (Diff) Single-Ended (SE)	Offset or Gain	±mV Input Range	Integration	
1	SE	Offset	5000	250 ms	±5 LSB
2	Diff	Offset	5000	250 ms	±5 LSB
3		Gain	5000	250 ms	–1.34 mV/LSB
4	SE	Offset	2500	250 ms	±5 LSB
5	Diff	Offset	2500	250 ms	±5 LSB
6		Gain	2500	250 ms	–0.67 mV/LSB
7	SE	Offset	250	250 ms	±5 LSB
8	Diff	Offset	250	250 ms	±5 LSB
9		Gain	250	250 ms	–0.067 mV/LSB

Table 70. Calibrate() **Instruction Results**

Array Cal() Element	Descriptions of Array Elements				Typical Value
	Differential (Diff) Single-Ended (SE)	Offset or Gain	±mV Input Range	Integration	
10	SE	Offset	25	250 ms	±5 LSB
11	Diff	Offset	25	250 ms	±5 LSB
12		Gain	25	250 ms	–0.0067 mV/LSB
13	SE	Offset	7.5	250 ms	±10 LSB
14	Diff	Offset	7.5	250 ms	±10 LSB
15		Gain	7.5	250 ms	–0.002 mV/LSB
16	SE	Offset	2.5	250 ms	±20 LSB
17	Diff	Offset	2.5	250 ms	±20 LSB
18		Gain	2.5	250 ms	–0.00067 mV/LSB
19	SE	Offset	5000	60 Hz Rejection	±5 LSB
20	Diff	Offset	5000	60 Hz Rejection	±5 LSB
21		Gain	5000	60 Hz Rejection	–0.67 mV/LSB
22	SE	Offset	2500	60 Hz Rejection	±5 LSB
23	Diff	Offset	2500	60 Hz Rejection	±5 LSB
24		Gain	2500	60 Hz Rejection	–0.34 mV/LSB
25	SE	Offset	250	60 Hz Rejection	±5 LSB
26	Diff	Offset	250	60 Hz Rejection	±5 LSB
27		Gain	250	60 Hz Rejection	–0.067 mV/LSB
28	SE	Offset	25	60 Hz Rejection	±5 LSB
29	Diff	Offset	25	60 Hz Rejection	±5 LSB
30		Gain	25	60 Hz Rejection	–0.0067 mV/LSB
31	SE	Offset	7.5	60 Hz Rejection	±10 LSB
32	Diff	Offset	7.5	60 Hz Rejection	±10 LSB
33		Gain	7.5	60 Hz Rejection	–0.002 mV/LSB
34	SE	Offset	2.5	60 Hz Rejection	±20 LSB
35	Diff	Offset	2.5	60 Hz Rejection	±20 LSB
36		Gain	2.5	60 Hz Rejection	–0.00067 mV/LSB
37	SE	Offset	5000	50 Hz Rejection	±5 LSB
38	Diff	Offset	5000	50 Hz Rejection	±5 LSB
39		Gain	5000	50 Hz Rejection	–0.67 mV/LSB
40	SE	Offset	2500	50 Hz Rejection	±5 LSB
41	Diff	Offset	2500	50 Hz Rejection	±5 LSB
42		Gain	2500	50 Hz Rejection	–0.34 mV/LSB
43	SE	Offset	250	50 Hz Rejection	±5 LSB

Table 70. Calibrate() **Instruction Results**

Array Cal() Element	Descriptions of Array Elements				Typical Value
	Differential (Diff) Single-Ended (SE)	Offset or Gain	±mV Input Range	Integration	
44	Diff	Offset	250	50 Hz Rejection	±5 LSB
45		Gain	250	50 Hz Rejection	–0.067 mV/LSB
46	SE	Offset	25	50 Hz Rejection	±5 LSB
47	Diff	Offset	25	50 Hz Rejection	±5 LSB
48		Gain	25	50 Hz Rejection	–0.0067 mV/LSB
49	SE	Offset	7.5	50 Hz Rejection	±10 LSB
50	Diff	Offset	7.5	50 Hz Rejection	±10 LSB
51		Gain	7.5	50 Hz Rejection	–0.002 mV/LSB
52	SE	Offset	2.5	50 Hz Rejection	±20 LSB
53	Diff	Offset	2.5	50 Hz Rejection	±20 LSB
54		Gain	2.5	50 Hz Rejection	–0.00067 mV/LSB

8.1.3 Pulse Measurements — Details

Related Topics:
- Pulse Measurements — Specifications
- *Pulse Measurements — Overview* (p. 68)
- *Pulse Measurements — Details* (p. 331)
- *Pulse Measurements — Instructions* (p. 527)

Read More Review the *PULSE COUNTERS* (p. 331) and Pulse on C Terminals sections in *CR800 Specifications* (p. 95). Review pulse measurement programming in *CRBasic Editor Help* for the **PulseCount()** and **TimerIO()** instructions.

Note Peripheral devices are available from Campbell Scientific to expand the number of pulse-input channels measured by the CR800. Refer to the appendix *Measurement and Control Peripherals Lists* (p. 348) for more information.

The figure *Pulse-Sensor Output-Signal Types* (p. 69) illustrates pulse signal types measurable by the CR800:

- low-level ac
- high-frequency
- switch-closure

The figure *Switch-Closure Schematic* (p. 332) illustrates the basic internal circuit and the external connections of a switch-closure pulse sensor. The table *Pulse Measurements: Terminals and Programming* (p. 332) summarizes available measurements, terminals available for those measurements, and the CRBasic instructions used. The number of terminals configurable for pulse input is determined from the table *CR800 Terminal Definitions* (p. 76).

Figure 86. Pulse-Sensor Output-Signal Types

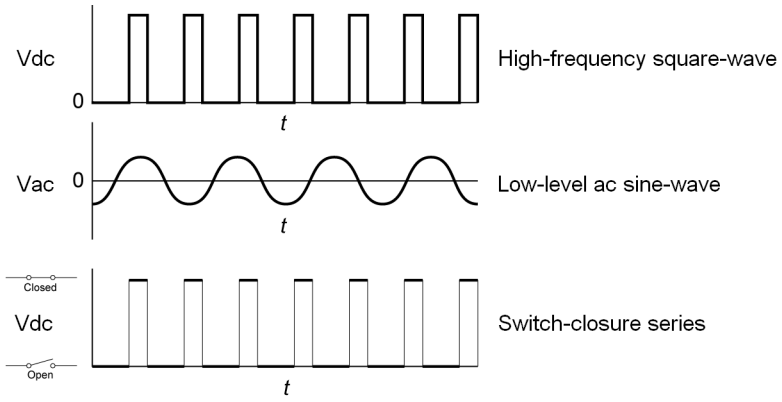

Figure 87. Switch-Closure Pulse Sensor

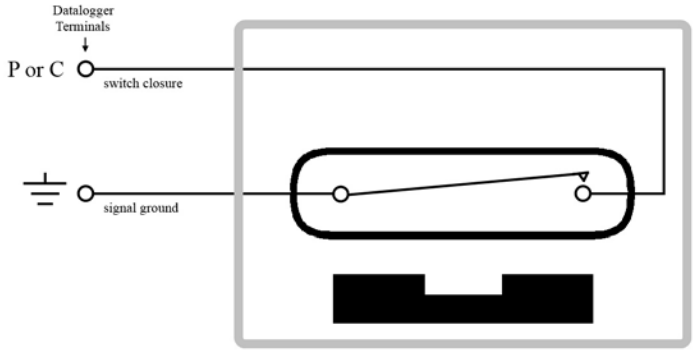

Figure 88. Terminals Configurable for Pulse Input

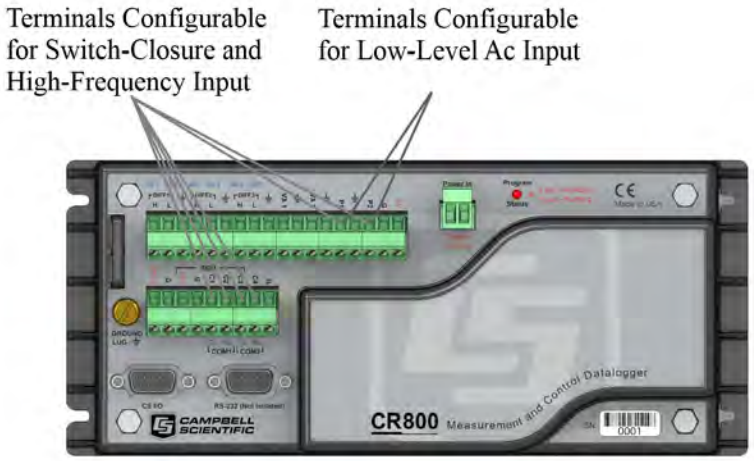

Table 71. Pulse Measurements:, Terminals and Programming			
Measurement	***P Terminals***	***C Terminals***	***CRBasic Instruction***
Low-level ac, counts	✓		**PulseCount()**
Low-level ac, Hz	✓		
Low-level ac, running average	✓		
High frequency, counts	✓	✓	
High frequency, Hz	✓	✓	
High frequency, running average	✓	✓	
Switch closure, counts	✓	✓	
Switch closure, Hz	✓	✓	
Switch closure, running average	✓	✓	
Calculated period		✓	**TimerIO()**
Calculated frequency		✓	
Time from edge on previous port		✓	
Time from edge on port 1		✓	
Count of edges		✓	
Pulse count, period		✓	
Pulse count, frequency		✓	

8.1.3.1 Pulse Measurement Terminals

P Terminals

- Input voltage range = –20 to 20 V

If pulse input voltages exceed ±20 V, third-party external-signal conditioners should be employed. Contact a Campbell Scientific application engineer if assistance is needed. Under no circumstances should voltages greater than 50 V be measured.

C Terminals

- Input voltage range = –8 to 16 Vdc

C terminals configured for pulse input have a small 25 ns input RC-filter time constant between the terminal block and the CMOS input buffer, which allows for high-frequency pulse measurements up to 250 kHz and edge counting up to 400 kHz. The CMOS input buffer recognizes inputs ≥3.8 V as being high and inputs ≤1.2 V as being low.

Open-collector (bipolar transistors) or open-drain (MOSFET) sensors are typically measured as frequency sensors. **C** terminals can be conditioned for open collector or open drain with an external pull-up resistor as shown in figure Using a Pull-up Resistor on C terminals. The pull-up resistor counteracts an internal 100

kΩ pull-down resistor, allowing inputs to be pulled to >3.8 V for reliable measurements.

8.1.3.2 Low-Level Ac Measurements — Details

Related Topics:
- *Low-Level Ac Input Modules — Overview* (p. 348)
- *Low-Level Ac Measurements — Details* (p. 334)
- *Pulse Input Modules — Lists* (p. 622)

Low-level ac (sine-wave) signals can be measured on **P** terminals. Sensors that commonly output low-level ac include:

- Ac generator anemometers

Measurements include the following:

- Counts
- Frequency (Hz)
- Running average

Rotating magnetic-pickup sensors commonly generate ac voltage ranging from thousandths of volts at low-rotational speeds to several volts at high-rotational speeds. Terminals configured for low-level ac input have in-line signal conditioning for measuring signals ranging from 20 mV RMS (±28 mV peak-to-peak) to 14 V RMS (±20 V peak-to-peak).

P Terminals

- Maximum input frequency is dependent on input voltage:
  - 1.0 to 20 Hz at 20 mV RMS
  - 0.5 to 200 Hz at 200 mV RMS
  - 0.3 to 10 kHz at 2000 mV RMS
  - 0.3 to 20 kHz at 5000 mV RMS
- CRBasic instruction: **PulseCount()**

Internal ac coupling is used to eliminate dc-offset voltages of up to ±0.5 Vdc.

C Terminals

Low-level ac signals cannot be measured directly by **C** terminals. Refer to the appendix *Pulse Input Modules List* (p. 622) for information on peripheral terminal expansion modules available for converting low-level ac signals to square-wave signals.

8.1.3.3 High-Frequency Measurements

High-frequency (square-wave) signals can be measured on **P** or **C** terminals. Common sensors that output high-frequency include:

- Photo-chopper anemometers
- Flow meters

Measurements include counts, frequency in hertz, and running average. Refer to the section *Frequency Resolution* (p. 335) for information about how the resolution

of a frequency measurement can be different depending on whether the measurement is made with the **PulseCount()** or **TimerIO()** instruction.

P Terminals

- Maximum input frequency = 250 kHz
- CRBasic instructions: **PulseCount()**

High-frequency pulse inputs are routed to an inverting CMOS input buffer with input hysteresis. The CMOS input buffer is at output **0** level with inputs ≥ 2.2 V and at output **1** level with inputs ≤ 0.9 V. An internal 100 kΩ resistor is automatically connected to the terminal to pull it up to 5 Vdc. This pull-up resistor accommodates open-collector (open-drain) output devices.

C Terminals

- Maximum input frequency = <1 kHz
- CRBasic instructions: **PulseCount(), TimerIO()**

8.1.3.3.1 Frequency Resolution

Resolution of a frequency measurement made with the **PulseCount()** instruction is calculated as

$$FR = \frac{1}{S}$$

where

FR = resolution of the frequency measurement (Hz)
S = scan interval of CRBasic program

Resolution of a frequency measurement made with the **TimerIO()** instruction is

$$FR = \frac{R/E}{P * (P+(R/E))}$$

where

FR = frequency resolution of the measurement (Hz)
R = timing resolution of the **TimerIO()** measurement = 540 ns
P = period of input signal (seconds). For example, P = 1 / 1000 Hz = 0.001 s
E = Number of rising edges per scan or 1, whichever is greater.

Table 72. Example. E for a 10 Hz input signal

Scan	*Rising Edge / Scan*	*E*
5.0	50	50
0.5	5	5
0.05	0.5	1

TimerIO() instruction measures frequencies of ≤ 1 kHz with higher frequency resolution over short (sub-second) intervals. In contrast, sub-second frequency measurement with **PulseCount()** produce measurements of lower resolution. Consider a 1 kHz input. Table *Frequency Resolution Comparison* *(p. 336)* lists frequency resolution to be expected for a 1 kHz signal measured by **TimerIO()** and **PulseCount()** at 0.5 s and 5.0 s scan intervals.

Increasing a measurement interval from 1 s to 10 s, either by increasing the scan interval (when using **PulseCount()**) or by averaging (when using **PulseCount()** or **TimerIO()**), improves the resulting frequency resolution from 1 Hz to 0.1 Hz. Averaging can be accomplished by the **Average()**, **AvgRun()**, and **AvgSpa()** instructions. Also, **PulseCount()** has the option of entering a number greater than ***1*** in the ***POption*** parameter. Doing so enters an averaging interval in milliseconds for a direct running-average computation. However, use caution when averaging. Averaging of any measurement reduces the certainty that the result truly represents a real aspect of the phenomenon being measured.

Table 73. Frequency Resolution Comparison

	0.5 s Scan	***5.0 s Scan***
PulseCount(), ***POption=1***	FR = 2 Hz	FR = 0.2 Hz
TimerIO(), ***Function=2***	FR = 0.0011 Hz	FR = 0.00011 Hz

8.1.3.3.2 Frequency Measurement Q & A

Q: When more than one pulse is in a scan interval, what does **TimerIO()** return when configured for a frequency measurement? Does it average the measured periods and compute the frequency from that (f = 1/T)? For example,

```
Scan(50,mSec,10,0)
  TimerIO(WindSpd(),11111111,00022000,60,Sec)
```

A: In the background, a 32-bit-timer counter is saved each time the signal transitions as programmed (rising or falling). This counter is running at a fixed high frequency. A count is also incremented for each transition. When the **TimerIO()** instruction executes, it uses the difference of time between the edge prior to the last execution and the edge prior to this execution as the time difference. The number of transitions that occur between these two times divided by the time difference gives the calculated frequency. For multiple edges occurring between execution intervals, this calculation does assume that the frequency is not varying over the execution interval. The calculation returns the average regardless of how the signal is changing.

8.1.3.4 Switch-Closure and Open-Collector Measurements

Switch-closure and open-collector signals can be measured on **P** or **C** terminals. Mechanical-switch closures have a tendency to bounce before solidly closing. Unless filtered, bounces can cause multiple counts per event. The CR800 automatically filters bounce. Because of the filtering, the maximum switch-closure frequency is less than the maximum high-frequency measurement frequency. Sensors that commonly output a switch-closure or open-collector signal include:

- Tipping-bucket rain gages
- Switch-closure anemometers
- Flow meters

Data output options include counts, frequency (Hz), and running average.

P Terminals

An internal 100 kΩ pull-up resistor pulls an input to 5 Vdc with the switch open, whereas a switch closure to ground pulls the input to 0 V. An internal hardware debounce filter has a 3.3 ms time-constant. Connection configurations are illustrated in table *Switch Closures and Open Collectors on P Terminals* *(p. 338).*

- Maximum input frequency = 90 Hz
- CRBasic instruction: **PulseCount()**

C Terminals

Switch-closure mode is a special case edge-count function that measures dry-contact-switch closures or open collectors. The operating system filters bounces. Connection configurations are illustrated in table *Switch Closures and Open Collectors on C Terminals* *(p. 338).*

- Maximum input frequency = 150 Hz
- CRBasic instruction: **PulseCount()**

8.1.3.5 Edge Timing

Edge time and period can be measured on **P** or **C** terminals. Applications for edge timing include:

- Measurements for feedback control using pulse-width or pulse-duration modulation (PWM/PDM).

Measurements include time between edges expressed as frequency (Hz) or period (µs).

C Terminals

- Maximum input frequency <1 kHz
- CRBasic instruction: **TimerIO()**
- Rising or falling edges of a square-wave signal are detected:
  - Rising edge — transition from <1.5 Vdc to >3.5 Vdc.
  - Falling edge — transition from >3.5 Vdc to <1.5 Vdc.
- Edge-timing resolution is approximately 540 ns.

8.1.3.6 Edge Counting

Edge counts can be measured on **C** terminals.

C Terminals

- Maximum input frequency 400 kHz
- CRBasic instruction: **TimerIO()**
- Rising or falling edges of a square-wave signal are detected:
  - Rising edge — transition from <1.5 Vdc to >3.5 Vdc.
  - Falling edge — transition from >3.5 Vdc to <1.5 Vdc.

8.1.3.7 Pulse Measurement Tips

Basic connection of pulse-output sensors is illustrated in table *Switch Closures and Open Collectors* (p. 338, p. 338)

The **PulseCount()** instruction, whether measuring pulse inputs on **P** or **C** terminals, uses dedicated 24-bit counters to accumulate all counts over the programmed scan interval. The resolution of pulse counters is one count or 1 Hz. Counters are read at the beginning of each scan and then cleared. Counters will overflow if accumulated counts exceed 16,777,216, resulting in erroneous measurements.

- Counts are the preferred **PulseCount()** output option when measuring the number of tips from a tipping-bucket rain gage or the number of times a door opens. Many pulse-output sensors, such as anemometers and flow meters, are calibrated in terms of frequency (*Hz* (p. 491)) so are usually measured using the **PulseCount()** frequency-output option.
- Accuracy of **PulseCount()** is limited by a small scan-interval error of ±(3 ppm of scan interval + 10 µs), plus the measurement resolution error of ±1 / (scan interval). The sum is essentially ±1 / (scan interval).
- Use the *LLAC4* (p. 622) module to convert non-TTL-level signals, including low-level ac signals, to TTL levels for input into **C** terminals.
- As shown in the table *Switch Closures and Open Collectors on C Terminals* (p. 338), **C** terminals, with regard to the 6.2 V Zener diode, have an input resistance of 100 kΩ with input voltages < 6.2 Vdc. For input voltages ≥ 6.2 Vdc, **C** terminals have an input resistance of only 220 Ω.

Table 74. Switch Closures and Open Collectors on P Terminals

Switch Closure on **P** *Terminal*	*Open Collector on on* **P** *Terminal*
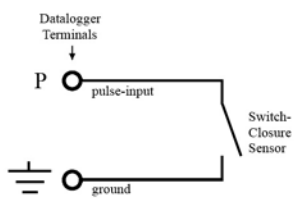	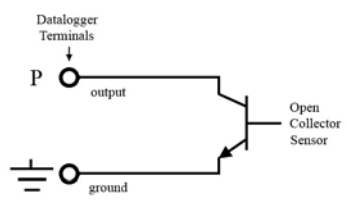

Table 75. Switch Closures and Open Collectors on C Terminals

Switch Closure on **C** *Terminal: No Pull-Up*

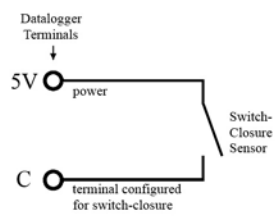

*Switch Closure on **C** Terminal:*
5 Vdc Pull-Up

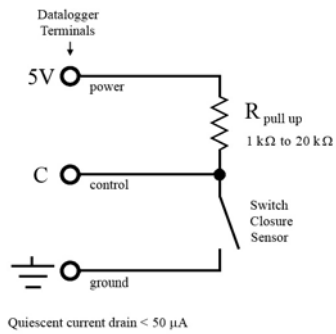

*Open Collector on **C** Terminal:*
5 Vdc Pull-Up

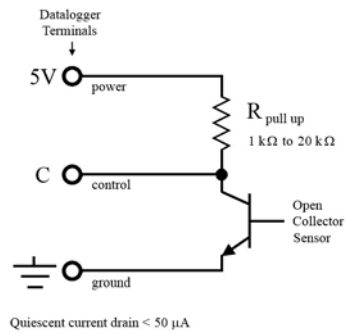

*Switch Closure on **C** Terminal:*
12 Vdc Pull-Up

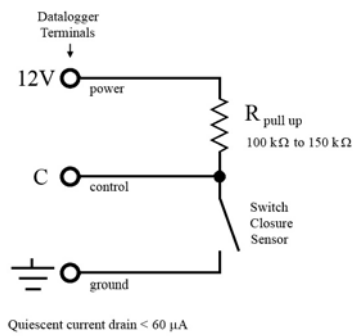

*Open Collector on **C** Terminal:*
12 Vdc pull-up

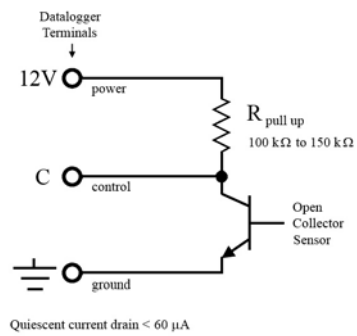

Internal CR800 circuitry that supports open-collector
and switch-closure measurements (FYI)

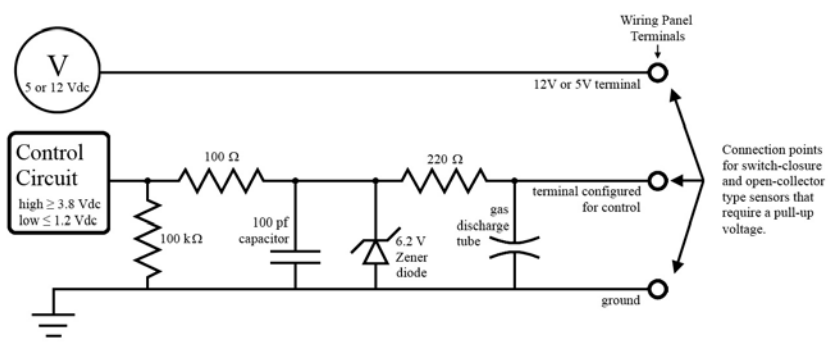

- Pay attention to specifications. Take time to understand the signal to be measured and compatible input terminals and CRBasic instructions. The table *Three Differing Specifications Between P and C Terminals* (p. 340) compares specifications for pulse-input terminals to emphasize the need for matching the proper device to the application.

Table 76. Three Specifications Differing Between P and C Terminals		
	P Terminal	***C Terminal***
High-Frequency Maximum	250 kHz	400 kHz
Input Voltage Maximum	20 Vdc	16 Vdc
State Transition Thresholds	Count upon transition from <0.9 Vdc to >2.2 Vdc	Count upon transition from <1.2 Vdc to >3.8 Vdc

8.1.3.7.1 TimerIO() NAN Conditions

- **NAN** will be the result of a **TimerIO()** measurement if one of two conditions occurs:
  - Timeout expires
  - The signal frequency is too fast (> 3 KHz). When a **C** terminal experiences a too fast frequency, the CR800 operating system disables the interrupt that is capturing the precise time until the next scan is serviced. This is done so that the CR800 processor does not get occupied by excessive interrupts. A small RC filter retrofitted to the sensor switch should fix the problem.

8.1.3.7.2 Input Filters and Signal Attenuation

P and **C** terminals are equipped with pulse-input filters to reduce electronic noise that can cause false counts. The higher the time constant (τ) of the filter, the tighter the filter. The table *Time Constants* (p. 340) lists τ values. So, while a **C** terminal measured with the **TimerIO()** frequency measurement may be superior for clean signals, a **P** terminal filter (much higher τ) may be required to get a measurement on an electronically noisy signal.

Input filters attenuate the amplitude (voltage) of the signal. The amount of attenuation is a function of the frequency passing through the filter. Higher-frequency signals are attenuated more. If a signal is attenuated enough, it may not pass the state transition thresholds required by the detection device as listed in table *Pulse-Input Terminals and Measurements* (p. 69)). To avoid over attenuation, sensor-output voltage must be increased at higher frequencies. For example, table *Low-Level Ac Filter Attenuation* (p. 341) shows that increasing voltage is required for low-level ac inputs to overcome filter attenuation on **P** terminals configured for low-level ac: 8.5 ms time constant filter (19 Hz 3 dB frequency) for low-amplitude signals; 1 ms time constant (159 Hz 3 dB frequency) for larger (> 0.7 V) amplitude signals.

For **P** terminals, an RC input filter with an approximate 1 µs time constant precedes the inverting CMOS input buffer. The resulting amplitude reduction is illustrated in figure *Amplitude Reduction of Pulse-Count Waveform* (p. 341). For a 0 to 5 Vdc square wave input to a pulse terminal, the maximum frequency that can be counted in high-frequency mode is approximately 250 kHz.

Table 77. Time Constants (τ)	
Measurement	***τ***
P terminal low-level ac mode	See footnote of the table *Filter Attenuation of Frequency Signals* (p. 341)
P terminal high-frequency mode	1.2
P terminal switch-closure mode	3300
C terminal high-frequency mode	0.025
C terminal switch-closure mode	0.025

Table 78. Low-Level Ac Amplitude and Maximum Measured Frequency	
Ac mV (RMS)	***Maximum Frequency***
20	20
200	200
2000	10,000
5000	20,000

Figure 89. Amplitude reduction of pulse-count waveform (before and after 1 µs µs time-constant filter)

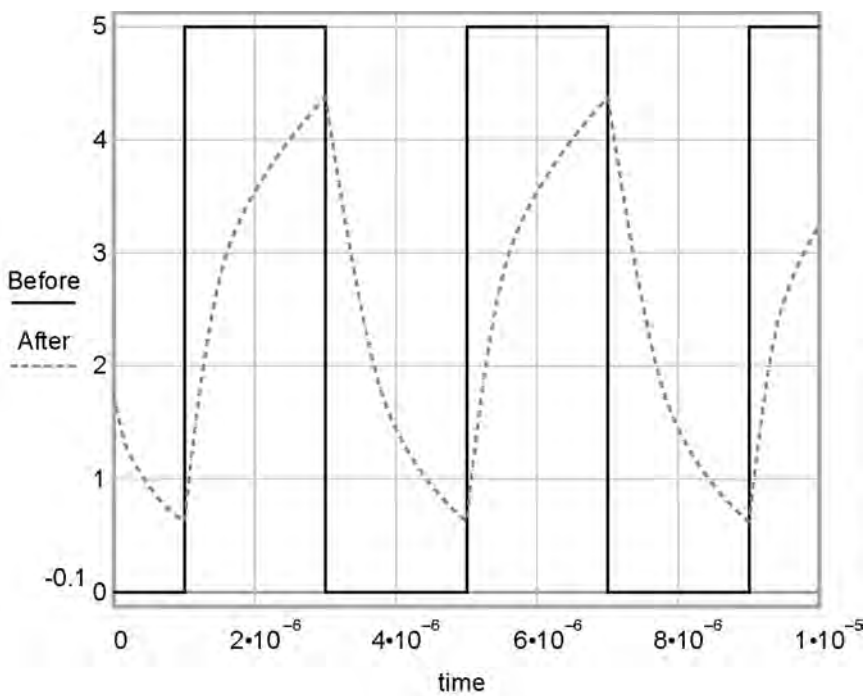

8.1.4 Period Averaging — Details

Related Topics:
- Period Averaging — Specifications
- *Period Averaging — Overview* (p. 70)
- *Period Averaging — Details* (p. 341)

The CR800 can measure the period of a signal on a **SE** terminal. The specified number of cycles is timed with a resolution of 136 ns, making the resolution of the period measurement 136 ns ns divided by the number of cycles chosen.

Low-level signals are amplified prior to a voltage comparator. The internal voltage comparator is referenced to the programmed threshold. The threshold parameter allows referencing the internal voltage comparator to voltages other than 0 V. For example, a threshold of 2500 mV allows a 0 to 5 Vdc digital signal to be sensed by the internal comparator without the need of any additional input conditioning circuitry. The threshold allows direct connection of standard digital signals, but it is not recommended for small amplitude sensor signals. For sensor amplitudes less than 20 mV peak-to-peak, a dc blocking capacitor is recommended to center the signal at CR800 ground (threshold = 0) because of offset voltage drift along with limited accuracy (±10 mV) and resolution (1.2 mV) of a threshold other than zero. Figure *Input Conditioning Circuit for Period Averaging* (p. 342) shows an example circuit.

The minimum pulse-width requirements increase (maximum frequency decreases) with increasing gain. Signals larger than the specified maximum for a range will saturate the gain stages and prevent operation up to the maximum specified frequency. As shown, back-to-back diodes are recommended to limit large amplitude signals to within the input signal ranges.

Caution Noisy signals with slow transitions through the voltage threshold have the potential for extra counts around the comparator switch point. A voltage comparator with 20 mV of hysteresis follows the voltage gain stages. The effective input-referred hysteresis equals 20 mV divided by the selected voltage gain. The effective input referred hysteresis on the ± 25 mV range is 2 mV; consequently, 2 mV of noise on the input signal could cause extraneous counts. For best results, select the largest input range (smallest gain) that meets the minimum input signal requirements.

Figure 90. Input Conditioning Circuit for Period Averaging

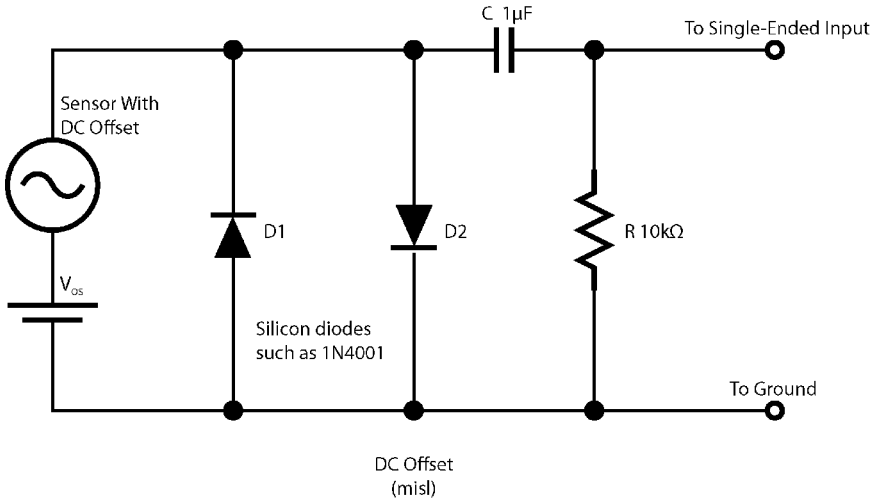

8.1.5 Vibrating-Wire Measurements — Details

Related Topics:
- Vibrating-Wire Measurements — Specifications
- *Vibrating-Wire Measurements — Overview* (p. 71)
- *Vibrating-Wire Measurements — Details* (p. 343)

The CR800 can measure vibrating-wire or vibrating-strip sensors, including strain gages, pressure transducers, piezometers, tilt meters, crack meters, and load cells. These sensors are used in structural, hydrological, and geotechnical applications because of their stability, accuracy, and durability. The CR800 can measure vibrating-wire sensors through specialized interface modules. More sensors can be measured by using multiplexers (see *Analog Multiplexers* (p. 622)).

The figure *Vibrating-Wire Sensor* (p. 343) illustrates basic construction of a sensor. To make a measurement, plucking and pickup coils are excited with a *swept frequency* (p. 504). The ideal behavior then is that all non-resonant frequencies quickly decay, and the resonant frequency continues. As the resonant frequency cuts the lines of flux in the pickup coil, the same frequency is induced on the signal wires in the cable connecting the sensor to the CR800 or interface.

Measuring the resonant frequency by means of period averaging is the classic technique, but Campbell Scientific has developed static and dynamic spectral-analysis techniques (*Vspect* (p. 506)*t*™) that produce superior noise rejection, higher resolution, diagnostic data, and, in the case of dynamic Vspect, measurements up to 333.3 Hz.

A resistive-thermometer device (thermistor or RTD), which is included in most vibrating-wire sensor housings, can be measured to compensate for temperature errors in the measurement.

Figure 91. Vibrating-Wire Sensor

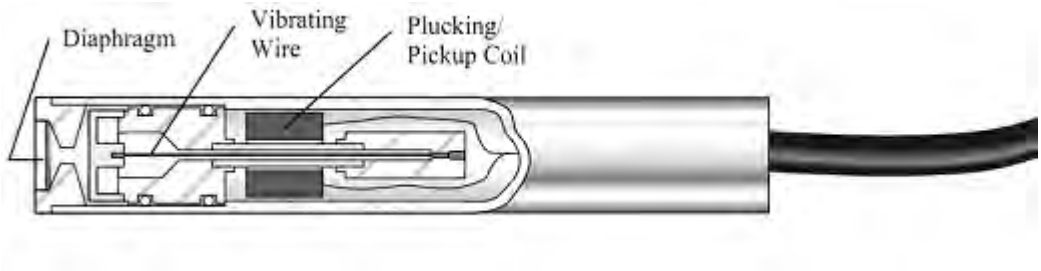

8.1.5.1 Time-Domain Measurement

Although obsolete in many applications, time-domain period-averaging vibrating-wire measurements can be made on **H L** terminals. The **VibratingWire()** instruction makes the measurement. Measurements can be made directly on these terminals, but usually are made through a vibrating-wire interface that amplifies and conditions the vibrating-wire signal and provides inputs for embedded thermistors or RTDs. Interfaces of this type are no longer available from Campbell Scientific.

For most applications, the advanced techniques of static and dynamic VSPECT™ measurements are preferred.

8.1.6 Reading Smart Sensors — Details

Related Topics:
- *Reading Smart Sensors — Overview* (p. 72)
- *Reading Smart Sensors — Details* (p. 344)

8.1.6.1 RS-232 and TTL

Read More *Serial Input / Output Instructions* (p. 556) and *Serial I/O* (p. 238).

The CR800 can receive and record most TTL (0 to 5 Vdc) and true RS-232 data from devices such as smart sensors. See the table *CR800 Terminal Definitions* (p. 76) for those terminals and serial ports configurable for either TTL or true RS-232 communications. Use of the **CS I/O** port for true RS-232 communications requires use of an interface device. See the appendix *CS I/O Serial Interfaces* (p. 628). If additional serial inputs are required, serial input expansion modules can be connected. See the appendix *Serial I/O Modules List* (p. 622). Serial data are usually captured as text strings, which are then parsed (split up) as defined in the CRBasic program.

Note **C** terminals configured as Tx transmit only 0 to 5 Vdc logic. However, **C** terminals configured as Rx read most true RS-232 signals. When connecting serial sensors to a **C** terminal configured as Rx, the sensor power consumption may increase by a few milliamps due to voltage clamps in the CR800. An external resistor may need to be added in series to the Rx line to limit the current drain, although this is not advisable at very high baud rates. Figure *Circuit to Limit C Terminal RS-232 Input to 5 Volts* (p. 344) shows a circuit that limits voltage to 5 Vdc.

Figure 92. Circuit to Limit C Terminal Input to 5 Vdc

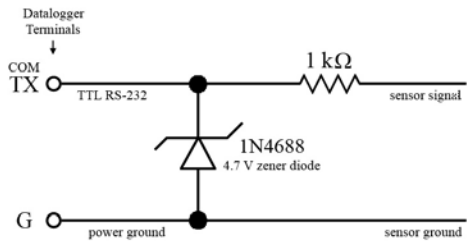

8.1.6.2 SDI-12 Sensor Support — Details

Related Topics:
- *SDI-12 Sensor Support — Overview* (p. 72)
- *SDI-12 Sensor Support — Details* (p. 344)
- *Serial I/O: SDI-12 Sensor Support — Programming Resource* (p. 259)
- *SDI-12 Sensor Support — Instructions* (p. 529)

SDI-12 is a communication protocol developed to transmit digital data from smart sensors to data-acquisition units. It is a simple protocol, requiring only a single

communication wire. Typically, the data-acquisition unit also supplies power (12 Vdc and ground) to the SDI-12 sensor. **SDI12Recorder()** instruction communicates with SDI-12 sensors on terminals configured for SDI-12 input. See the table *CR800 Terminal Definitions* (p. 76) to determine those terminals configurable for SDI-12 communications.

8.1.7 Field Calibration — Overview

Related Topics:
- *Field Calibration — Overview* (p. 73)
- *Field Calibration — Details* (p. 203)

Calibration increases accuracy of a measurement device by adjusting its output, or the measurement of its output, to match independently verified quantities. Adjusting sensor output directly is preferred, but not always possible or practical. By adding **FieldCal()** or **FieldCalStrain()** instructions to the CR800 CRBasic program, measurements of a linear sensor can be adjusted by modifying the programmed multiplier and offset applied to the measurement.

8.1.8 Cabling Effects

Related Topics:
- *Cabling Effects — Overview* (p. 73)
- *Cabling Effects — Details* (p. 345)

Sensor cabling can have significant effects on sensor response and accuracy. This is usually only a concern with sensors acquired from manufacturers other than Campbell Scientific. Campbell Scientific sensors are engineered for optimal performance with factory-installed cables.

8.1.8.1 Analog-Sensor Cables

Cable length in analog sensors is most likely to affect the signal settling time. For more information, see the section *Signal Settling Time* (p. 309).

8.1.8.2 Pulse Sensors

Because of the long interval between switch closures in tipping-bucket rain gages, appreciable capacitance can build up between wires in long cables. A built-up charge can cause arcing when the switch closes and so shorten switch life. As shown in figure *Current Limiting Resistor in a Rain Gage Circuit* (p. 346), a 100 Ω resistor is connected in series at the switch to prevent arcing. This resistor is installed on all rain gages currently sold by Campbell Scientific.

Figure 93. Current-Limiting Resistor in a Rain Gage Circuit

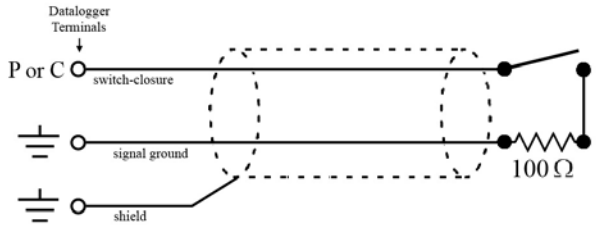

8.1.8.3 RS-232 Sensors

RS-232 sensor cable lengths should be limited to 50 feet.

8.1.8.4 SDI-12 Sensors

The SDI-12 standard allows cable lengths of up to 200 feet. Campbell Scientific does not recommend SDI-12 sensor lead lengths greater than 200 feet; however, longer lead lengths can sometimes be accommodated by increasing the wire gage or powering the sensor with a second 12 Vdc power supply placed near the sensor.

8.1.9 Synchronizing Measurements

Related Topics:
- *Synchronizing Measurements — Overview* (p. 74)
- *Synchronizing Measurements — Details* (p. 346)

Timing of a measurement is usually controlled relative to the CR800 clock. When sensors in a sensor network are measured by a single CR800, measurement times are synchronized, often within a few milliseconds, depending on sensor number and measurement type. Large numbers of sensors, cable length restrictions, or long distances between measurement sites may require use of multiple CR800s. Techniques outlined below enable network administrators to synchronize CR800 clocks and measurements in a CR800 network.

Care should be taken when a clock-change operation is planned. Any time the CR800 clock is changed, the deviation of the new time from the old time may be sufficient to cause a skipped record in data tables. Any command used to synchronize clocks should be executed after any **CallTable()** instructions and timed so as to execute well clear of data-output intervals.

Techniques to synchronize measurements across a network include:

1. *LoggerNet* (p. 93) – when reliable telecommunications are common to all CR800s in a network, the *LoggerNet* automated clock check provides a simple time synchronization function. Accuracy is limited by the system clock on the PC running the *LoggerNet* server. Precision is limited by network transmission latencies. *LoggerNet* compensates for latencies in many telecommunication systems and can achieve synchronies of <100 ms deviation. Errors of 2 to 3 second may be seen on very busy RF connections or long distance internet

connections.

Note Common PC clocks are notoriously inaccurate. Information available at **http://www.nist.gov/pml/div688/grp40/its.cfm** gives some good pointers on keeping PC clocks accurate.

2. Digital trigger — a digital trigger, rather than a clock, can provide the synchronization signal. When cabling can be run from CR800 to CR800, each CR800 can catch the rising edge of a digital pulse from the master CR800 and synchronize measurements or other functions, using the **WaitDigTrig()** instructions, independent of CR800 clocks or data time stamps. When programs are running in pipeline mode, measurements can be synchronized to within a few microseconds (see *WaitDigTrig Scans* (p. 155)).

3. *PakBus* (p. 88) commands — the CR800 is a PakBus device, so it is capable of being a node in a PakBus network. Node clocks in a PakBus network are synchronized using the **SendGetVariable()**, **ClockReport()**, or **PakBusClock()** commands. The CR800 clock has a resolution of 10 ms, which is the resolution used by PakBus clock-sync functions. In networks without routers, repeaters, or retries, the communication time will cause an additional error (typically a few 10s of milliseconds). PakBus clock commands set the time at the end of a scan to minimize the chance of skipping a record to a data table. This is not the same clock check process used by *LoggerNet* as it does not use average round trip calculations to try to account for network connection latency.

4. Radios — A PakBus enabled radio network has an advantage over Ethernet in that **ClockReport()** can be broadcast to all dataloggers in the network simultaneously. Each will set its clock with a single PakBus broadcast from the master. Each datalogger in the network must be programmed with a **PakBusClock()** instruction.

Note Use of PakBus clock functions re-synchronizes the **Scan()** instruction. Use should not exceed once per minute. CR800 clocks drift at a slow enough rate that a **ClockReport()** once per minute should be sufficient to keep clocks within 30 ms of each other.

With any synchronization method, care should be taken as to when and how things are executed. Nudging the clock can cause skipped scans or skipped records if the change is made at the wrong time or changed by too much.

5. GPS — clocks in CR800s can be synchronized to within about 10 ms of each other using the **GPS()** instruction. CR800s built since October of 2008 (serial numbers ≥ [7920]) can be synchronized within a few microseconds of each other and within ≈200 µs of UTC. While a GPS signal is available, the CR800 essentially uses the GPS as its continuous clock source, so the chances of jumps in system time and skipped records are minimized.

6. Ethernet — any CR800 with a network connection (internet, GPRS, private network) can synchronize its clock relative to Coordinated Universal Time (UTC) using the **NetworkTimeProtocol()** instruction. Precisions are usually maintained to within 10 ms. The NTP server could be another logger or any NTP server (such as an email server or nist.gov). Try to use a local server — something where communication latency is low, or, at least, consistent. Also, try not to execute the **NetworkTimeProtocol()** at the top of a scan; try to ask for the server time between even seconds.

8.2 Measurement and Control Peripherals — Details

Related Topics:
- *Measurement and Control Peripherals — Overview* (p. 84)
- *Measurement and Control Peripherals — Details* (p. 348)
- *Measurement and Control Peripherals — Lists* (p. 622)

Peripheral devices expand the CR800 input and output capacities. Some peripherals are designed as SDM (synchronous devices for measurement) or CDM (CPI devices for measurement). SDM and CDM devices are intelligent peripherals that receive instruction from, and send data to, the CR800 using proprietary communication protocols through SDM terminals and CPI interfaces. The following sections discuss peripherals according to measurement types.

8.2.1 Analog-Input Modules

Read More For more information see appendix *Analog-Input Modules List* (p. 622).

Mechanical and solid-state multiplexers are available to expand the number of analog sensor inputs. Multiplexers are designed for single-ended, differential, bridge-resistance, or thermocouple inputs.

8.2.2 Pulse-Input Modules

Read More For more information see appendix *Pulse-Input Modules List* (p. 622).

Pulse-input expansion modules are available for switch-closure, state, pulse-count and frequency measurements, and interval timing.

8.2.2.1 Low-Level Ac Input Modules — Overview

Related Topics:
- *Low-Level Ac Input Modules — Overview* (p. 348)
- *Low-Level Ac Measurements — Details* (p. 334)
- *Pulse Input Modules — Lists* (p. 622)

Low-level ac input modules increase the number of low-level ac signals a CR800 can monitor by converting low-level ac to high-frequency pulse.

8.2.3 Serial I/O Modules — Details

Read More For more information see appendix *Serial I/O Modules List* (p. 622).

Capturing input from intelligent serial-output devices can be challenging. Several Campbell Scientific serial I/O modules are designed to facilitate reading and parsing serial data. Campbell Scientific recommends consulting with an application engineer when deciding which serial-input module is suited to a particular application.

8.2.4 Terminal-Input Modules

Read More For more information see appendix *Passive Signal Conditioners List* (p. 623).

Terminal Input Modules (TIMs) are devices that provide simple measurement-support circuits in a convenient package. TIMs include voltage dividers for cutting the output voltage of sensors to voltage levels compatible with the CR800, modules for completion of resistive bridges, and shunt modules for measurement of analog-current sensors.

8.2.5 Vibrating-Wire Modules

Read More For complete information see appendix *Vibrating-Wire Modules List* (p. 623).

Vibrating-wire modules interface vibrating-wire transducers to the CR800.

8.2.6 Analog-Output Modules

Read More For more information see appendix *Continuous-Analog-Output (CAO) Modules List* (p. 625).

The CR800 can scale measured or processed values and transfer these values in digital form to an analog output device. The analog output device performs a digital-to-analog conversion to output an analog voltage or current. The output level is maintained until updated by the CR800.

8.2.7 PLC Control Modules — Overview

Related Topics:
- *PLC Control — Overview* (p. 74)
- *PLC Control — Details* (p. 237)
- *PLC Control Modules — Overview* (p. 349)
- *PLC Control Modules — Lists* (p. 624)
- *PLC Control — Instructions* (p. 536)
- Switched Voltage Output — Specifications
- *Switched Voltage Output — Overview* (p. 78)
- *Switched Voltage Output — Details* (p. 101)

Controlling power to an external device is a common function of the CR800. On-board control terminals and peripheral devices are available for binary (on / off) or analog (variable) control. A switched, 12 Vdc terminal (**SW12V**) is also available. See the section *Switched Unregulated (Nominal 12 Volt)* (p. 103).

8.2.7.1 Terminals Configured for Control

C terminals can be configured as output ports so set low (0 Vdc) or high (5 Vdc) using the **PortSet()** or **WriteIO()** instructions. Port **C4** can be configured for pulse width modulation with a maximum period of 36.4 s. A terminal configured for digital I/O is normally used to operate an external relay-driver circuit because the port itself has limited drive capacity. Drive capacity is determined by the 5 Vdc supply and a 330 Ω output resistance. It is expressed as:

$$V_o = 4.9\ V - (330\ \Omega) \cdot I_o$$

Where V_o is the drive limit, and I_o is the current required by the external device. Figure *Control Port Current Sourcing* (p. 350) plots the relationship.

*Figure 94. Current sourcing from **C** terminals configured for control*

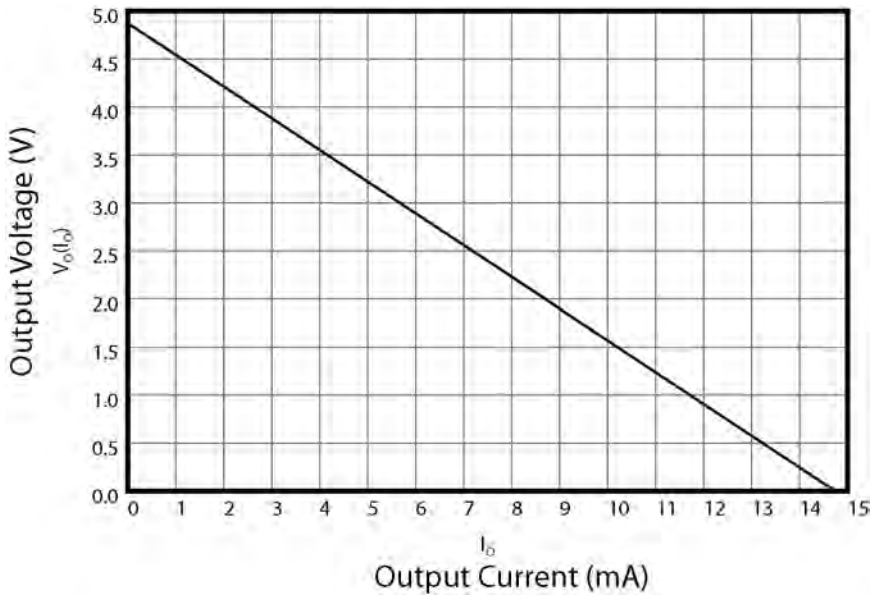

8.2.7.2 Relays and Relay Drivers

Read More For more information see appendix *Relay Drivers Modules List* (p. 625).

Several relay drivers are manufactured by Campbell Scientific. Compatible, inexpensive, and reliable single-channel relay drivers for a wide range of loads are also available from electronic vendors such as *Crydom, Newark, and Mouser* (p. 508).

8.2.7.3 Component-Built Relays

Figure *Relay Driver Circuit with Relay* (p. 351) shows a typical relay driver circuit in conjunction with a coil driven relay, which may be used to switch external power to a device. In this example, when the terminal configured for control is set high, 12 Vdc from the datalogger passes through the relay coil, closing the relay which completes the power circuit and turns on the fan.

In other applications, it may be desirable to simply switch power to a device without going through a relay. Figure *Power Switching without Relay* (p. 351) illustrates this. If the device to be powered draws in excess of 75 mA at room temperature (limit of the 2N2907A medium power transistor), the use of a relay is required.

Figure 95. Relay Driver Circuit with Relay

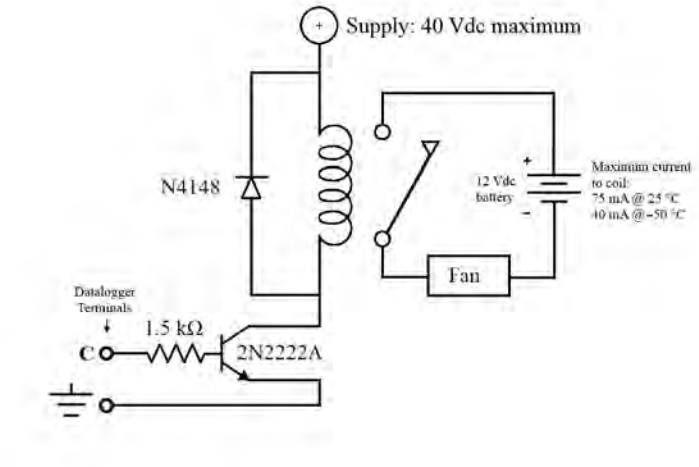

Figure 96. Power Switching without Relay

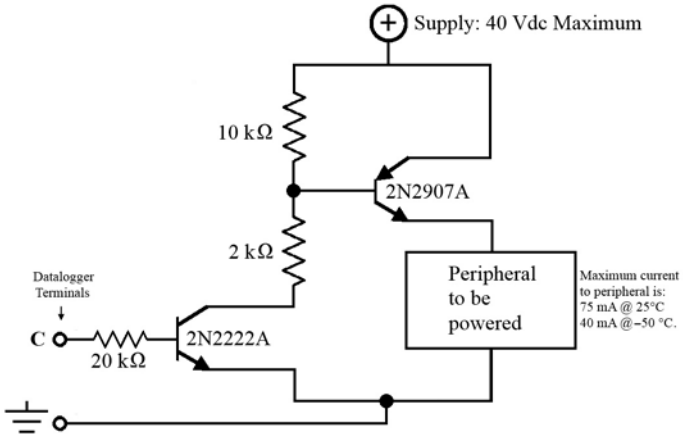

8.3 Memory

Related Topics:
- *Memory — Overview* (p. 86)
- *Memory — Details* (p. 351)
- *Data Storage Devices — List* (p. 629)

8.3.1 Storage Media

CR800 memory consists of four non-volatile storage media:

- Internal battery-backed SRAM
- Internal flash
- Internal serial flash
- External flash (optional flash USB: drive)

Table *CR800 Memory Allocation* (p. 352) and table *CR800 SRAM Memory* (p. 353) illustrate the structure of CR800 memory around these media. The CR800 uses and maintains most memory features automatically. However, users should periodically review areas of memory wherein data files, CRBasic program files, and image files reside. See section *File Management in CR800 Memory* (p. 361) for more information.

By default, final-data memory (memory for stored data) is organized as ring memory. When the ring is full, oldest data are overwritten by newest data. The **DataTable()** instruction, however, has an option to set a data table to ***Fill and Stop***.

Table 79. CR800 Memory Allocation

Memory Sector	Comments
Main Battery-Backed SRAM[1] 4 MB*	• OS variables • CRBASIC compiled program binary structure • CRBASIC variables • Final-data memory • Communication memory • USR: FAT32 RAM drive • 'Keep' memory • Dynamic runtime memory allocation • See table *CR800 SRAM Memory* (p. 353) for detail.
Operating System Flash Memory[2] 2 MB	• Operating system • Serial number • Board revision • Boot code • Erased when loading new OS. Boot code erased only if changed.

Table 79. CR800 Memory Allocation

Internal Serial Flash[3] 512 kB	• Device settings (12 kB) — PakBus address and settings, station name. Rebuilt when a setting changes. • CPU:drive (500 kB) — program files, field calibration files, other files not frequently overwritten. When a program is compiled and run, it is copied here automatically for loading on subsequent power-ups. Files accumulate until deleted with **File Control** or the **FilesManage()** instruction. Use USR: drive to store other file types. Available CPU: memory is reported in **Status** table field **CPUDriveFree**. • FAT32 file system • Limited write cycles (100,000) • Slow serial access
External Flash (Optional) 2 GB: USB: drive	*USB: drive* (p. 629) — Holds program files. Holds a copy of requested final-memory table data as files when **TableFile()** instruction is used. USB: data can be retrieved from the storage device with *Windows Explorer*. USB: drive can facilitate the use of Powerup.ini.

[1] SRAM

·CR800 series changed from 2 to 4 MB SRAM in Sept 2007. SNs ≥ 3605 are 4 MB.

2 Flash is rated for > 1 million overwrites.

[3] Serial flash is rated for 100,000 overwrites (50,000 overwrites on 128 kB units). Care should be taken in programs that overwrite memory to use the CRD: or USR: drives so as not to wear-out the CPU: drive.

·The CR800 series changed from 128 to 512 kB serial flash in May 2007. SNs ≥ 2787 are 512 kB.

Table 80. CR800 Main Memory

Use	*Comments*
Static Memory	Operational memory used by the operating system. Rebuilt at power-up, program re-compile, and watchdog events.
Operating Settings and Properties	*"Keep"* *(p. 492)* memory. Stores settings such as PakBus address, station name, beacon intervals, neighbor lists, etc. Also stores dynamic properties such as the routing table, communication timeouts, etc.
CRBasic Program Operating Memory	Stores the currently compiled and running user program. This sector is rebuilt on power-up, recompile, and watchdog events.
Variables & Constants	Stores variables used by the CRBasic program. These values may persist through power-up, recompile, and watchdog events if the **PreserveVariables** instruction is in the running program.
Final-Data Memory	Stores data. Fills memory remaining after all other demands are satisfied. Configurable as ring or fill-and-stop memory. Compile error occurs if insufficient memory is available for user-allocated data tables. Given lowest priority in SRAM memory allocation.
Communication Memory 1	Construction and temporary storage of PakBus packets.
Communication Memory 2	Constructed Routing Table: list of known nodes and routes to nodes. Routers use more space than leaf nodes because routes to neighbors must be remembered. Increasing the PakBusNodes field in the **Status** table will increase this allocation.
USR: drive <= 3.6 MB (4 MB Mem) <= 1.5 MB (2 MB Mem) Less on older units with more limited memory.	Optionally allocated. Holds image files. Holds a copy of final-data memory when **TableFile()** instruction used. Provides memory for **FileRead()** and **FileWrite()** operations. Managed in File Control. Status reported in **Status** table fields "USRDriveSize" and "USRDriveFree."

Table 81. Memory Drives

Drive	Recommended File Types
CPU:[1]	cr8, .CAL
USR:[2]	cr8, .CAL
USB:	.DAT

[1]The CPU: drive uses a FAT16 file system, so it is limited to 128 file. If the file names are longer than 8.3 characters (e.g. 12345678.123), you can store less.
[2]The USR: drive uses a FAT32 file system, so there is no limit, beyond practicality and available memory, to the number of files that can be stored. While a FAT file system is subject to fragmentation, performance degradation is not likely to be noticed since the drive has very fast access because it has a relatively small amount of solid state RAM.
[3]The CRD: drive is a CompactFlash card attached to the CR800 by use of a *CF card storage module* (p. 629). Cards should be formatted as FAT32 for optimal performance. The card format feature in the CR800 will format the card with the same format previously used on the card.

8.3.1.1 Memory Drives — On-Board

Data-storage drives are listed in table *CR800 Memory Drives* (p. 354). Data-table SRAM and the CPU: drive are automatically partitioned for use in the CR800. The USR: drive can be partitioned as needed. The USB: drive is automatically partitioned when a Campbell Scientific *mass-storage device* (p. 629) is connected.

8.3.1.1.1 Data Table SRAM

Primary storage for measurement data are those areas in SRAM allocated to data tables as detailed in table *CR800 SRAM Memory* (p. 353). Measurement data can be also be stored as discrete files on USR: or USB: by using **TableFile()** instruction.

The CR800 can be programmed to store each measurement or, more commonly, to store processed values such as averages, maxima, minima, histograms, FFTs, etc. Data are stored periodically or conditionally in data tables in SRAM as directed by the CRBasic program (see *Structure* (p. 121)). The **DataTable()** instruction allows the size of a data table to be programmed. Discrete data files are normally created only on a PC when data are retrieved using *datalogger support software* (p. 93).

Data are usually erased from this area when a program is sent to the CR800. However, when using support software **File Control** menu **Send** (p. 488) command or *CRBasic Editor* **Compile, Save and Send** (p. 485) command, options are available to preserve data when downloading programs.

8.3.1.1.2 CPU: Drive

CPU: is the default drive on which programs and calibration files are stored. It is formatted as FAT16, so it has a limit of 128 files. Do not store data on CPU: or premature failure of memory will likely result.

8.3.1.1.3 USR: Drive

SRAM can be partitioned to create a FAT32 USR: drive, analogous to partitioning a second drive on a PC hard disk. Certain types of files are stored to USR: to

reserve limited CPU: memory for datalogger programs and calibration files. Partitioning also helps prevent interference from data table SRAM. USR: is configured using *DevConfig* settings or **SetStatus()** instruction in a CRBasic program. Partition USR: drive to at least 11264 bytes in 512-byte increments. If the value entered is not a multiple of 512 bytes, the size is rounded up. Maximum size of USR: is the total RAM size less 400 kB; i.e., for a CR800 with 4 MB memory, the maximum size of USR: is about 2.99 MB.

USR: is not affected by program recompilation or formatting of other drives. It will only be reset if the USR: drive is formatted, a new operating system is loaded, or the size of USR: is changed. USR: size is changed manually by accessing it in the **Status** table or by loading a CRBasic program with a different USR: drive size entered in a **SetStatus()** or **SetSetting()** instruction. See section *Configuration with CRBasic Program* (p. 113).

Measurement data can be stored on USR: as discrete files by using the **TableFile()** instruction. Table *TableFile()-Instruction Data-File Formats* (p. 357) describes available data-file formats.

Note Placing an optional USR: size setting in the CRBasic program over-rides manual changes to USR: size. When USR: size is changed manually, the CRBasic program restarts and the programmed size for USR: takes immediate effect.

The USR: drive holds any file type within the constraints of the size of the drive and the limitations on filenames. Files typically stored include image files from cameras (see the appendix Cameras), certain configuration files, files written for FTP retrieval, HTML files for viewing with web access, and files created with the **TableFile()** instruction. Files on USR: can be collected using *datalogger support software* (p. 93) **Retrieve** (p. 488) command, or automatically using the datalogger support software **Setup File Retrieval** tab functions.

Monitor use of available USR: memory to ensure adequate space to store new files. **FileManage()** command can be used in the CRBasic program to remove files. Files also can be removed using datalogger support software **Delete** (p. 488) command.

Two **Status** table registers monitor use and size of the USR: drive. Bytes remaining are indicated in register **USRDriveFree**. Total size is indicated in register **USRDriveSize**. Memory allocated to USR: drive, less overhead for directory use, is shown in datalogger support software **File Control** (p. 488) window.

8.3.1.1.4 USB: Drive

USB: drive uses *Flash* (p. 489) memory on a Campbell Scientific mass storage device (see the appendix *Mass Storage Devices* (p. 629)). Its primary purpose is the storage of ASCII data files. Measurement data can be stored on USB: as discrete files by using the **TableFile()** instruction. Table *TableFile()-Instruction Data-File Formats* (p. 357)*Term. Flash* (p. 489)*d*escribes available data-file formats.

Caution When removing mass-storage devices, do so when the LED is not flashing or lit.

Consider the following when using Campbell Scientific mass-storage devices:

- format as FAT32
- connect to the CR800 **CS I/O** port
- remove only when inactive or data corruption may result

8.3.2 Data-File Formats

Data-file format options are available with the **TableFile()** instruction. Time-series data have an option to include header, time stamp and record number. See the table *TableFile() Instruction Data-File Formats* (p. 357). For a format to be compatible with *datalogger support software* (p. 93) graphing and reporting tools, header, time stamps, and record numbers are usually required. Fully compatible formats are indicated with an asterisk. A more detailed discussion of data-file formats is available in the Campbell Scientific publication *LoggerNet Instruction Manual*, which is available at *www.campbellsci.com*.

Table 82. TableFile() Instruction Data-File Formats

TableFile() **Format Option**	**Base File Format**	**Elements Included**		
		Header Information	**Time Stamp**	**Record Number**
0[1]	TOB1	✓	✓	✓
1	TOB1	✓	✓	
2	TOB1	✓		✓
3	TOB1	✓		
4	TOB1		✓	✓
5	TOB1		✓	
6	TOB1			✓
7	TOB1			
8[1]	TOA5	✓	✓	✓
9	TOA5	✓	✓	
10	TOA5	✓		✓
11	TOA5	✓		
12	TOA5		✓	✓
13	TOA5		✓	
14	TOA5			✓
15	TOA5			
16[1]	CSIXML	✓	✓	✓
17	CSIXML	✓	✓	
18	CSIXML	✓		✓
19	CSIXML	✓		
32[1]	CSIJSON	✓	✓	✓

Table 82. TableFile() Instruction Data-File Formats

TableFile() **Format Option**	**Base File Format**	**Elements Included**		
		Header Information	**Time Stamp**	**Record Number**
33	CSIJSON	✓	✓	
34	CSIJSON	✓		✓
35	CSIJSON	✓		
64[2]	TOB3			

[1]Formats compatible with *datalogger support software* (p. 93) data-viewing and graphing utilities
[2]See Writing High-Frequency Data to Memory Cards for more information on using option ***64***.

Data-File Format Examples

TOB1

TOB1 files may contain an ASCII header and binary data. The last line in the example contains cryptic text which represents binary data.

Example:

```
"TOB1","11467","CR1000","11467","CR1000.Std.20","CPU:file format.CR1","61449","Test"
"SECONDS","NANOSECONDS","RECORD","battfivoltfiMin","PTemp"
"SECONDS","NANOSECONDS","RN","",""
"","","","Min","Smp"
"ULONG","ULONG","ULONG","FP2","FP2"
}Ÿp'    E1HŒŸp'    E1H›Ÿp'    E1HªŸp'    E1H¹Ÿp'       E1H
```

TOA5

TOA5 files contain *ASCII* (p. 481) header and comma-separated data.

Example:

```
"TOA5","11467","CR1000","11467","CR1000.Std.20","CPU:file format.CR1","26243","Test"
"TIMESTAMP","RECORD","battfivoltfiMin","PTemp"
"TS","RN","",""
"","","Min","Smp"
"2010-12-20 11:31:30",7,13.29,20.77
"2010-12-20 11:31:45",8,13.26,20.77
"2010-12-20 11:32:00",9,13.29,20.8
```

CSIXML

CSIXML files contain header information and data in an *XML* (p. 507) format.

Example:

```
<?xml version="1.0" standalone="yes"?>
<csixml version="1.0">
<head>
  <environment>
    <station-name>11467</station-name>
    <table-name>Test</table-name>
    <model>CR1000</model>
    <serial-no>11467</serial-no>
    <os-version>CR1000.Std.20</os-version>
    <dld-name>CPU:file format.CR1</dld-name>
  </environment>
  <fields>
    <field name="battfivoltfiMin" type="xsd:float" process="Min"/>
    <field name="PTemp" type="xsd:float" process="Smp"/>
  </fields>
</head>
  <data>
    <r time="2010-12-20T11:37:45" no="10"><v1>13.29</v1><v2>21.04</v2></r>
    <r time="2010-12-20T11:38:00" no="11"><v1>13.29</v1><v2>21.04</v2></r>
    <r time="2010-12-20T11:38:15" no="12"><v1>13.29</v1><v2>21.04</v2></r>
  </data>
</csixml>
```

CSIJSON

CSIJSON files contain header information and data in a *JSON* (p. 492) format.

Example:

```
"signature": 38611,"environment":  {"stationfiname":  "11467","tablefiname":
"Test","model":  "CR1000","serialfino":  "11467",
"osfiversion":  "CR1000.Std.21.03","progfiname":  "CPU:file format.CR1"},"fields":
[{"name":  "battfivoltfiMin","type":  "xsd:float",
"process":  "Min"},{"name":  "PTemp","type":  "xsd:float","process":  "Smp"}]},
"data": [{"time":  "2011-01-06T15:04:15","no":  0,"vals": [13.28,21.29]},
{"time":  "2011-01-06T15:04:30","no":  1,"vals": [13.28,21.29]},
{"time":  "2011-01-06T15:04:45","no":  2,"vals": [13.28,21.29]},
{"time":  "2011-01-06T15:05:00","no":  3,"vals": [13.28,21.29]}]}
```

Data File-Format Elements

Header

File headers provide metadata that describe the data in the file. A TOA5 header contains the metadata described below. Other data formats contain similar information unless a non-header format option is selected in the **TableFile()** instruction in the CR800 CRBasic program.

Line 1 – Data Origins

Includes the following metadata series: file type, station name, CR800 model name, CR800 serial number, OS version, CRBasic program name, program signature, data-table name.

Line 2 – Data-Field Names

Lists the name of individual data fields. If the field is an element of an array, the name will be followed by a comma-separated list of subscripts within

parentheses that identifies the array index. For example, a variable named "values" that is declared as a two-by-two array, i.e.,

```
Public Values(2,2)
```

will be represented by four field names: "values(1,1)", "values(1,2)", "values(2,1)", and "values(2,2)". Scalar (non-array) variables will not have subscripts.

Line 3 – Data Units

Includes the units associated with each field in the record. If no units are programmed in the CR800 CRBasic program, an empty string is entered for that field.

Line 4 – Data-Processing Descriptors

Entries describe what type of processing was performed in the CR800 to produce corresponding data, e.g., Smp indicates samples, Min indicates minima. If there is no recognized processing for a field, it is assigned an empty string. There will be one descriptor for each field name given on Header Line 2.

Record Element 1 – Timestamp

Data without timestamps are usually meaningless. Nevertheless, the **TableFile()** instruction optionally includes timestamps in some formats.

Record Element 2 – Record Number

Record numbers are optionally provided in some formats as a means to ensure data integrity and provide an up-count data field for graphing operations. The maximum record number is &hffffffff (a 32-bit number), then the record number sequence restarts at zero. The CR800 reports back to the datalogger support software 31 bits, or a maximum of &h7fffffff, then it restarts at 0. For example, if the record number increments once a second, restart at zero will occur about once every 68 years (yes, years).

8.3.3 Resetting the CR800

A reset is referred to as a "memory reset." Be sure to backup the current CR800 configuration before a reset in case you need to revert to the old settings.

The following features are available for complete or selective reset of CR800 memory:

- Full memory reset
- Program send reset
- Manual data-table reset
- Formatting memory drives

8.3.3.1 Full Memory Reset

Full memory reset occurs when an operating system is sent to the CR800 using *DevConfig* or when entering **98765** in the **Status** table field **FullMemReset**. A full memory reset does the following:

- Clears and formats CPU: drive (all program files erased)
- Clears SRAM data tables

- Clears **Status**-table elements
- Restores settings to default
- Initializes system variables
- Clears communication memory
- Recompiles current program

Operating systems can also be sent using the program **Send** feature in *datalogger support software* (p. 93). A full reset does not occur in this case. Beginning with CR800 operating system v.16, settings and registers in the **Status** table are preserved when sending a subsequent operating system by this method; data tables are erased. Rely on this feature only with an abundance of caution when sending an OS to CR800s in remote, expensive to get to, or difficult-to-access locations.

8.3.3.2 Program Send Reset

Final-memory (p. 489) data are erased when user programs are uploaded, unless preserve / erase data options are used. Preserve / erase data options are presented when sending programs using **File Control Send** (p. 488) command and *CRBasic Editor* **Compile, Save and Send** (p. 485). See *Preserving Data at Program Send* (p. 125) for a more-detailed discussion of preserve / erase data at program send.

8.3.3.3 Manual Data-Table Reset

Data-table memory is selectively reset from

- Support software **Station Status** (p. 503) command
- CR1000KD Keyboard Display: Data | Reset Data Tables

8.3.3.4 Formatting Drives

CPU:, USR:, andUSB: drives can be formatted individually. Formatting a drive erases all files on that drive. If the currently running user program is found on the drive to be formatted, the program will cease running and any SRAM data associated with the program are erased. Drive formatting is performed through *datalogger support software* (p. 631) *Format* (p. 488) command.

8.3.4 File Management

As summarized in table *File Control Functions* (p. 361), files in CR800 memory (program, data, CAL, image) can be managed or controlled with *datalogger support software* (p. 93), CR800 *Web API* (p. 402), or *CoraScript* (p. 484). Use of *CoraScript* is described in the *LoggerNet* software manual, which is available at *www.campbellsci.com*. More information on file attributes that enhance datalogger security, see the *Security* (p. 90) section.

Table 83. File-Control Functions

File-Control Functions	*Accessed Through*
Sending programs to the CR800	**Program Send**[1], **File Control Send**[2], *DevConfig*[3], keyboard or powerup.ini with a Campbell Scientific mass storage device[4,5], *web API* *(p. 402)* **HTTPPut** (Sending a File to a Datalogger)
Setting program file attributes. See File Attributes (p. 363)	**File Control**[2];power-up with Campbell Scientific mass storage device[5], **FileManage()** instruction[6], web API **FileControl**
Sending an OS to the CR800. Reset CR800 settings.	*DevConfig*[3] **Send OS** tab; *DevConfig*[3] **File Control** tab; Campbell Scientific mass storage device[5]
Sending an OS to the CR800. Preserve CR800 settings.	**Send**[1]; *DevConfig*[3] **File Control** tab; power-up with Campbell Scientific mass storage device with default.cr8 file[5], web API **HTTPPut** (Sending a File to a Datalogger)
Formatting CR800 memory drives	**File Control**[2], power-up with Campbell Scientific mass storage device[5], web API **FileControl**
Retrieving programs from the CR800	**Retrieve**[7], **File Control**[2], keyboard with Campbell Scientific mass storage device[4], web API **NewestFile**
Prescribes the disposition (preserve or delete) of old data files on Campbell Scientific mass storage device	**File Control**[2], power-up with Campbell Scientific mass storage device[5], *web API* *(p. 402)* **FileControl**
Deleting files from memory drives	**File Control**[2], power-up with Campbell Scientific mass storage device[5], web API **FileControl**
Stopping program execution	**File Control**[2], web API **FileControl**
Renaming a file	**FileRename()**[6]
Time-stamping a file	**FileTime()**[6]
List files	**File Control**[2], **FileList()**[6], web API **ListFiles**
Create a data file from a data table	**TableFile()**[6]
JPEG files manager	CR1000KD Keyboard Display , *LoggerNet* | *PakBusGraph*, web API **NewestFile**
Hiding files	Web API **FileControl**
Encrypting files	Web API **FileControl**
Abort program on power-up	Hold DEL down on datalogger keypad

[1] *Datalogger support software* *(p. 93)* **Program Send** *(p. 498)* command
[2] Datalogger support software **File Control** *(p. 488)* **utility**
[3] *Device Configuration Utility (DevConfig)* *(p. 109)* software
[4] Manual with Campbell Scientific mass storage device. See *Data Storage* *(p. 355)*
[5] Automatic with Campbell Scientific mass storage device and Powerup.ini. See *Power-up* *(p. 365)*
[6] CRBasic instructions (commands). See *Data-Table Declarations* *(p. 514)* and *File Management* *(p. 361)* and *CRBasic Editor Help*
[7] Datalogger support software **Retrieve** *(p. 488)* command

8.3.4.1 File Attributes

A feature of program files is the file attribute. Table *CR800 File Attributes* (p. 363) lists available file attributes, their functions, and when attributes are typically used. For example, a program file sent with the support software **Program Send** (p. 498) command, runs a) immediately ("run now"), and b) when power is cycled on the CR800 ("run on power-up'). This functionality is invoked because **Program Send** (p. 498) sets two CR800 file attributes on the program file, i.e., **Run Now** and **Run on Power-up**. When together, **Run Now** and **Run on Power-up** are tagged as **Run Always**.

Note Activation of the run-on-power-up file can be prevented by holding down the **Del** key on the CR1000KD Keyboard Display while the CR800 is powering up.

Table 84. CR800 File Attributes

Attribute	*Function*	*Attribute for Programs Sent to CR800 with:*
Run Always (run on power-up + run now)	Runs now and on power-up.	a) **Send** (p. 488) [1] b) **File Control**[2] with **Run Now** & Run on Power-up selected. c) Campbell Scientific mass storage device power-up[3] using commands 1 & 13 (see table *Powerup.ini Commands* (p. 366)).
Run on Power-up	Runs only on power-up	a) **File Control**[2] with **Run on Power-up** checked. b) Campbell Scientific mass storage device power-up[3] using command 2 (see table *Powerup.ini Commands* (p. 366)).
Run Now	Runs only when file sent to CR800	a) **File Control**[2] with **Run Now** checked. b) Campbell Scientific mass storage device power-up[3] using commands 6 & 14 (see the table *Powerup.ini Commands* (p. 366)). However, if the external storage device remains connected, the program loads again from the external storage device.

[1]Support software program **Send** (p. 488) command. See software Help.
[2]Support software *File Control* (p. 488). See software Help & *Preserving Data at Program Send* (p. 125).
[3]Automatic on power-up of CR800 with Campbell Scientific mass storage device and Powerup.ini. See *Power-up* (p. 365).

8.3.4.2 Files Manager

```
FilesManager := { "(" pakbus-address "," name-prefix "," number-
files ")" }.
pakbus-address := number. ; 0 < number < 4095
name-prefix := string.
number_files := number. ; 0 <= number < 10000000
```

This setting specifies the numbers of files of a designated type that are saved when received from a specified node. There can be up to four such settings. The files are renamed by using the specified file name optionally altered by a serial number inserted before the file type. This serial number is used by the datalogger

to know which file to delete after the serial number exceeds the specified number of files to retain. If the number of files is 0, the serial number is not inserted. A special node PakBus address of 3210 can be used if the files are sent with FTP protocol, or 3211 if the files are written with CRBasic.

Note This setting will operate only on a file whose name is not a null string.

Example:

```
(129,CPU:NorthWest.JPG,2)
(130,CRD:SouthEast.JPG,20)
(130,CPU:Message.TXT,0)
```

In the example above, *.JPG files from node 129 are named CPU:NorthWestnnn.JPG and two files are retained . The **nnn** serial number starts at **1** and will advance beyond nine digits. In this example, all *.TXT files from node 130 are stored with the name CPU:Message.Txt, with no serial number inserted.

A second instance of a setting can be configured using the same node PakBus address and same file type, in which case two files will be written according to each of the two settings. For example,

```
(55,USR:photo.JPG,100)
(55:USR:NewestPhoto.JPG,0)
```

will store two files each time a JPG file is received from node 55. They will be named USR:photonnn.JPG and USR:NewestPhoto.JPG. This feature is used when a number of files are to be retained, but a copy of one file whose name never changes is also needed. The second instance of the file can also be serialized and used when a number of files are to be saved to different drives.

Entering 3212 as the PakBus address activates storing IP trace information to a file. The "number of files" parameter specifies the size of the file. The file is a ring file, so the newest tracing is kept. The boundary between newest and oldest is found by looking at the time stamps of the tracing. Logged information may be out of sequence.

Example:

```
(3212, USR:IPTrace.txt, 5000)
```

This syntax will create a file on the USR: drive called IPTrace.txt that will grow to approximately 5 KB in size, and then new data will begin overwriting old data.

8.3.4.3 Data Preservation

Associated with file attributes is the option to preserve data in CR800 memory when a program is sent. This option applies to data table SRAM and *datalogger support software* *(p. 485)* *cache data* *(p. 485)*. Depending on the application, retention of data files when a program is downloaded may be desirable. When sending a program to the CR800 with datalogger support software **Send** command, data are always deleted before the program runs. When the program is sent using support software **File Control Send** *(p. 488)* command or *CRBasic Editor* **Compile, Save and Send** *(p. 485)* command, options to preserve (not erase) or not preserve (erase) data are presented. The logic in the table *Data-Preserve Options* *(p. 365)* summarizes the disposition of CR800 data depending on the data preservation

option selected.

Table 85. Data-Preserve Options

```
if "Preserve data if no table changed"

    if current program = overwritten program
      keep CPU data
      keep cache data
    else
      erase CPU data
      erase cache data
    end if
end if

if "erase data"


    erase CPU data
    erase cache data
end if
```

8.3.4.4 Powerup.ini File — Details

Uploading a CR800 *OS* (p. 495) file or user-program file in the field can be challenging, particularly during weather extremes. Heat, cold, snow, rain, altitude, blowing sand, and distance to hike influence how easily programming with a laptop or palm PC may be. An alternative is to carry the file to the field on a light-weight, external-memory device such as a *USB:* (p. 629) drive. Steps to download the new OS or CRBasic program from an external-memory drive are:

1. Place a text file named **powerup.ini**, with appropriate commands entered in the file, on the external-memory device along with the new OS or CRBasic program file.
2. Connect the external device to the CR800 and then cycle power to the datalogger.

This simple process results in the file uploading to the CR800 with optional run attributes, such as **Run Now**, **Run on Power Up**, or **Run Always** set for individual files. Simply copying a file to a specified drive with no run attributes, or to format a memory drive, is also possible. Command options for **powerup.ini** options also allow final-data memory management on CF cards comparable to the *datalogger support software* (p. 93) **File Control** feature.

Options for **powerup.ini** also allow final-data memory management comparable **File Control** (p. 488).

Caution Test the **powerup.ini** file and procedures in the lab before going to the field. Always carry a laptop or mobile device (with datalogger support software) into difficult- or expensive-to-access places as backup.

Powerup.ini commands include the following functions:

- Sending programs to the CR800.
- Optionally setting run attributes of CR800 program files.
- Sending an OS to the CR800.

- Formatting memory drives.
- Deleting data files associated with the previously running program.

When power is connected to the CR800, it searches for **powerup.ini** and executes the command(s) prior to compiling a program. **Powerup.ini** performs three operations:

1. Copies the program file to a memory drive
2. Optionally sets a file run attribute (**Run Now**, **Run on Power Up**, or **Run Always**) for the program file.
3. Optionally deletes data files stored from the overwritten (just previous) program.
4. Formats a specified drive.

Execution of **powerup.ini** takes precedence during CR800 power-up. Although **powerup.ini** sets file attributes for the uploaded programs, its presence on a drive does not allow those file attributes to control the power-up process. To avoid confusion, either remove the external drive on which **powerup.ini** resides or delete the file after the power-up operation is complete.

8.3.4.4.1 Creating and Editing Powerup.ini

Powerup.ini is created with a text editor on a PC, then saved on a memory drive of the CR800. The file is saved to the memory drive, along with the operating system or user program file, using the *datalogger support software* *(p. 631)* **File Control | Send** *(p. 488)* command.

Note Some text editors (such as MicroSoft® WordPad®) will attach header information to the powerup.ini file causing it to abort. Check the text of a powerup.ini file in the CR800 with the CR1000KD Keyboard Display to see what the CR800 actually sees.

Comments can be added to the file by preceding them with a single-quote character ('). All text after the comment mark on the same line is ignored.

Syntax

Syntax for **powerup.ini** is:

```
Command,File,Device
```

where,

- ***Command*** is one of the numeric commands in table *Powerup.ini Commands* *(p. 366)*.
- ***File*** is the accompanying operating system or user program file. File name can be up to 22 characters long.
- ***Device*** is the CR800 memory drive to which the accompanying operating system or user program file is copied (usually CPU:). If left blank or with an invalid option, default device will be CPU:. Use the same drive designation as the transporting external device if the preference is to not copy the file.

Table 86. Powerup.ini Commands and Applications

Command	*Description*	*Applications*
1[1]	Run always, preserve data	Copies the specified program to the designated drive and sets the run attribute of the program to **Run Always.**
2	Run on power-up	Copies the specified program to the designated drive. The program specified in command **2** will be set to **Run Always** unless command **6** or **14** is used to set a separate **Run Now** program.
5	Format	Formats the designated drive.
6[1]	Run now, preserve data	Copies the specified program to the designated drive and sets the run attribute of the program to **Run Now**.
7	Copy file to specified drive with no run attributes. Use to copy *Include* *(p. 491)* or program support files to the CPU: drive before copying the program file to run.	Copies the specified file to the designated drive with no run attributes.
9	Load OS (File = .obj)	
13	Run always, erase data	Copies the specified program to the designated drive and sets the run attribute of the program to **Run Always**.
14	Run now, erase files	Copies the specified program to the designated drive and sets the run attribute to **Run Now**.

[1]By using **PreserveVariables()** instruction in the CRBasic program, with commands ***1*** and ***6***, data and variables can be preserved.

Example Power-up.ini Files

Table 87. Powerup.ini Example. Code Format and Syntax

```
'Code format and syntax

'Command = numeric power-up command
'File = file associated with the action
'Device = device to which File is copied. Defaults to CPU:

'Command,File,Device
13,Write2CRD_2.cr1,cpu:
```

Table 88. Powerup.ini Example. Run Program on Power-up

```
'Copy program file pwrup.cr1 from the external drive to CPU:
'File will run only when CR800 powered-up later.
2,pwrup.cr1,cpu:
```

Table 89. Powerup.ini Example. Format the USR: Drive

```
'Format the USR: drive
5,,usr:
```

Table 90. Powerup.ini Example. Send OS on Power-up

```
'Load an operating system (.obj) file into FLASH as the new OS.
9,CR800.Std.28.obj
```

Table 91. Powerup.ini Example. Run Program from USB: Drive

```
'A program file is carried on an external USB: drive.
'Do not copy program file from USB:
'Run program always, erase data.
13,toobigforcpu.cr1,usb:
```

Table 92. Powerup.ini Example. Run Program Always, Erase Data

```
'Run a program file always, erase data.
13,pwrup_1.cr1,cpu:
```

Table 93. Powerup.ini Example. Run Program Now, Erase Data

```
'Run a program file now, erase data now.
14,run.cr1,cpu:
```

Power-up.ini Execution

After **powerup.ini** is processed, the following rules determine what CR800 program to run:

- If the run-now program is changed, then it is the program that runs.
- If no change is made to run-now program, but run-on-power-up program is changed, the new run-on-power-up program runs.
- If neither run-on-power-up nor run-now programs are changed, the previous run-on-power-up program runs.

8.3.4.5 File Management Q & A

Q: How do I hide a program file on the CR800 without using the CRBasic **FileManage()** instruction?

A: Use the *CoraScript* *(p. 484)* **File-Control** command, or the *web API* *(p. 402)* **FileControl** command.

8.3.5 File Names

The maximum size of the file name that can be stored, run as a program, or FTP transferred in the CR800 is 59 characters. If the name is longer than 59 characters, an **Invalid Filename** error is displayed. If several files are stored, each with a long filename, memory allocated to the root directory can be exceeded before the actual memory of storing files is exceeded. When this occurs, an "insufficient resources or memory full" error is displayed.

8.3.6 File-System Errors

Table *File System Error Codes* *(p. 369)* lists error codes associated with the CR800 file system. Errors can occur when attempting to access files on any of the available drives.

Table 94. File System Error Codes

Error Code	Description
1	Invalid format
2	Device capabilities error
3	Unable to allocate memory for file operation
4	Max number of available files exceeded
5	No file entry exists in directory
6	Disk change occurred
7	Part of the path (subdirectory) was not found
8	File at EOF
9	Bad cluster encountered
10	No file buffer available
11	Filename too long or has bad chars
12	File in path is not a directory
13	Access permission, opening DIR or LABEL as file, or trying to open file as DIR or mkdir existing file
14	Opening read-only file for write
15	Disk full (can't allocate new cluster)
16	Root directory is full
17	Bad file ptr (pointer) or device not initialized
18	Device does not support this operation
19	Bad function argument supplied
20	Seek out-of-file bounds
21	Trying to mkdir an existing dir
22	Bad partition sector signature
23	Unexpected system ID byte in partition entry
24	Path already open
25	Access to uninitialized ram drive
26	Attempted rename across devices
27	Subdirectory is not empty
31	Attempted write to Write Protected disk
32	No response from drive (Door possibly open)
33	Address mark or sector not found
34	Bad sector encountered
35	DMA memory boundary crossing error
36	Miscellaneous I/O error
37	Pipe size of 0 requested
38	Memory-release error (relmem)

Table 94. File System Error Codes	
Error Code	***Description***
39	FAT sectors unreadable (all copies)
40	Bad BPB sector
41	Time-out waiting for filesystem available
42	Controller failure error
43	Pathname exceeds _MAX_PATHNAME

8.4 Data Retrieval and Telecommunications — Details

Related Topics:
- *Data Retrieval and Telecommunications — Quickstart* (p. 45)
- *Data Retrieval and Telecommunications — Overview* (p. 87)
- *Data Retrieval and Telecommunications — Details* (p. 370)
- *Data Retrieval and Telecommunication Peripherals — Lists* (p. 627)

Telecommunications, in the context of CR800 operation, is the movement of information between the CR800 and another computing device, usually a PC. The information can be data, program, files, or control commands.

Telecommunication systems require three principal components: hardware, carrier signal, and protocol. For example, a common way to communicate with the CR800 is with *PC200W* software by way of a PC COM port. In this example, hardware are the PC COM port, CR800 **RS-232** port, and a serial cable. The carrier signal is RS-232, and the protocol is PakBus®. Of these three, you will most often be required to choose only the hardware, since carrier signal and protocol are transparent in most applications.

Systems usually require a single type of hardware and carrier signal. Some applications, however, require hybrid systems of two or more hardware and signal carriers.

Contact a Campbell Scientific application engineer for assistance in configuring a telecommunication system.

Synopses of software to support telecommunication devices and protocols are found in the appendix *Support Software* (p. 630). Of special note is *Network Planner,* a *LoggerNet* client designed to simplify the configuration of PakBus telecommunication networks.

8.4.1 Protocols

The CR800 communicates with *datalogger support software* (p. 93) and other Campbell Scientific *dataloggers* (p. 621) using the *PakBus* (p. 496) protocol. See the section *Alternate Telecommunications — Details* (p. 386) for information on other supported protocols, such as TCP/IP, Modbus, etc.

8.4.2 Conserving Bandwidth

Some telecommunication services, such as satellite networks, can be expensive to send and receive information. Best practices for reducing expense include:

- Declare **Public** only those variables that need to be public.
- Be conservative with use of string variables and string variable sizes. Make string variables as big as they need to be and no more; remember the minimum is actually 24 bytes. Declare string variables **Public** and sample string variables into data tables only as needed.
- When using **GetVariables()** / **SendVariables()** to send values between dataloggers, put the data in an array and use one command to get the multiple values. Using one command to get 10 values from an array and swath of 10 is much more efficient (requires only 1 transaction) than using 10 commands to get 10 single values (requires 10 transactions).
- Set the CR800 to be a PakBus router only as needed. When the CR800 is a router, and it connects to another router like LoggerNet, it exchanges routing information with that router and, possibly (depending on your settings), with other routers in the network.
- Set PakBus beacons and verify intervals properly. For example, there is no need to verify routes every five minutes if communications are expected only every 6 hours.

8.4.3 Initiating Telecommunications (Callback)

Telecommunication sessions are usually initiated by a PC. Once telecommunication is established, the PC issues commands to send programs, set clocks, collect data, etc. Because data retrieval is managed by the PC, several PCs can have access to a CR800 without disrupting the continuity of data. PakBus® allows multiple PCs to communicate with the CR800 simultaneously when proper telecommunication networks are installed.

Typically, the PC initiates telecommunications with the CR800 with *datalogger support software* (p. 631). However, some applications require the CR800 to call back the PC (initiate telecommunications). This feature is called 'Callback'. Special *LoggerNet* (p. 631) *features* enable the PC to receive calls from the CR800.

For example, if a fruit grower wants a frost alarm, the CR800 can contact him by calling a PC, sending an email, text message, or page, or calling him with synthesized-voice over telephone. Callback has been used in applications including Ethernet, land-line telephone, digital cellular, and direct connection. Callback with telephone is well documented in *CRBasic Editor Help* (search term "callback"). For more information on other available Callback features, manuals for various telecommunication hardware may discuss Callback options. Contact a Campbell Scientific application engineer for the latest information in Callback applications.

Caution When using the ComME communication port with non-PakBus protocols, incoming characters can be corrupted by concurrent use of the CS I/O for SDC communications. PakBus communications use a low-level protocol (pause / finish / ready sequence) to stop incoming data while SDC occurs.

Non-PakBus communications include TCP/IP protocols, ModBus, DNP3, and generic, CRBasic-driven use of CS I/O.

Though usually unnoticed, a short burst of SDC communications occurs at power-up and other times when the datalogger is reset, such as when compiling a program or changing settings that require recompiling. This activity is the datalogger querying to see if the CR1000KD Keyboard Display is available.

When *DevConfig* and *PakBus Graph* retrieve settings, the CR800 queries to determine what SDC devices are connected. Results of the query can be seen in the *DevConfig* and *PakBusGraph* settings tables. SDC queries occur whether or not an SDC device is attached.

8.5 PakBus® Communications — Details

Related Topics:
- *PakBus® Communications — Overview* (p. 88)
- *PakBus® Communications — Details* (p. 372)
- *PakBus® Communications — Instructions* (p. 558)
- *PakBus Networking Guide* (available at *www.campbellsci.com/manuals* (*http://www.campbellsci.com/manuals*))

The CR800 communicates with computers or other Campbell Scientific dataloggers with PakBus. PakBus is a proprietary telecommunication protocol similar in concept to IP (Internet protocol). PakBus allows compatible Campbell Scientific dataloggers and telecommunication peripherals to seamlessly join a PakBus network.

Read More This section is provided as a primer to PakBus communications. More information is available in the appendicies *Peer-to-Peer PakBus Communications* (p. 558) and Status/Settings/DTI: PakBus Information and the *PakBus Networking Guide*, available at *www.campbellsci.com*.

8.5.1 PakBus Addresses

CR800s are assigned PakBus® address **1** as a factory default. Networks with more than a few stations should be organized with an addressing scheme that guarantees unique addresses for all nodes. One approach, demonstrated in figure *PakBus Network Addressing* (p. 373) , is to assign single-digit addresses to the first tier of nodes, double-digit to the second tier, triple-digit to the third, etc. Note that each node on a branch starts with the same digit. Devices, such as PCs, with addresses greater than 4000 are given special administrative access to the network

PakBus addresses are set using *DevConfig*, *PakBusGraph*, CR800 **Status** table, or with an CR1000KD Keyboard Display. *DevConfig* (*Device Configuration Utility*) is the primary settings editor. It requires a hardwire serial connection to a PC and allows backup of settings on the PC hard drive. *PakBusGraph* is used over a telecommunication link to change settings, but has no provision for backup.

Caution Care should be taken when changing PakBus® addresses with *PakBusGraph* or in the **Status** table. If an address is changed to an unknown value, a field visit with a laptop and *DevConfig* may be required to discover the unknown address.

8.5.2 Nodes: Leaf Nodes and Routers

- A PakBus® network consists of two to 4093 linked nodes.
- One or more leaf nodes and routers can exist in a network.

- Leaf nodes are measurement devices at the end of a branch of the PakBus network.
  - Leaf nodes can be linked to any router.
  - A leaf node cannot route packets but can originate or receive them.
- Routers are measurement or telecommunication devices that route packets to other linked routers or leaf nodes.
  - Routers can be branch routers. Branch routers only know as neighbors central routers, routers in route to central routers, and routers one level outward in the network.
  - Routers can be central routers. Central routers know the entire network. A PC running *LoggerNet* is typically a central router.
  - Routers can be router-capable dataloggers or communication devices.

The CR800 is a leaf node by factory default. It can be configured as a router by setting **IsRouter** in its **Status** table to **1** or **True**. The network shown in figure *PakBus Network Addressing* (p. 373) contains six routers and eight leaf nodes.

8.5.2.1 Router and Leaf-Node Configuration

Consult the appendix Router and Leaf-Node Hardware for a table of available PakBus® leaf-node and router devices. *LoggerNet* is configured by default as a router and can route datalogger- to-datalogger communications.

Figure 97. PakBus Network Addressing

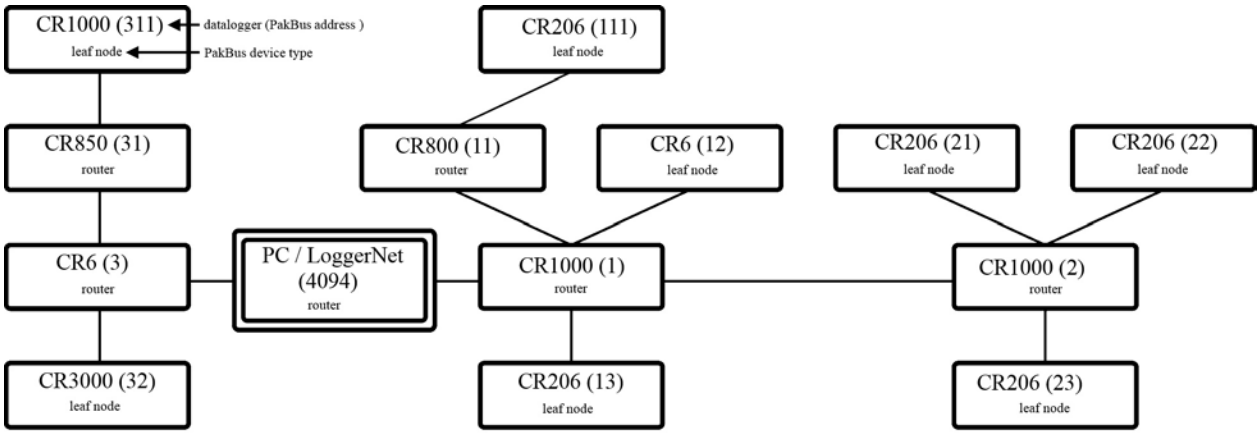

Table 95. PakBus Leaf-Node and Router Device Configuration

Network Device	*Description*	*PakBus Leaf Node*	*PakBus Router*	*PakBus Aware*	*Transparent*
CR200X	Datalogger	•			
CR6 CS I/O Port	Datalogger	•	•		
CR800	Datalogger	•	•		
CR1000	Datalogger	•	•		
CR3000	Datalogger	•	•		

Table 95. PakBus Leaf-Node and Router Device Configuration

Network Device	Description	PakBus Leaf Node	PakBus Router	PakBus Aware	Transparent
CR5000	Datalogger	•	•		
LoggerNet	Software		•		
CR6 Ethernet Port	Network link				
NL100	Serial port network link		•		•
NL115	Peripheral port network link[1]				•
NL120	Peripheral port network link[1]				•
NL200	Serial port network link				
NL240	Wireless network link				
MD485	Multidrop			•	•
RF401, RF430, RF450	Radio		•	•	•
CC640	Camera	•			
SC105	Serial interface				•
SC32B	Serial interface				•
SC932A	Serial interface				•
COM220	Telephone modem				•
COM310	Telephone modem				•
SRM-5A	Short-haul modem				•

[1]This network link is not compatible with CR800 datalogger.

8.5.3 Linking PakBus Nodes: Neighbor Discovery

New terms (see *Nodes: Leaf Nodes and Routers* (p. 372)):

- node
- link
- neighbor
- neighbor-filters
- hello
- hello-exchange
- hello-message
- hello-request

- CVI
- beacon

To form a network, nodes must establish links with neighbors (neighbors are adjacent nodes). Links are established through a process called discovery. Discovery occurs when nodes exchange hellos. A hello-exchange occurs during a hello-message between two nodes.

8.5.3.1 Hello-Message

A hello-message is a two-way exchange between nodes to negotiate a neighbor link. A hello-message is sent out in response to one or both of either a beacon or a hello-request.

8.5.3.2 Beacon

A beacon is a one-way broadcast sent by a node at a specified interval telling all nodes within hearing that a hello-message can be sent. If a node wishes to establish itself as a neighbor to the beaconing node, it will then send a hello-message to the beaconing node. Nodes already established as neighbors will not respond to a beacon.

8.5.3.3 Hello-Request

A hello-request is a one-way broadcast. All nodes hearing a hello-request (existing and potential neighbors) will issue a hello-message to negotiate or re-negotiate a neighbor relationship with the broadcasting node.

8.5.3.4 Neighbor Lists

PakBus devices in a network can be configured with a neighbor list. The CR800 sends out a hello-message to each node in the list whose *CVI* *(p. 485)* has expired at a random interval[1]. If a node responds, a hello-message is exchanged and the node becomes a neighbor.

Neighbor filters dictate which nodes are neighbors and force packets to take routes specified by the network administrator. *LoggerNet*, which is a PakBus node, derives its neighbor filter from link information in the *LoggerNet Setup* device map.

[1]Interval is a random number of seconds between the interval and two times the interval, where the interval is the CVI (if non-zero) or 300 seconds if the CVI setting is set to zero.

8.5.3.5 Adjusting Links

PakBusGraph, a client of *LoggerNet*, is particularly useful when testing and adjusting PakBus routes. Paths established by way of beaconing may be redundant and vary in reliability. Redundant paths can provide backup links in the event the primary path fails. Redundant and unreliable paths can be eliminated by activating neighbor-filters in the various nodes and by disabling some beacons.

8.5.3.6 Maintaining Links

Links are maintained by means of the *CVI* (p. 485). The CVI can be specified in each node with the **Verify Interval** setting in *DevConfig* (**ComPorts Settings**). The following rules apply:

Note During the hello-message, a CVI must be negotiated between two neighbors. The negotiated CVI is the lesser of the first node's CVI and 6/5ths of the neighbor's CVI.

- If **Verify Interval** = **0**, then CVI = 2.5 x **Beacon Interval**
- If **Verify Interval** = **60**, then CVI = 60 seconds
- If **Beacon Interval** = **0** and **Verify Interval** = **0**, then CVI = 300 seconds
- If the router or master does not hear from a neighbor for one CVI, it begins again to send a hello-message to that node at the random interval.

Users should base the **Verify Interval** setting on the timing of normal communications such as scheduled *LoggerNet*-data collections or datalogger-to-datalogger communications. The idea is to not allow the CVI to expire before normal communications. If the CVI expires, the devices will initiate hello-exchanges in an attempt to regain neighbor status, which will increase traffic on the network.

8.5.4 PakBus Troubleshooting

Various tools and methods have been developed to assist in troubleshooting PakBus networks.

8.5.4.1 Link Integrity

With beaconing or neighbor-filter discovery, links are established and verified using relatively small data packets (hello-messages). When links are used for regular telecommunications, however, longer messages are used. Consequently, a link may be reliable enough for discovery using hello-messages but unreliable with the longer messages or packets. This condition is most common in radio networks, particularly when maximum packet size is >200.

PakBus communications over marginal links can often be improved by reducing the size of the PakBus packets with the **Max Packet Size** setting in *DevConfig* **Advanced** tab. Best results are obtained when the maximum packet sizes in both nodes are reduced.

8.5.4.1.1 Automatic Packet-Size Adjustment

The BMP5 file-receive transaction allows the BMP5 client (*LoggerNet*) to specify the size of the next fragment of the file that the CR800 sends.

Note PakBus uses the file-receive transaction to get table definitions from the datalogger.

Because *LoggerNet* must specify a size for the next fragment of the file, it uses whatever size restrictions that apply to the link.

Hence, the size of the responses to the file-receive commands that the CR800 sends is governed by the **Max Packet Size** setting for the datalogger as well as that of any of its parents in the *LoggerNet* network map. Note that this calculation also takes into account the error rate for devices in the link.

BMP5 data-collection transaction does not provide any way for the client to specify a cap on the size of the response message. This is the main reason why the **Max Packet Size** setting exists. The CR800 can look at this setting at the point where it is forming a response message and cut short the amount of data that it would normally send if the setting limits the message size.

8.5.4.2 Ping (PakBus)

Link integrity can be verified with the following procedure by using *PakBusGraph* **Ping Node**. Nodes can be pinged with packets of 50, 100, 200, or 500 bytes.

Note Do not use packet sizes greater than 90 when pinging with 100 mW radio modems and radio enabled dataloggers. See the appendix *Data Retrieval and Telecommunication Peripherals — Lists* (p. 627).

Pinging with ten repetitions of each packet size will characterize the link. Before pinging, all other network traffic (scheduled data collections, clock checks, etc.) should be temporarily disabled. Begin by pinging the first layer of links (neighbors) from the PC / *LoggerNet* router, then proceed to nodes that are more than one hop away. Table *PakBus Link-Performance Gage* (p. 377) provides a link-performance gage.

Table 96. PakBus Link-Performance Gage

500 byte Pings Sent	*Successes*	*Link Status*
10	10	excellent
10	9	good
10	7-8	adequate
10	<7	marginal

8.5.4.3 Traffic Flow

Keep beacon intervals as long as possible with higher traffic (large numbers of nodes and / or frequent data collection). Long beacon intervals minimize collisions with other packets and resulting retries. The minimum recommended **Beacon Interval** setting is **60** seconds. If communication traffic is high, consider setting beacon intervals of several minutes. If data throughput needs are great, maximize data bandwidth by creating some branch routers, or by eliminating beacons altogether and setting up neighbor filters.

8.5.5 LoggerNet Network-Map Configuration

As shown in figure *Flat Map* (p. 378) and figure *Tree Map* (p. 378), the essential element of a PakBus network device map in *LoggerNet* is the **PakBusPort**. After adding the root port (COM, IP, etc), add a PakBusPort and the dataloggers.

Figure 98. Flat Map

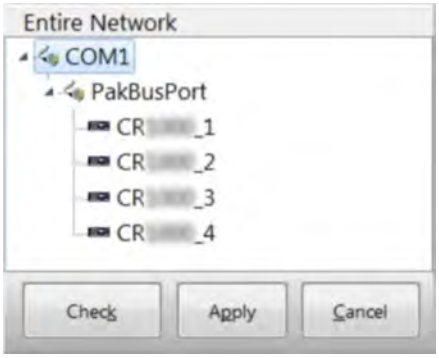

Figure 99. Tree Map

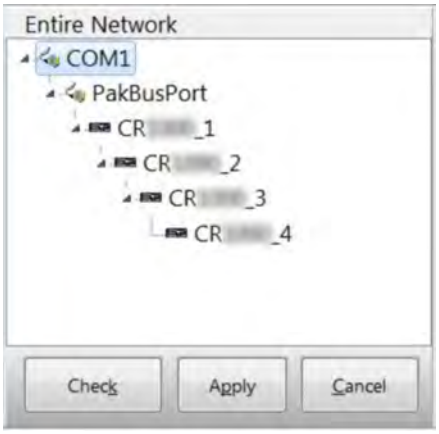

The difference between the two configurations is that the flat map configures the router with static routes that report that all of the dataloggers are neighbours to the server. The tree map configures static routes wherein "CR800" is configured as a neighbour and "CR800_2", "CR800_3", and "CR800_4" are configured to use "CR800" as the router. Deeper nesting, while allowed, is meaningless in terms of PakBus because PakBus does not allow dictation of the entire communication path. You can specify the router address for only the first hop.

Within the server, dynamically discovered routes take precedence over static routes, so once the network is learned, communications will work smoothly. However, having the correct static route to begin is often crucial because an attempt to ring a false neighbor can time out before routing can be discovered from the real neighbor.

Stated another way, use the tree configuration when communication requires routers. The shape of the map serves to disallow a direct *LoggerNet* connection to CR800_2 and CR800_3, and it implies constrained routes that will probably be established by user-installed neighbor filters in the routers. This assumes that *LoggerNet* beacons are turned off. Otherwise, with a default address of 4094, *LoggerNet* beacons will penetrate the neighbor filter of any in-range node.

8.5.6 PakBus LAN Example

To demonstrate PakBus networking, a small LAN (Local Area Network) of CR800s can be configured as shown in figure *Configuration and Wiring of PakBus LAN* (p. 379). A PC running *LoggerNet* uses the **RS-232** port of the first CR800 to communicate with all CR800s. All *LoggerNet* functions, such as send programs, monitor measurements, and collect data, are available to each CR800. CR800s can also be programmed to exchange data with each other (the data exchange feature is not demonstrated in this example).

8.5.6.1 LAN Wiring

Use three-conductor cable to connect CR800s as shown in figure *Configuration and Wiring of CR800 LAN* (p. 379). Cable length between any two CR800s must be less than 25 feet (7.6 m). **COM1 Tx** (transmit) and **Rx** (receive) are CR800 terminals **C1** and **C2**, respectively; **COM2 Tx** and **Rx** are terminals **C3** and **C4**, respectively. **Tx** from a CR800 is connected to **Rx** of an adjacent CR800.

Figure 100. Configuration and Wiring of PakBus LAN

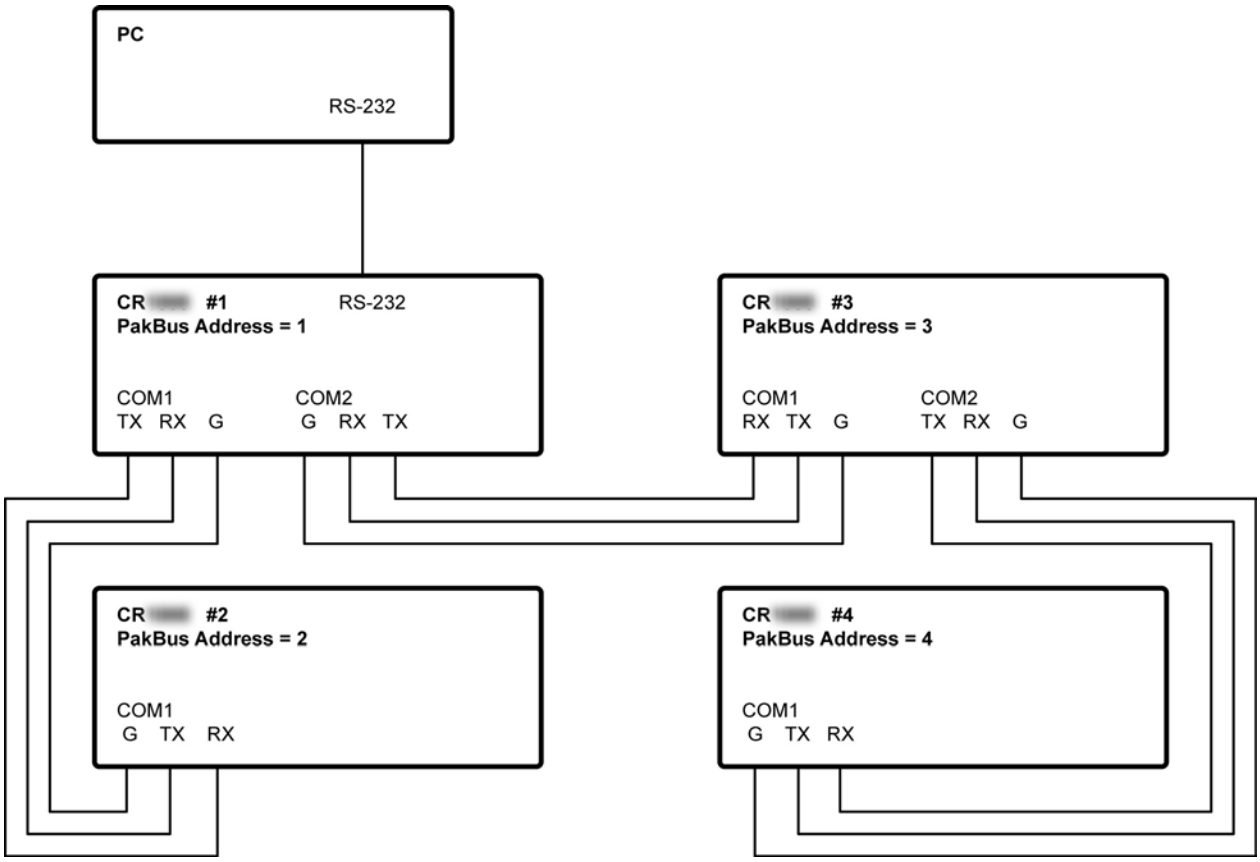

8.5.6.2 LAN Setup

Configure CR800s before connecting them to the LAN:

1. Start *Device Configuration Utility* (*DevConfig*). Click on **Device Type**: select **CR800**. Follow on-screen instructions to power CR800s and connect them to the PC. Close other programs that may be using the PC COM port, such as *LoggerNet*, *PC400*, *PC200W*, *HotSync*, etc.
2. Click on the **Connect** button at the lower left.
3. Set settings using *DevConfig* as outlined in table *PakBus-LAN Example Datalogger-Communication Settings* (p. 381). Leave unspecified settings at default values. Example *DevConfig* screen captures are shown in figure *DevConfig Deployment | Datalogger Tab* (p. 380) through figure *DevConfig Deployment | Advanced Tab* (p. 381). If the CR800s are not new, upgrading the operating system or setting factory defaults before working this example is advised.

Figure 101. DevConfig Deployment Tab

Figure 102. DevConfig Deployment | ComPorts Settings Tab

Figure 103. DevConfig **Deployment | Advanced** *Tab*

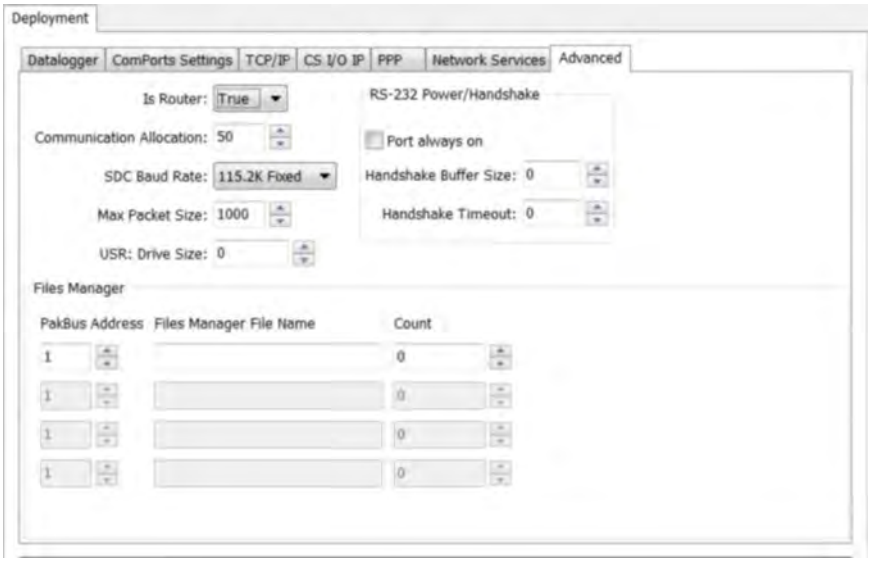

Table 97. PakBus-LAN Example Datalogger-Communication Settings

Software→	*Device Configuration Utility (DevConfig)*								
Tab→	**Deployment**								
Sub-Tab→	**Datalogger**	**ComPort Settings**							Advanced
Setting→	**PakBus Adr**	**COM1**				**COM2**			Is Router
Sub-Setting→		**Baud Rate**	Neighbors[1]			**Baud Rate**	Neighbors[1]		
Datalogger ↓			Begin:	End:			Begin:	End:	
CR800_1	**1**	**115.2K Fixed**	**2**	**2**		**115.2K Fixed**	**3**	**4**	Yes
CR800_2	**2**	**115.2K Fixed**	**1**	**1**		**Disabled**			No
CR800_3	**3**	**115.2K Fixed**	**1**	**1**		**115.2K Fixed**	**4**	**4**	Yes
CR800_4	**4**	**115.2K Fixed**	**3**	**3**		**Disabled**			No

[1]Setup can be simplified by setting all neighbor lists to Begin: 1 End: 4.

8.5.6.3 LoggerNet Setup

*Figure 104. LoggerNet Network-Map Setup: **COM** port*

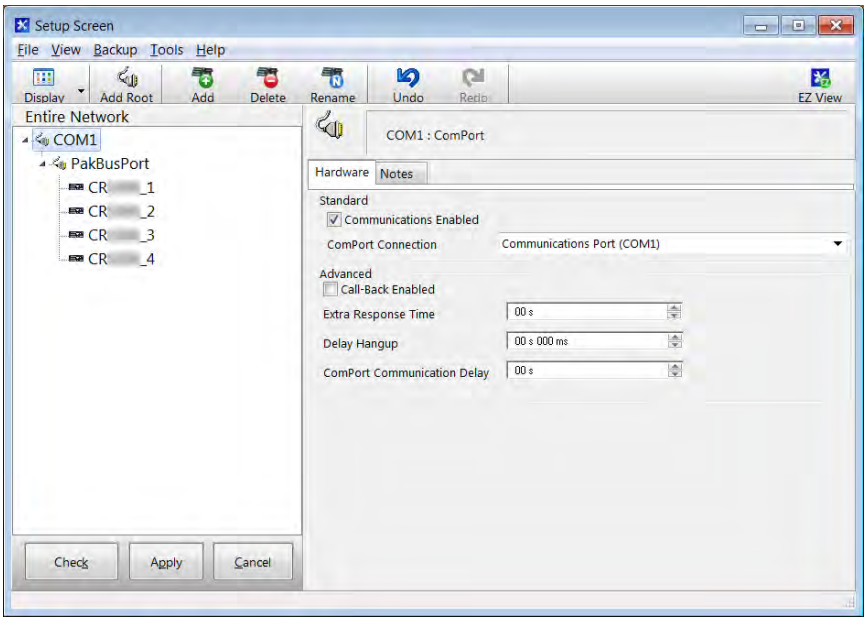

In *LoggerNet Setup*, click *Add Root* and add a **ComPort**. Then **Add** a **PakBusPort**, and (4) **CR800** dataloggers to the device map as shown in figure *LoggerNet Device-Map Setup* *(p. 382).*

Figure 105. LoggerNet Network-Map Setup: ***PakBusPort***

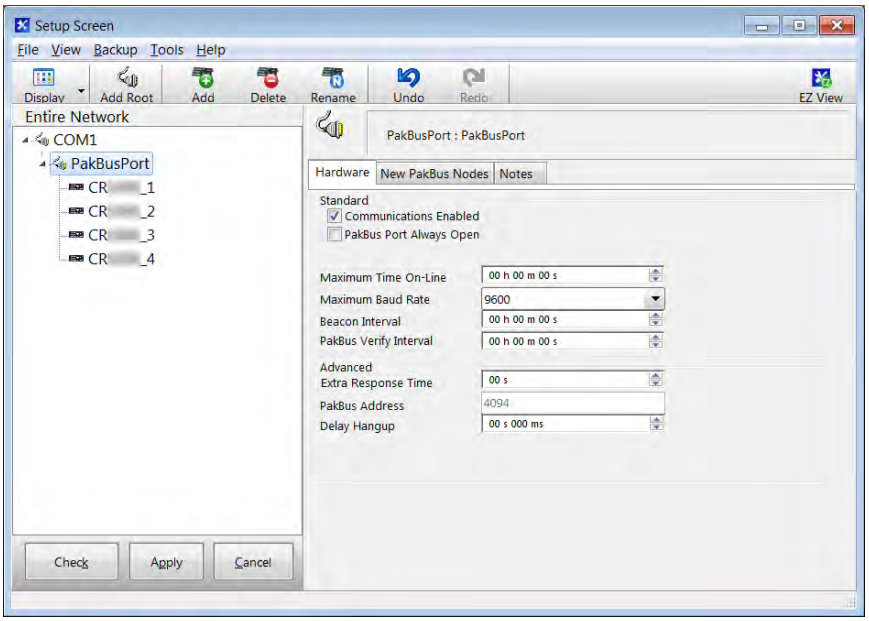

As shown in figure *LoggerNet Device Map Setup: PakBusPort* (p. 383), set the PakBusPort maximum baud rate to **115200**. Leave other settings at the defaults.

Figure 106. LoggerNet Network-Map Setup: Dataloggers

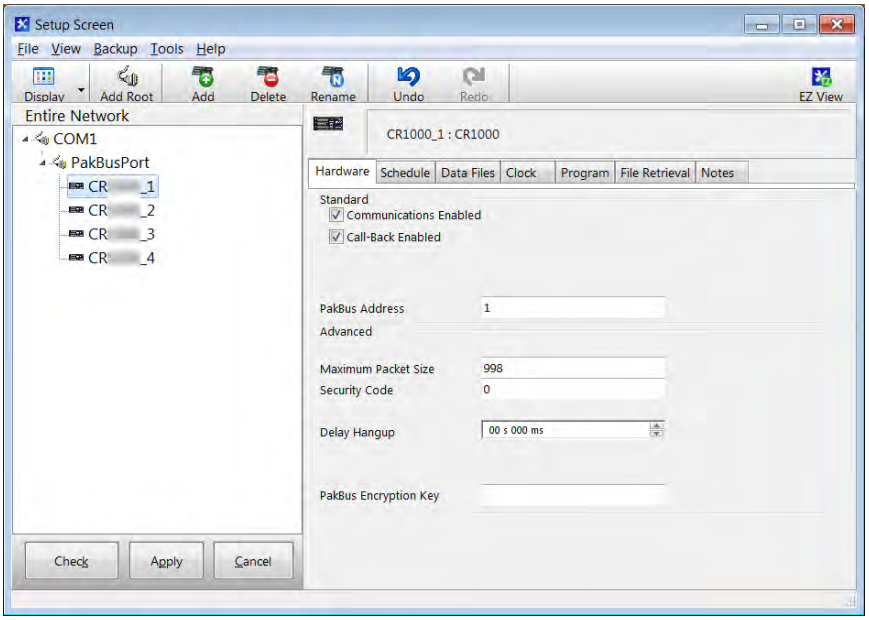

As shown in figure *LoggerNet Device-Map Setup: Dataloggers* (p. 383), set the PakBus® address for each CR800 as listed in table *PakBus-LAN Example Datalogger-Communication Settings* (p. 381).

8.5.7 Route Filters

The Route Filters setting restricts routing or processing of some PakBus message types so that a "state changing" message can only be processed or forwarded by this CR800 if the source address of that message is in one of the source ranges and the destination address of that message is in the corresponding destination range. If no ranges are specified (the default), the CR800 will not apply any routing restrictions. "State changing" message types include set variable, table reset, file control send file, set settings, and revert settings.

For example, if this setting was set to a value of **(4094, 4094, 1, 10)**, the CR800 would only process or forward "state changing" messages that originated from address 4094 and were destined to an address in the range between one and ten.

This is displayed and parsed using the following formal syntax:

```
route-filters := { "(" source-begin "," source-end ","
dest-begin "," dest-end ")" }.
source-begin  := uint2. ; 1 < source-begin <= 4094
source-end := uint2. ; source-begin <= source-end <= 4094
dest-begin := uint2. ; 1 < dest-begin <= 4094
dest-end   := uint2. ; dest-begin <= dest-end <= 4094
```

8.5.8 PakBusRoutes

PakBusRoutes() lists the routes (in the case of a router), or the router neighbors (in the case of a leaf node), that were known to the CR800 at the time the setting was read. Each route is represented by four components separated by commas and enclosed in parentheses:

```
PakBusRoutes(port, via neighbor adr, pakbus adr, response time)
```

Descriptions of **PakBusRoutes()** parameters:

port

Specifies a numeric code for the port the router will use:

Table 98. Router Port Numbers

Port Description	***Numeric Code***
ComRS232	1
ComME	2
ComSDC6 (Com310)	3
ComSDC7	4
ComSDC8	5
ComSDC9 (Com320)	6
ComSDC10	7
ComSDC11	8
Com1 (C1,C2)	9
Com2 (C3,C4)	10
IP[1]	101,102,…

[1] If the value of the port number is ≥ 101, the connection is made through PakBus/TCP, either by the CR800 executing a **TCPOpen()** instruction or by having a connection made to the PakBus/TCP CR800 service.

via neighbor adr

Specifies address of neighbor / router to be used to send messages for this route. If the route is for a neighbor, this value is the same as the address.

pakbus adr

For a router, specifies the address the route reaches. If a leaf node, this is ***0***.

response time

For a router, specifies time in milliseconds that is allowed for the route. If a leaf node, this is ***0***.

8.5.9 Neighbors

Settings Editor name: Neighbors Allowed xxx

Array of integers indicating PakBus neighbors for comumunication ports:

RS-232, ME, SDC7, SDC8, SDC10, SDC11
Com1 (C1,C2)
Com2 (C3,C4)

This setting specifies, for a given port, the explicit list of PakBus node addresses that the CR800 will accept as neighbors. If the list is empty (the default condition), any node is accepted as a neighbor. This setting will not affect the acceptance of a neighbor if that neighbor address is greater than 3999. The formal syntax for this setting follows:

```
neighbor := { "(" range-begin "," range-end ")" }.
range-begin := pakbus-address. ;
range-end := pakbus-address.
pakbus-address := number. ; 0 < number < 4000
```

If more than 10 neighbors are in the allowed list and the beacon interval is **0**, the beacon interval is changed to **60** seconds and beaconing is used for neighbor discovery instead of directed hello requests that consume communication memory.

8.5.10 PakBus Encryption

Two PakBus devices can exchange encrypted commands and data. Encryption uses the AES-128 algorithm. Routers and other leaf nodes do not need to be set for encryption. The CR800 has a setting accessed through *DevConfig* (p. 109) that sets it to send and receive only encrypted commands and data. *LoggerNet* (p. 631), likewise, has a setting attached to the specific station that enables it to send and receive only encrypted commands and data. Header level information needed for routing is not encrypted. An encrypted CR800 can also communicate with an unencrypted datalogger. Use an **EncryptExempt()** instruction in the CRBasic program to define one or more PakBus addresses to which encrypted messages will not be sent.

Campbell Scientific products supporting PakBus encryption include the following:

- LoggerNet 4.2
- CR1000 datalogger (OS26 and later)
- CR3000 datalogger (OS26 and later)
- CR800 series dataloggers (OS26 and later)
- CR800 series dataloggers (OS1 and later)

Device Configuration Utility (*DevConfig*) v. 2.04 and later

- *Network Planner* v. 1.6 and later.

Portions of the protocol to which PakBus encryption is applied include:

- All BMP5 messages
- All settings related messages

Note Basic PakBus messages such as **Hello**, **Hello Request**, **Send Neighbors**, **Get Neighbors**, and **Echo** are NOT encrypted.

The PakBus encryption key can be set in the CR800 datalogger through:

- *DevConfig* **Deployment** tab
- *DevConfig* **Settings Editor** tab
- *PakBusGraph* settings editor dialog
- Keyboard display

Be careful to record the encryption key in a secure location. If the encryption key is lost, it needs to be reset. Reset the key on the keyboard display by deleting the bullet characters that appear in the field, then enter the new key.

Note Encryption key cannot be set through the CRBasic program.

Setting the encryption key in *datalogger support software* (p. 485) (*LoggerNet 4.2* and higher):

- Applies to CR1000, CR3000, CR800 series, and CR800 dataloggers, and PakBus routers, and PakBus port device types.
- Can be set through the *LoggerNet* **Set Up** screen, *Network Planner*, or *CoraScript* (only *CoraScript* can set the setting for a PakBus port).

Note Setting the encryption key for a PakBus port device will force all messages it sends to use encryption.

8.6 Alternate Telecommunications — Details

Related Topics:
- *Alternate Telecommunications — Overview* (p. 89)
- *Alternate Telecommunications — Details* (p. 386)

The CR800 communicates with *datalogger support software* (p. 93) and other Campbell Scientific *dataloggers* (p. 621) using the *PakBus* (p. 496) protocol. Modbus, DNP3, TCP/IP, and several industry-specific protocols are also supported. CAN bus is supported when using the Campbell Scientific *SDM-CAN* (p. 627)

communication module.

8.6.1 DNP3 — Details

Related Topics:
- *DNP3 — Overview* (p. 90)
- *DNP3 — Details* (p. 387)

This section is slated for a major update in 2015.

8.6.1.1 DNP3 Introduction

The CR800 is DNP3 SCADA compatible. DNP3 is a SCADA protocol primarily used by utilities, power-generation and distribution networks, and the water- and wastewater-treatment industry.

Distributed Network Protocol (DNP) is an open protocol used in applications to ensure data integrity using minimal bandwidth. DNP implementation in the CR800 is DNP3 Level-2 Slave Compliant with some of the operations found in a Level-3 implementation. A standard CR800 program with DNP instructions will take arrays of real time or processed data and map them to DNP arrays in integer or binary format. The CR800 responds to any DNP master with the requested data or sends unsolicited responses to a specific DNP master. DNP communications are supported in the CR800 through the RS-232 port, **COM1** or **COM2** or over TCP, taking advantage of multiple communication options compatible with the CR800, e.g., RF, cellular phone, satellite. DNP3 state and history are preserved through power and other resets in non-volatile memory.

DNP SCADA software enables CR800 data to move directly into a database or display screens. Applications include monitoring weather near power transmission lines to enhance operational decisions, monitoring and controlling irrigation from a wastewater-treatment plant, controlling remote pumps, measuring river flow, and monitoring air movement and quality at a power plant.

8.6.1.2 Programming for DNP3

CRBasic example *Implementation of DNP3* (p. 389) lists CRBasic code to take ***Iarray()*** analog data and ***Barray()*** binary data (status of control port 5) and map them to DNP arrays. The CR800 responds to a DNP master with the specified data or sends unsolicited responses to DNP Master 3.

8.6.1.2.1 Declarations (DNP3 Programming)

Table *DNP3 Implementation — Data Types Required to Store Data in Public Tables for Object Groups* (p. 387) shows object groups supported by the CR800 DNP implementation, and the required data types. A complete list of groups and variations is available in *CRBasic Editor Help* for **DNPVariable()**.

Table 99. DNP3 Implementation — Data Types Required to Store Data in Public Tables for Object Groups		
Data Type	***Group***	***Description***
Boolean	1	Binary input
	2	Binary input change
	10	Binary output
	12	Control block
Long	30	Analog input
	32	Analog change event
	40	Analog output status
	41	Analog output block
	50	Time and date
	51	Time and date CTO

8.6.1.2.2 CRBasic Instructions (DNP3)

Complete descriptions and options of commands are available in *CRBasic Editor Help*.

DNP()

Sets the CR800 as a DNP slave (outstation/server) with an address and DNP3-dedicated COM port. Normally resides between **BeginProg** and **Scan()**, so it is executed only once. Example at CRBasic example *Implementation of DNP3* (p. 389), line 20.

Syntax

```
DNP(ComPort, BaudRate, DNPSlaveAddr)
```

DNPVariable()

Associates a particular variable array with a DNP object group. When the master polls the CR800, it returns all the variables specified along with their specific groups. Also used to set up event data, which is sent to the master whenever the value in the variable changes. Example at CRBasic example *Implementation of DNP3* (p. 389), line 24.

Syntax

```
DNPVariable(Source, Swath, DNPObject, DNPVariation, DNPClass,
    DNPFlag, DNPEvent, DNPNumEvents)
```

DNPUpdate()

Determines when DNP slave (outstation/server) will update its arrays of DNP elements. Specifies the address of the DNP master to which are sent unsolicited responses (event data). Must be included once within a **Scan()** / **NextScan** for the DNP slave to update its arrays. Typically placed in a program after the elements in the array are updated. The CR800 will respond to any DNP master regardless of its address.

Syntax

```
DNPUpdate (DNPSlaveAddr,DNPMasterAddr)
```

8.6.1.2.3 Programming for DNP3 Data Acquisition

As shown in CRBasic example *Implementation of DNP3* (p. 389), program the CR800 to return data when polled by the DNP3 master using the following three actions:

1. Place **DNP()** at the beginning of the program between **BeginProg** and **Scan()**. Set COM port, baud rate, and DNP3 address.
2. Setup the variables to be sent to the master using **DNPVariable()**. Dual instructions cover static (current values) and event (previous ten records) data.
   - For analog measurements:
     ```
     DNPVariable(Variable_Name,Swath,30,2,0,&B00000000,0,0)
     DNPVariable(Variable_Name,Swath,32,2,3,&B00000000,0,10)
     ```
   - For digital measurements (control ports):
     ```
     DNPVariable(Variable_Name,Swath,1,2,0,&B00000000,0,0)
     DNPVariable(Variable_Name,Swath,32,2,3,&B00000000,0,10)
     ```
3. Place **DNPUpdate()** after **Scan()**, inside the main scan. The DNP3 master is notified of any change in data each time **DNPUpdate()** runs; e.g., for a 10 second scan, the master is notified every 10 seconds.

CRBasic Example 65. Implementation of DNP3

```
'This program example demonstrates a basic implementation of DNP3 in the CR800.  The CR800
'is programmed to return data over IP when polled by the DNP3 master.  Essential elements
'of the program are as follows:

'  1. DNP() instruction is placed at the beginning of the program between BeginProg
'     and Scan().  COM port, baud rate, and DNP3 address are set.
'  2. Variables are set up to be sent to the master using DNPVariable(). Dual instructions
'     cover static data (current values) and event data (previous ten records). Following
'     are the sets of dual instructions for analog and digital measurements:

'      'For analog measurements:
'        'DNPVariable(Variable_Name,Swath,30,2,0,&B00000000,0,0)
'        'DNPVariable(Variable_Name,Swath,32,2,3,&B00000000,0,10)

'      'For digital measurements (control ports):
'        'DNPVariable(Variable_Name,Swath,1,2,0,&B00000000,0,0)
'        'DNPVariable(Variable_Name,Swath,32,2,3,&B00000000,0,10)

'  3. DNPUpdate() is placed after Scan(), inside the main scan. The DNP3 master is
'     notified of any change in data each time DNPUpdate() runs.  For example, for a 10
'     second scan, the master is notified every 10 seconds.
```

```
Public IArray(4) As Long
Public BArray(2) As Boolean

Public WindSpd
Public WindDir
Public Batt_Volt
Public PTemp_C

Units WindSpd=meter/Sec
Units WindDir=Degrees
Units Batt_Volt=Volts
Units PTemp_C=Deg C

'Main Program
BeginProg

  'DNP communication over IP at 115.2kbps. CR800 DNP address is 1.
  DNP(20000,115200,1)

  'DNPVariable(Source,Swath,DNPObject,DNPVariation,DNPClass,DNPFlag,DNPEvent,DNPNumEvents)
  DNPVariable(IArray,4,30,2,0,&B00000000,0,0)

  'Object group 30, variation 2 is used to return analog data when the CR800
  'is polled. Flag is set to an empty 8 bit number(all zeros), DNPEvent is a
  'reserved parameter and is currently always set to zero. Number of events is
  'only used for event data.
  DNPVariable(IArray,4,32,2,3,&B00000000,0,10)
  DNPVariable(BArray,2,1,1,0,&B00000000,0,0)
  DNPVariable(BArray,2,2,1,1,&B00000000,0,1)

  Scan(1,Sec,1,0)
    'Wind Speed & Direction Sensor measurements WS_ms and WindDir:
    PulseCount(WindSpd,1,1,1,3000,2,0)
    IArray(1) = WindSpd * 100
    BrHalf(WindDir,1,mV2500,1,Vx1,1,2500,True,0,_60Hz,355,0)
    If WindDir>=360 Then WindDir=0
    IArray(2) = WindDir * 100

    'Default Datalogger Battery Voltage measurement Batt_Volt:
    Battery(Batt_Volt)
    IArray(3) = Batt_Volt * 100

    'Wiring Panel Temperature measurement PTemp_C:
    PanelTemp(PTemp_C,_60Hz)
    IArray(1) =PTemp_C
    PortGet(Barray(1),5)

    'Update DNP arrays and send unsolicited requests to DNP Master address 3
    DNPUpdate(2,3)
  NextScan
EndProg
```

8.6.2 Modbus — Details

Related Topics:
- *Modbus — Overview* (p. 89)
- *Modbus — Details* (p. 391)

The CR800 supports Modbus master and Modbus slave communications for inclusion in Modbus SCADA networks. Modbus is a widely used SCADA communication protocol that facilitates exchange of information and data between computers / HMI software, instruments (RTUs) and Modbus-compatible sensors. The CR800 communicates with Modbus over RS-232, RS-485 (with a RS-232 to RS-485 adapter), and TCP.

Modbus systems consist of a master (PC), RTU / PLC slaves, field instruments (sensors), and the communication-network hardware. The communication port, baud rate, data bits, stop bits, and parity are set in the Modbus driver of the master and / or the slaves. The Modbus standard has two communication modes, RTU and ASCII. However, CR800s communicate in RTU mode exclusively.

Field instruments can be queried by the CR800. Because Modbus has a set command structure, programming the CR800 to get data from field instruments is much simpler than from serial sensors. Because Modbus uses a common bus and addresses each node, field instruments are effectively multiplexed to a CR800 without additional hardware.

A CR800 goes into sleep mode after 40 seconds of communication inactivity. Once asleep, two packets are required before the CR800 will respond. The first packet awakens the CR800; the second packet is received as data. CR800s, through *DevConfig* or the **Status** table (see the appendix *Status Table and Settings* (p. 577)) can be set to keep communication ports open and awake, but at higher power usage.

8.6.2.1 Modbus Terminology

Table *Modbus to Campbell Scientific Equivalents* (p. 391) lists terminology equivalents to aid in understanding how CR800s fit into a SCADA system.

Table 100. Modbus to Campbell Scientific Equivalents

Modbus Domain	*Data Form*	*Campbell Scientific Domain*
Coils	Single bit	Ports, flags, boolean variables
Digital registers	16 bit word	Floating point variables
Input registers	16 bit word	Floating point variables
Holding registers	16 bit word	Floating point variables
RTU / PLC		CR800
Master		Usually a computer
Slave		Usually a CR800
Field instrument		Sensor

8.6.2.1.1 Glossary of Modbus Terms

Term. coils (00001 to 09999)

Originally, "coils" referred to relay coils. In CR800s, coils are exclusively terminals configured for control, software flags, or a Boolean-variable array. Terminal configured for control are inferred if parameter 5 of the **ModbusSlave()** instruction is set to 0. Coils are assigned to Modbus registers **00001** to **09999**.

Term. digital registers 10001 to 19999

Hold values resulting from a digital measurement. Digital registers in the Modbus domain are read-only. In the Campbell Scientific domain, the leading digit in Modbus registers is ignored, and so are assigned together to a single **Dim-** or **Public-**variable array (read / write).

Term. input registers 30001 to 39999

Hold values resulting from an analog measurement. Input registers in the Modbus domain are read-only. In the Campbell Scientific domain, the leading digit in Modbus registers is ignored, and so are assigned together to a single **Dim**- or **Public**- variable array (read / write).

Term. holding registers 40001 to 49999

Hold values resulting from a programming action. Holding registers in the Modbus domain are read / write. In the Campbell Scientific domain, the leading digit in Modbus registers is ignored, and so are assigned together to a single **Dim** or **Public** variable array (read / write).

Term. RTU / PLC

Remote Telemetry Units (RTUs) and Programmable Logic Controllers (PLCs) were at one time used in exclusive applications. As technology increases, however, the distinction between RTUs and PLCs becomes more blurred. A CR800 fits both RTU and PLC definitions.

8.6.2.2 Programming for Modbus

8.6.2.2.1 Declarations (Modbus Programming)

Table *CRBasic Ports, Flags, Variables, and Modbus Registers* *(p. 392)* shows the linkage between terminals configured for control, flags and Boolean variables and Modbus registers. Modbus does not distinguish between terminals configured for control, flags, or Boolean variables. By declaring only terminals configured for control, or flags, or Boolean variables, the declared feature is addressed by default. A typical CRBasic program for a Modbus application will declare variables and ports, or variables and flags, or variables and Boolean variables.

Table 101. CRBasic Ports, Flags, Variables, and, Modbus Registers		
CR800 Feature	***Example CRBasic Declaration***	***Equivalent Example Modbus Register***
Terminal configured for control	`Public Port(4)`	00001 to 00005
Flag	`Public Flag(17)`	00001 to 00018
Boolean variable	`Public ArrayB(56) as Boolean`	00001 to 00057
Variable	`Public ArrayV(20)`[1]	40001 to 40041[1] **or** 30001 to 30041[1]
[1] Because of byte-number differences, each CR800 domain variable translates to two Modbus domain input / holding registers.		

8.6.2.2.2 CRBasic Instructions (Modbus)

Complete descriptions and options of commands are available in *CRBasic Editor Help*.

ModbusMaster()

Sets up a CR800 as a Modbus master to send or retrieve data from a Modbus slave.

Syntax

```
ModbusMaster(ResultCode, ComPort, BaudRate, ModbusAddr,
    Function, Variable, Start, Length, Tries, TimeOut)
```

ModbusSlave()

Sets up a CR800 as a Modbus slave device.

Syntax

```
ModbusSlave(ComPort, BaudRate, ModbusAddr, DataVariable,
    BooleanVariable)
```

MoveBytes()

Moves binary bytes of data into a different memory location when translating big-endian to little-endian data. See the appendix *Endianness* *(p. 619).*

Syntax

```
MoveBytes(Dest, DestOffset, Source, SourceOffset, NumBytes)
```

8.6.2.2.3 Addressing (ModbusAddr)

Modbus devices have a unique address in each network. Addresses range from **1** to **247**. Address **0** is reserved for universal broadcasts. When using the NL240, use the same number as the Modbus and PakBus address.

8.6.2.2.4 Supported Modbus Function Codes

Modbus protocol has many function codes. CR800 commands support the following.

Table 102. Supported Modbus Function Codes		
Code	***Name***	***Description***
01	Read coil/port status	Reads the on/off status of discrete output(s) in the ModBusSlave
02	Read input status	Reads the on/off status of discrete input(s) in the ModBusSlave
03	Read holding registers	Reads the binary contents of holding register(s) in the ModBusSlave
04	Read input registers	Reads the binary contents of input register(s) in the ModBusSlave
05	Force single coil/port	Forces a single coil/port in the ModBusSlave to either on or off
06	Write single register	Writes a value into a holding register in the ModBusSlave
15	Force multiple coils/ports	Forces multiple coils/ports in the ModBusSlave to either on or off
16	Write multiple registers	Writes values into a series of holding registers in the ModBusSlave

8.6.2.2.5 Reading Inverse-Format Modbus Registers

Some Modbus devices require reverse byte order words (CDAB vs. ABCD). This can be true for either floating point, or integer formats. Since a slave CR800 uses the ABCD format, either the master has to make an adjustment, which is sometimes possible, or the CR800 needs to output reverse-byte order words. To reverse the byte order in the CR800, use the **MoveBytes()** instruction as shown in the sample code below.

```
for i = 1 to k
  MoveBytes(InverseFloat(i),2,Float(i),0,2)
  MoveBytes(InverseFloat(i),0,Float(i),2,2)
next
```

In the example above, ***InverseFloat(i)*** is the array holding the inverse-byte ordered word (CDAB). Array ***Float(i)*** holds the obverse-byte ordered word (ABCD).

See the appendix *Endianness* *(p. 619).*

8.6.2.3 Troubleshooting (Modbus)

Test Modbus functions on the CR800 with third party Modbus software. Further information is available at the following links:

- www.simplyModbus.ca/FAQ.htm
- www.Modbus.org/tech.php
- www.lammertbies.nl/comm/info/modbus.html

8.6.2.4 Modbus over IP

Modbus over IP functionality is an option with the CR800. Contact Campbell Scientific for details.

8.6.2.5 Modbus Q and A

Q: Can Modbus be used over an RS-232 link, 7 data bits, even parity, one stop bit?

A: Yes. Precede **ModBusMaster()** / **ModBusSlave()** with **SerialOpen()** and set the numeric format of the COM port with any of the available formats, including the option of 7 data bits, even parity. **SerialOpen()** and **ModBusMaster()** can be used once and placed before **Scan()**.

Concatenating two Modbus long 16-bit variables to one Modbus long 32 bit number.

8.6.2.6 Converting Modbus 16-Bit to 32-Bit Longs

Concatenation of two Modbus long 16-bit variables to one Modbus long 32 bit number is shown in the following example.

CRBasic Example 66. Concatenating Modbus Long Variables

```
'This program example demonstrates concatenation (splicing) of Long data type variables
'for Modbus operations.  Program is compatible with the following or later operating systems:
'  CR800  OS v.3
'  CR1000 OS v.12
'  CR3000 OS v.5
'
'NOTE:  The CR800 uses big-endian word order.

'Declarations
Public Combo As Long                        'Variable to hold the combined 32-bit
Public Register(2) As Long                  'Array holds two 16-bit ModBus long
                                            'variables
                                            'Register(1) = Least Significant Word
                                            'Register(2) = Most Significant Word
Public Result                               'Holds the result of the ModBus master
                                            'query

'Aliases used for clarification
Alias Register(1) = Register_LSW            'Least significant word.
Alias Register(2) = Register_MSW            'Most significant word.

BeginProg
  'If you use the numbers below (un-comment them first)
  'Combo is read as 131073 decimal
  'Register_LSW=&h0001 'Least significant word.
  'Register_MSW=&h0002 ' Most significant word.

  Scan(1,Sec,0,0)
    'In the case of the CR800 being the ModBus master then the
    'ModbusMaster instruction would be used (instead of fixing
    'the variables as shown between the BeginProg and SCAN instructions).
    ModbusMaster(Result,COMRS232,-115200,5,3,Register(),-1,2,3,100)
```

```
    'MoveBytes(DestVariable,DestOffset,SourceVariable,SourceOffSet,
    'NumberOfBytes)
    MoveBytes(Combo,2, Register_LSW,2,2)
    MoveBytes(Combo,0, Register_MSW,2,2)
  NextScan
EndProg
```

8.6.3 TCP/IP — Details

Related Topics:
- *TCP/IP — Overview* (p. 90)
- *TCP/IP — Details* (p. 402)
- *TCP/IP — Instructions* (p. 567)
- *TCP/IP Links — List* (p. 629)

The following TCP/IP protocols are supported by the CR800 when using *network-links* (p. 629) that use the resident IP stack or when using a cell modem with the PPP/IP key enabled. More information on some of these protocols is in the following sections.

- DHCP
- DNS
- FTP
- HTML
- HTTP
- Micro-serial server
- NTCIP
- NTP
- PakBus over TCP/IP
- Ping
- POP3
- SMTP
- SNMP
- Telnet
- *Web API* (p. 402)
- XML

The most up-to-date information on implementing these protocols is contained in *CRBasic Editor Help*. For a list of CRBasic instructions, see the appendix *TCP/IP* (p. 567).

Read More Specific information concerning the use of digital-cellular modems for TCP/IP can be found in Campbell Scientific manuals for those modems. For information on available TCP/IP/PPP devices, refer to the appendix *Network Links* (p. 629) for model numbers. Detailed information on use of TCP/IP/PPP devices is found in their respective manuals (available at *www.campbellsci.com http://www.campbellsci.com*) and *CRBasic Editor Help*.

8.6.3.1 PakBus Over TCP/IP and Callback

Once the hardware has been configured, basic PakBus® communication over TCP/IP is possible. These functions include the following:

- Sending programs
- Retrieving programs
- Setting the CR800 clock
- Collecting data
- Displaying the current record in a data table

Data callback and datalogger-to-datalogger communications are also possible over TCP/IP. For details and example programs for callback and datalogger-to-datalogger communications, see the network-link manual. A listing of network-link model numbers is found in the appendix *Network Links* *(p. 629).*

8.6.3.2 Default HTTP Web Server

The CR800 has a default home page built into the operating system. The home page can be accessed using the following URL:

```
http:\\ipaddress:80
```

Note Port 80 is implied if the port is not otherwise specified.

As shown in the figure, *Preconfigured HTML Home Page* *(p. 284),* this page provides links to the newest record in all tables, including the **Status** table, **Public** table, and data tables. Links are also provided for the last 24 records in each data table. If fewer than 24 records have been stored in a data table, the link will display all data in that table.

Newest-Record links refresh automatically every 10 seconds. **Last 24-Records** link must be manually refreshed to see new data. Links will also be created automatically for any HTML, XML, and JPEG files found on the CR800 drives. To copy files to these drives, choose **File Control** from the *datalogger support software* *(p. 485)* menu.

Figure 107. Preconfigured HTML Home Page

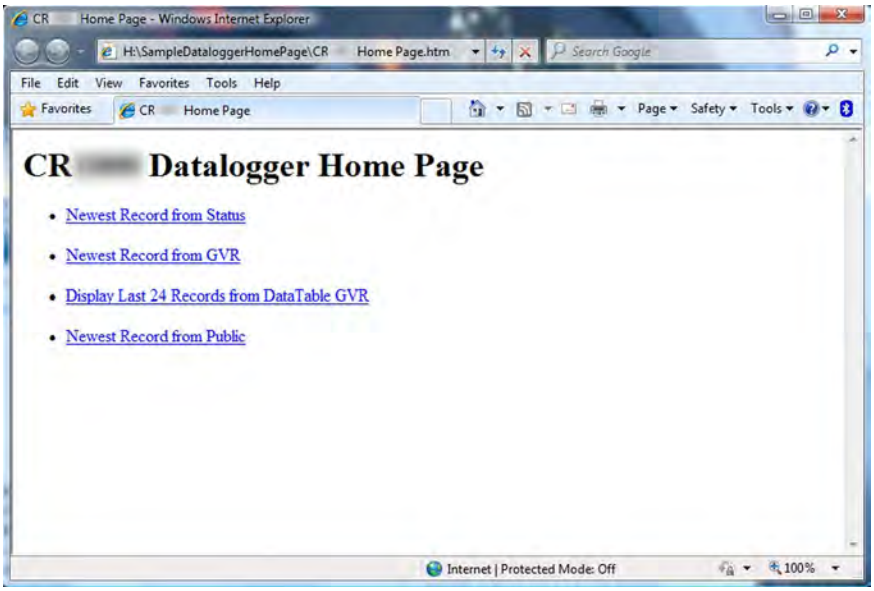

8.6.3.3 Custom HTTP Web Server

Although the default home page cannot be accessed for editing, it can be replaced with the HTML code of a customized web page. To replace the default home page, save the new home page under the name *default.html* and copy it to the datalogger. It can be copied to a CR800 drive with **File Control**. Deleting *default.html* will cause the CR800 to use the original, default home page.

The CR800 can be programmed to generate HTML or XML code that can be viewed by a web browser. CRBasic example *HTML* *(p. 286)* shows how to use the CRBasic instructions **WebPageBegin()** / **WebPageEnd** and **HTTPOut()** to create HTML code. Note that for HTML code requiring the use of quotation marks, **CHR(34)** is used, while regular quotation marks are used to define the beginning and end of alphanumeric strings inside the parentheses of the **HTTPOut()** instruction. For additional information, see the *CRBasic Editor Help*.

In this example program, the default home page is replaced by using **WebPageBegin** to create a file called default.html. The new default home page created by the program appears as shown in the figure *Home Page Created using WebPageBegin() Instruction* *(p. 285).*

The Campbell Scientific logo in the web page comes from a file called **SHIELDWEB2.JPG** that must be transferred from the PC to the CR800 CPU: drive using **File Control** in the datalogger support software.

A second web page, shown in figure *Customized Numeric-Monitor Web Page* *(p. 285)* called "monitor.html" was created by the example program that contains links to the CR800 data tables.

*Figure 108. Home Page Created Using **WebPageBegin()** Instruction*

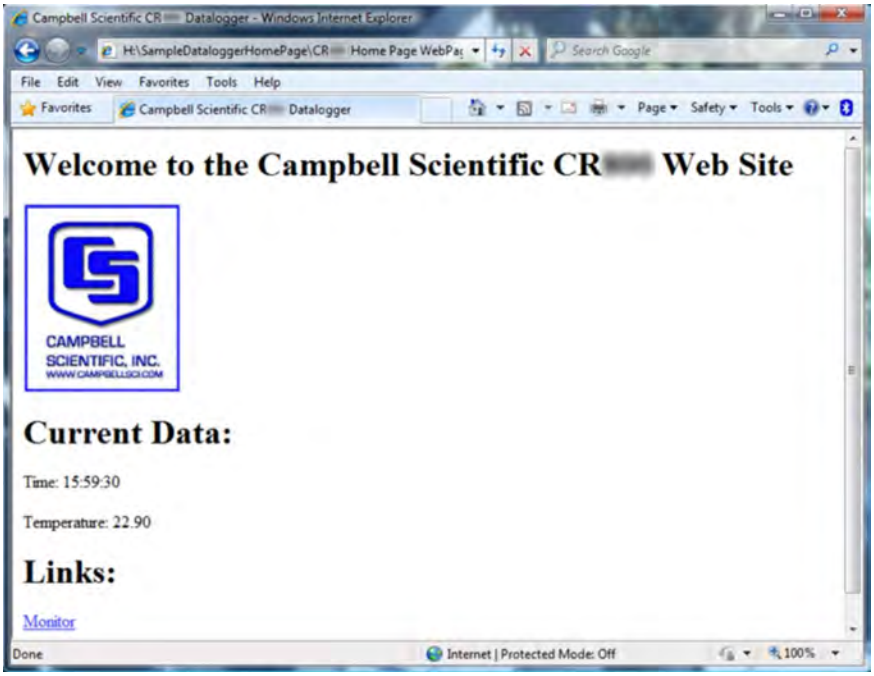

Figure 109. Customized Numeric-Monitor Web Page

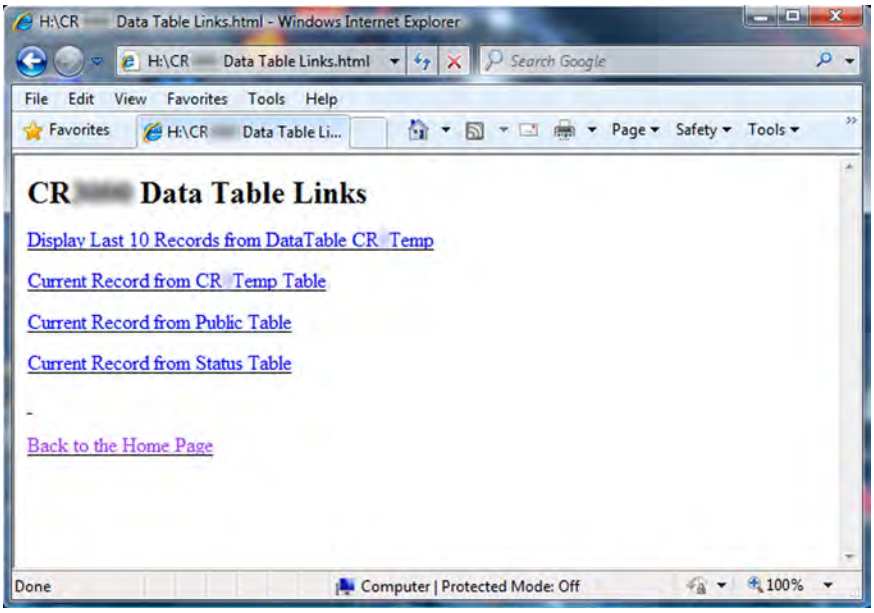

CRBasic Example 67. Custom Web Page HTML

```
'This program example demonstrates the creation of a custom web page that resides in the
'CR800. In this example program, the default home page is replaced by using WebPageBegin to
'create a file called default.html. The graphic in the web page (in this case, the Campbell
'Scientific logo) comes from a file called SHIELDWEB2.JPG. The graphic file must be copied to
'the CR800 CPU: drive using File Control in the datalogger support software.  A second web
'page is created that contains links to the CR800 data tables.

'NOTE: The "_" character used at the end of some lines allows a code statement to be wrapped
'to the next line.

Dim Commands As String * 200
Public Time(9), RefTemp,
Public Minutes As String, Seconds As String, Temperature As String

DataTable(CRTemp,True,-1)
  DataInterval(0,1,Min,10)
  Sample(1,RefTemp,FP2)
  Average(1,RefTemp,FP2,False)
EndTable

'Default HTML Page
WebPageBegin("default.html",Commands)
  HTTPOut("<html>")
  HTTPOut("<style>body {background-color: oldlace}</style>")
  HTTPOut("<body><title>Campbell Scientific CR800 Datalogger</title>")
  HTTPOut("<h2>Welcome To the Campbell Scientific CR800 Web Site!</h2>")
  HTTPOut("<tr><td style=" + CHR(34) +"width: 290px" + CHR(34) + ">")
  HTTPOut("<a href=" + CHR(34) + "http://www.campbellsci.com" + CHR(34) + ">")
  HTTPOut("<img src="+ CHR(34) +"/CPU/SHIELDWEB2.jpg"+ CHR(34) + "width=" + _
    CHR(34) +"128"+CHR(34)+"height="+CHR(34)+"155"+ CHR(34) + "class=" + _
    CHR(34) +"style1"+ CHR(34) +"/></a></td>")
  HTTPOut("<p><h2> Current Data:</h2></p>")
  HTTPOut("<p>Time: " + time(4) + ":" + minutes + ":" + seconds + "</p>")
```

```
  HTTPOut("<p>Temperature: " + Temperature + "</p>")
  HTTPOut("<p><h2> Links:</h2></p>")
  HTTPOut("<p><a href="+ CHR(34) +"monitor.html"+ CHR(34)+">Monitor</a></p>")
  HTTPOut("</body>")
  HTTPOut("</html>")
WebPageEnd

'Monitor Web Page
WebPageBegin("monitor.html",Commands)
  HTTPOut("<html>")
  HTTPOut("<style>body {background-color: oldlace}</style>")
  HTTPOut("<body>")
  HTTPOut("<title>Monitor CR800 Datalogger Tables</title>")
  HTTPOut("<p><h2>CR800 Data Table Links</h2></p>")
  HTTPOut("<p><a href="+ CHR(34) + "command=TableDisplay&table=CRTemp&records=10" + _
    CHR(34)+">Display Last 10 Records from DataTable CR1Temp</a></p>")
  HTTPOut("<p><a href="+ CHR(34) + "command=NewestRecord&table=CRTemp"+ CHR(34) + _
    ">Current Record from CRTemp Table</a></p>")
  HTTPOut("<p><a href="+ CHR(34) + "command=NewestRecord&table=Public"+ CHR(34) + _
    ">Current Record from Public Table</a></p>")
  HTTPOut("<p><a href="+ CHR(34) + "command=NewestRecord&table=Status" + CHR(34) + _
    ">Current Record from Status Table</a></p>")
  HTTPOut("<br><p><a href="+ CHR(34) +"default.html"+ CHR(34) + ">Back to the Home Page _
    </a></p>")
  HTTPOut("</body>")
  HTTPOut("</html>")
WebPageEnd

BeginProg
  Scan(1,Sec,3,0)
    PanelTemp(RefTemp,250)
    RealTime(Time())
    Minutes = FormatFloat(Time(5),"%02.0f")
    Seconds = FormatFloat(Time(6),"%02.0f")
    Temperature = FormatFloat(RefTemp, "%02.02f")
    CallTable(CRTemp)
  NextScan
EndProg
```

8.6.3.4 FTP Server

The CR800 automatically runs an FTP server. This allows *Windows® Explorer®* to access the CR800 file system with FTP, with drives on the CR800 being mapped into directories or folders. The root directory on the CR800 can be any drive, but the USR: drive is usually preferred. USR: is a drive created by allocating memory in the **USR: Drive Size** box on the **Deployment** | **Advanced** tab of the CR800 service in *DevConfig*. Files can be copied / pasted between drives. Files can be deleted through FTP.

8.6.3.5 FTP Client

The CR800 can act as an FTP client to send a file or get a file from an FTP server, such as another datalogger or web camera. This is done using the CRBasic **FTPClient()** instruction. Refer to a manual for a Campbell Scientific network link (see the appendix *Network Links* (p. 629)), available at *www.campbellsci.com*, or *CRBasic Editor Help* for details and sample programs.

8.6.3.6 Telnet

Telnet is used to access the same commands that are available through the support software *terminal emulator* (p. 504). Start a *Telnet* session by opening a DOS command prompt and type in:

```
Telnet xxx.xxx.xxx.xxx <Enter>
```

where xxx.xxx.xxx.xxx is the IP address of the network device connected to the CR800.

8.6.3.7 SNMP

Simple Network Management Protocol (SNMP) is a part of the IP suite used by NTCIP and RWIS for monitoring road conditions. The CR800 supports SNMP when a network device is attached.

8.6.3.8 Ping (IP)

Ping can be used to verify that the IP address for the network device connected to the CR800 is reachable. To use the Ping tool, open a command prompt on a computer connected to the network and type in:

```
ping xxx.xxx.xxx.xxx <Enter>
```

where xxx.xxx.xxx.xxx is the IP address of the network device connected to the CR800.

8.6.3.9 Micro-Serial Server

The CR800 can be configured to allow serial communication over a TCP/IP port. This is useful when communicating with a serial sensor over Ethernet with micro-serial server (third-party serial to Ethernet interface) to which the serial sensor is connected. See the network-link manual and the *CRBasic Editor Help* for the **TCPOpen()** instruction for more information. Information on available network links is available in the appendix *Network Links* (p. 629).

8.6.3.10 Modbus TCP/IP

The CR800 can perform Modbus communication over TCP/IP using the Modbus TCP/IP interface. To set up Modbus TCP/IP, specify port 502 as the ***ComPort*** in the **ModBusMaster()** and **ModBusSlave()** instructions. See the *CRBasic Editor Help* for more information. See *Modbus* (p. 391).

8.6.3.11 DHCP

When connected to a server with a list of IP addresses available for assignment, the CR800 will automatically request and obtain an IP address through the Dynamic Host Configuration Protocol (DHCP). Once the address is assigned, use *DevConfig*, *PakBusGraph*, *Connect*, or the CR1000KD Keyboard Display to look in the CR800 **Status** table to see the assigned IP address. This is shown under the field name ***IPInfo***.

8.6.3.12 DNS

The CR800 provides a Domain Name Server (DNS) client that can query a DNS server to determine if an IP address has been mapped to a hostname. If it has, then the hostname can be used interchangeably with the IP address in some datalogger instructions.

8.6.3.13 SMTP

Simple Mail Transfer Protocol (SMTP) is the standard for e-mail transmissions. The CR800 can be programmed to send e-mail messages on a regular schedule or based on the occurrence of an event.

8.6.3.14 Web API

The CR800 web API (**A**pplication **P**rogramming **I**nterface) is a series of *URL* (p. 506) commands that manage CR800 resources. The API facilitates the following functions:

- Data Management
  - Collect data
- Control — CRBasic program language logic can allow remote access to many control functions by means of changing the value of a variable.
  - Set variables / flags / ports
- Clock Functions — Clock functions allow a web client to monitor and set the host CR800 real time clock. Read the Time Syntax section for more information.
  - Set CR800 clock
- File Management — Web API commands allow a web client to manage files on host CR800 memory drives. Camera image files are examples of collections often needing frequent management.
  - Send programs
  - Send files
  - Collect files

API commands are also used with Campbell Scientific's RTMC web server *datalogger support software* (p. 93). The following documentation focuses on API use with the CR800. A full discussion of use of the API commands with RTMC is available in *CRBasic Editor Help*, which is one of several programs available for *PC to CR800 support* (p. 93).

8.6.3.14.1 Authentication

The CR800 passcode security scheme described in the *Security* (p. 90) section is not considered sufficiently robust for API use because of the following:

1. the security code is plainly visible in the URI, so it can be compromised by eavesdropping or viewing the monitor.

2. the range of valid security codes is 1 to 65534, so the security code can be compromised by brute force attacks.

Instead, Basic Access Authentication, which is implemented in the API, should be used with the CR800. Basic Access Authentication uses an encrypted user account file, **.csipasswd**, which is placed on the CPU: drive of the CR800.

Four levels of access are available through Basic Access Authentication:

- all access denied (Level **0**)
- all access allowed (Level **1**)
- set variables allowed (Level **2**)
- read-only access (Level **3**)

Multiple user accounts and security levels can be defined. A file named **.csipasswd** is created on the CR800 CPU: drive and edited in the *Device Configuration Utility (DevConfig)* (p. 109) software **Net Services** tab, **Edit .csipasswd File** button. When in **Datalogger .csipasswd File Editor** dialog box, pressing **Apply** after entering user names and passwords encrypts **.csipasswd** and saves it to the CR800 CPU: drive. A check box is available to set the file as hidden. If hidden when saved, the file cannot be accessed for editing.

If access to the CR800 web server is attempted without correct security credentials, the CR800 returns the error **401 Authorization Required**. This error prompts the web browser or client to display a user name and password request dialog box. If **.csipasswd** is blank or does not exist, the user name defaults to **anonymous** with no password, and the security level defaults to **read-only** (default security level can be changed in *DevConfig*). If an invalid user name or password is entered in **.csipasswd**, the CR800 web server will default to the level of access assigned to **anonymous**.

The security level associated with the user name **anonymous**, affects only API commands. For example, the API command **SetValueEx** will not function when the API security level is set to **read-only**, but the CRBasic parameter ***SetValue*** in the **WebPageBegin()** instruction will function. However, if **.csipasswd** sets a user name other than anonymous and sets a password, security will be active on API and CRBasic commands. For example, if a numeric pass code is set in the CR800 **Status** table (see *Security* (p. 90) section), and **.csipasswd** does not exist, then the pass code must be entered to use the CRBasic parameter ***SetValue***. If **.csipasswd** does exist, a correct user name and password will override the pass code.

8.6.3.14.2 Command Syntax

API commands follow the syntax,

```
ip_adr?command=CommandName&parameters/arguments
```

where,

ip_adr = the IP address of the CR800.
CommandName = the the API command.
parameters / arguments = the API command parameters and associated arguments.
& is used when appending parameters and arguments to the command string.

Some commands have optional parameters wherein omitting a parameter results in the use of a default argument. Some commands return a response code

indicating the result of the command. The following table lists API parameters and arguments and the commands wherein they are used. Parameters and arguments for specific commands are listed in the following sections.

Table 103. API Commands, Parameters, and Arguments

Parameter	*Commands in which the parameter is used*	*Function of parameter*	*Argument(s)*
uri	• **BrowseSymbols** • **DataQuery** • **ClockSet** • **ClockCheck** • **ListFiles**	Specifies the data source.	• ***source: dl*** (datalogger is data source): default, applies to all commands listed in column 2. • ***tablename.fieldname***: applies only to **BrowseSymbols**, and **DataQuery**
format	• **BrowseSymbols** • **DataQuery** • **ClockSet** • **ClockCheck** • **FileControl** • **ListFiles**	Specifies response format.	• ***html***, ***xml***, ***json***: apply to all commands listed in column 2. • ***toa5*** and ***tob1*** apply only to **DataQuery**
mode	**DataQuery**	Specifies range of data with which to respond.	• ***most-recent*** • ***since-time*** • ***since-record*** • ***data-range*** • ***backfill***
p1	**DataQuery**	• maximum number of records (when using ***most-recent*** argument). • beginning date and/or time (when using ***since-time*** ,or ***date-range*** arguments). • beginning record number (when using ***since-record*** argument). • interval in seconds (when using ***backfill*** argument).	• integer number of records (when using ***most-recent*** argument) • time in defined format (when using ***since-time*** ,or ***date-range*** arguments, see *Time Syntax* (p. 405) section) • integer record number(when using ***since-record*** argument). • integer number of seconds (when using ***backfill*** argument).
p2	**DataQuery**	Specifies ending date and/or time when using ***date-range*** argument.	time expressed in defined format (see *Time Syntax* (p. 405) section)

Table 103. API Commands, Parameters, and Arguments

Parameter	*Commands in which the parameter is used*	*Function of parameter*	*Argument(s)*
value	**SetValueEx**	Specifies the new value.	numeric or **string**
time	**ClockSet**	Specifies set time.	time in defined format
action	**FileControl**	Specifies **FileControl** action.	**1** through **20**
file	**FileControl**	Specifies first argument of **FileControl** action.	file name with drive
file2	**FileControl**	Specifies second argument parameter of **FileControl** action.	file name with drive
expr	**NewestFile**	Specifies path and wildcard expression for the desired set of files to collect.	path and wildcard expression

8.6.3.14.3 Time Syntax

API commands may have a time stamp parameter. Consult the *Clock Functions* (p. 552) section for more information. The format for the parameter is:

```
YYYY-MM-DDTHH:MM:SS.MS
```

where,

YYYY = four-digit year
MM = months into the year, one or two digits (1 to 12)
DD = days into the month, one or two digits (1 to 31)
HH = hours into the day, one or two digits (1 to 23)
MM = minutes into the hour, one or two digits (1 to 59)
SS = seconds into the minute, one or two digits (1 to 59)
MS = sub-second, optional when specifying time, up to nine digits (1 to <1E9)

The time parameters ***2010-07-27T12:00:00.00*** and ***2010-07-27T14:00:00*** are used in the following URL example:

```
http://192.168.4.14/?command=dataquery&uri=dl:WSN30sec.CWS900_Ts
&format=html&mode=date-range&p1=2010-07-27T12:00:00&p2=2010-07-
27T14:00:00
```

8.6.3.14.4 Data Management — BrowseSymbols Command

BrowseSymbols allows a web client to poll the host CR800 for its data memory structure. Memory structure is made up of table name(s), field name(s), and array sub-scripts. These together constitute "symbols." **BrowseSymbols** takes the form:

```
http://ip_address/?command=BrowseSymbols&uri=source:tablename.fi
eldname&format=html
```

BrowseSymbols requires a minimum **.csipasswd** access level of ***3*** (read-only).

Table 104. BrowseSymbols API Command Parameters	
`uri`	Optional. Specifies the *URI* (p. 506) for the data source. When querying a CR800, ***uri source***, ***tablename*** and **fieldname** are optional. If source is not specified, ***dl*** (CR800) is assumed. A field name is always specified in association with a table name. If the field name is not specified, all fields are output. If ***fieldname*** refers to an array without a subscript, all fields associated with that array will be output. Table name is optional. If table name is not used, the entire URI syntax is not needed.
`format`	Optional. Specifies the format of the response. The values **html**, **json**, and **xml** are valid. If this parameter is omitted, or if the value is **html**, empty, or invalid, the response is HTML.

Examples:

Command for a response wherein symbols for all tables are returned as HTML

```
http://192.168.24.106/?command=BrowseSymbols&uri=dl:public&fo
rmat=html
```

Command for a response wherein symbols for all fields in a single table (MainData) are returned as HTML

```
http://192.168.24.106/?command=BrowseSymbols&uri=dl:MainData&
format=html
```

Command for a response wherein symbols for a single field (Cond41) are returned as HTML

```
http://192.168.24.106/?command=BrowseSymbols&uri=dl:MainData.
Cond41&format=html
```

BrowseSymbols Response

The **BrowseSymbols *format*** parameter determines the format of the response. If a format is not specified, the format defaults to HTML. For more detail concerning data response formats, see the *Data File Formats* (p. 357) section.

The response consists of a set of child symbol descriptions. Each of these descriptions include the following fields:

Table 105. BrowseSymbols API Command Response	
`name`	Specifies the name of the symbol. This could be a data source name, a station name, a table name, or a column name.
`uri`	Specifies the uri of the child symbol.
`type`	Specifies a code for the type of this symbol. The symbol types include the following: **6** — Table **7** — Array **8** — Scalar
`is_enabled`	Boolean value that is set to true if the symbol is enabled for scheduled collection. This applies mostly to *LoggerNet* data sources.

`is_read_only`	Boolean value that is set to true if the symbol is considered to be read-only. A value of false would indicate an expectation that the symbol value can be changed using the **SetValueEx** command.
`can_expand`	Boolean value that is set to true if the symbol has child values that can be listed using the **BrowseSymbols** command.

If the client specifies the URI for a symbol that does not exist, the server will respond with an empty symbols set.

HTML Response

When ***html*** is entered in the **BrowseSymbols *format*** parameter, the response will be HTML. Following are example responses.

HTML tabular response:

BrowseSymbols Response

name	uri	type	is_enabled	is_read_only	can_expand
Status	dl:Status	6	true	false	true
MainData	dl:MainData	6	true	false	true
BallastTank1	dl:BallastTank1	6	true	false	true
BallastTank2	dl:BallastTank2	6	true	false	true
Public	dl:Public	6	true	false	true

HTML page source:

```
<!DOCTYPE HTML PUBLIC "-//IETF//DTD HTML//EN">
<html> <head>
<title>BrowseSymbols Response</title>
</head>

<body>
<h1>BrowseSymbols Response</h1>

<table border="1">
  <tr>

<th>name</th><th>uri</th><th>type</th><th>is_enabled</th><th>is_
read_only</th><th>can_expand</th></tr><tr>

<td>Status</td><td>dl:Status</td><td>6</td><td>true</td><td>fals
e</td><td>true</td></tr><tr>

<td>MainData</td><td>dl:MainData</td><td>6</td><td>true</td><td>
false</td><td>true</td></tr><tr>

<td>BallastTank1</td><td>dl:BallastTank1</td><td>6</td><td>true<
/td><td>false</td><td>true</td></tr><tr>

<td>BallastTank2</td><td>dl:BallastTank2</td><td>6</td><td>true<
/td><td>false</td><td>true</td></tr><tr>

<td>BallastTank3</td><td>dl:BallastTank3</td><td>6</td><td>true<
/td><td>false</td><td>true</td></tr><tr>

<td>BallastTank4</td><td>dl:BallastTank4</td><td>6</td><td>true<
/td><td>false</td><td>true</td></tr><tr>
```

```
<td>BallastLine</td><td>dl:BallastLine</td><td>6</td><td>true</t
d><td>false</td><td>true</td></tr><tr>

<td>Public</td><td>dl:Public</td><td>6</td><td>true</td><td>fals
e</td><td>true</td></tr>
</table>

</body> </html>
```

XML Response

When ***xml*** is entered in the **BrowseSymbols** ***format*** parameter, the response will be formated as *CSIXML* (p. 89) with a **BrowseSymbolsResponse** root element name. Following is an example response.

Example page source output:

```
<BrowseSymbolsResponse>
..<symbol
    name="Status"
    uri="dl:Status"
    type="6"
    is_enabled="true"
    is_read_only="false"
    can_expand="true"/><symbol
    name="MainData"
    uri="dl:MainData"
    type="6"
    is_enabled="true"
    is_read_only="false"
    can_expand="true"/><symbol
    name="BallastTank1"
    uri="dl:BallastTank1"
    type="6"
    is_enabled="true"
    is_read_only="false"
    can_expand="true"/><symbol
    name="BallastTank2"
    uri="dl:BallastTank2"
    type="6"
    is_enabled="true"
    is_read_only="false"
    can_expand="true"/><symbol
    name="BallastTank3"
    uri="dl:BallastTank3"
    type="6"
    is_enabled="true"
    is_read_only="false"
    can_expand="true"/><symbol
    name="BallastTank4"
    uri="dl:BallastTank4"
    type="6"
    is_enabled="true"
    is_read_only="false"
    can_expand="true"/><symbol
    name="BallastLine"
    uri="dl:BallastLine"
    type="6"
```

```
    is_enabled="true"
    is_read_only="false"
    can_expand="true"/><symbol
    name="Public"
    uri="dl:Public"
    type="6"
    is_enabled="true"
    is_read_only="false"
    can_expand="true"/>
</BrowseSymbolsResponse>
```

JSON Response

When ***json*** is entered in the **BrowseSymbols *format*** parameter, the response will be formated as *CSIJSON* (p. 89). Following is an example response.

```
{
 "symbols": [
  {"name": "Status","uri": "dl:Status","type": 6,"is_enabled":
true,"is_read_only": false,"can_expand": true},
  {"name": "MainData","uri": "dl:MainData","type":
6,"is_enabled": true,"is_read_only": false,"can_expand": true},
  {"name": "BallastTank1","uri": "dl:BallastTank1","type":
6,"is_enabled": true,"is_read_only": false,"can_expand": true},
  {"name": "BallastTank2","uri": "dl:BallastTank2","type":
6,"is_enabled": true,"is_read_only": false,"can_expand": true},
  {"name": "BallastTank3","uri": "dl:BallastTank3","type":
6,"is_enabled": true,"is_read_only": false,"can_expand": true},
  {"name": "BallastTank4","uri": "dl:BallastTank4","type":
6,"is_enabled": true,"is_read_only": false,"can_expand": true},
  {"name": "BallastLine","uri": "dl:BallastLine","type":
6,"is_enabled": true,"is_read_only": false,"can_expand": true},
  {"name": "Public","uri": "dl:Public","type": 6,"is_enabled":
true,"is_read_only": false,"can_expand": true}
 ]
}
```

8.6.3.14.5 Data Management — DataQuery Command

DataQuery allows a web client to poll the CR800 for data. **DataQuery** typically takes the form:

```
http://ip_address/?command=DataQuery&uri=dl:tablename.fieldname&
format=_&mode=_&p1=_&p2=_
```

DataQuery requires a minimum **.csipasswd** access level of **3** (read-only***)***.

Table 106. DataQuery API Command Parameters

`uri`	Optional. Specifies the *URI* *(p. 506)* for data to be queried. Syntax: ***dl:tablename.fieldname***. Field name is optional. Field name is always specified in association with a table name. If field name is not specified, all fields are collected. If ***fieldname*** refers to an array without a subscript, all values associated with that array will be output. Table name is optional. If table name is not used, the entire URI syntax is not needed as ***dl*** (CR800) is the default data source.
`mode`	Required. Modes for temporal-range of collected-data: ***most-recent*** returns data from the most recent number of records. ***p1*** specifies maximum number of records. ***since-time*** returns most recent data since a certain time. ***p1*** specifies the beginning time stamp (see *Time Syntax* *(p. 405)* section). ***since-record*** returns *records* *(p. 498)* since a certain record number. The record number is specified by ***p1.*** If the record number is not present in the table, the CR800 will return all data starting with the oldest record. ***date-range*** returns data in a certain date range. The date range is specified using ***p1*** and ***p2***. Data returned include data from date specified by ***p1*** but not by ***p2*** (half-open interval). ***backfill*** returns data stored since a certain time interval (for instance, all the data since 1 hour ago). The interval, in seconds, is specified using ***p1***.
`p1`	Optional. Specifies: • maximum number of records (***most-recent***) • beginning date and/or time (***since-time***, ***date-range***). See *Time Syntax* *(p. 405)* for format. • beginning record number (***since-record***) • interval in seconds (***backfill***)
`p2`	Optional. Specifies: • ending date and/or time (***date-range***). See *Time Syntax* *(p. 405)* for format.
`format`	Optional. Specifies the format of the output. If this parameter is omitted, or if the value is **html**, empty, or invalid, the output is HTML.

format ***Option***	***Data Output Format***	***Content-Type Field of HTTP Response Header***
html	HTML	***text/html***
xml	CSIXML	***text/xml***
json	CSIJSON	***application/json***
toa5	TOA5	***text/csv***
tob1	TOB1	***binary/octet-stream***

Note: When ***json*** is used, and the web server has a large data set to send, the web server may choose to break the data into multiple requests by specifying a value of ***true*** for the ***more*** flag in the CSIJSON output. The ***more*** flag is not shown if a complete data set is first returned.

Examples:

Command:

```
http://192.168.24.106/?command=DataQuery&uri=dl:MainData&mode=date-range&p1=2012-09-14T8:00:00&p2=2012-09-14T9:00:00
```

Response: collect all data from table MainData within the range of p1 to p2

Command:

```
http://192.168.24.106/?command=DataQuery&uri=dl:MainData.Cond41&
format=html&mode=most-recent&p1=70
```

Response: collect the five most recent records from table MainData

Command:

```
http://192.168.24.106/?command=DataQuery&uri=dl:MainData.Cond41&
format=html&mode=since-time&p1=2012-09-14T8:00:00
```

Response: collect all records of field Cond41 since the specified date and time

Command:

```
http://192.168.24.106/?command=DataQuery&uri=dl:MainData.Cond41&
format=html&mode=since-record&p1=4700
```

Response: collect all records since the specified record

Command:

```
http://192.168.24.106/?command=DataQuery&uri=dl:MainData.Cond41&
format=html&mode=backfill&p1=7200
```

Response: backfill all records since 3600 seconds ago

DataQuery Response

The **DataQuery *format*** parameter determines the format of the response. For more detail concerning data response formats, see the *Data File Formats* *(p. 357)* section.

When ***html*** is entered in the **DataQuery *format*** parameter, the response will be HTML. Following are example responses.

HTML Response

HTML tabular response:

Table Name: BallastLine

TimeStamp	Record	Induced_Water
2012-08-21 22:41:50.0	104	66
2012-08-21 22:42:00.0	105	66
2012-08-21 22:42:10.0	106	66
2012-08-21 22:42:20.0	107	66
2012-08-21 22:42:30.0	108	66

HTML page source:

```
<!DOCTYPE HTML PUBLIC "-//W3C//DTD HTML 4.01 Transitional//EN"
"http://www.w3.org/TR/html4/loose.dtd">
<HTML><HEAD><TITLE>Table Display</TITLE><meta http-
equiv="Pragma" content="no-cache"><meta http-equiv="expires"
content="0">
</HEAD><BODY>
<h1>Table Name: BallastLine</h1>
<table border="1" cellpadding="2" cellspacing="0">
<tr valign="middle" align="center">
```

```
<th nowrap>TimeStamp</th>
<th nowrap>Record</th>
<th nowrap>Induced_Water</th>
</tr>
<tr valign="middle" align="center">
<td nowrap>2012-08-21 22:41:50.0</td>
<td nowrap>104</td>
<td nowrap>66</td>
</tr>
<tr valign="middle" align="center">
<td nowrap>2012-08-21 22:42:00.0</td>
<td nowrap>105</td>
<td nowrap>66</td>
</tr>
<tr valign="middle" align="center">
<td nowrap>2012-08-21 22:42:10.0</td>
<td nowrap>106</td>
<td nowrap>66</td>
</tr>
<tr valign="middle" align="center">
<td nowrap>2012-08-21 22:42:20.0</td>
<td nowrap>107</td>
<td nowrap>66</td>
</tr>
<tr valign="middle" align="center">
<td nowrap>2012-08-21 22:42:30.0</td>
<td nowrap>108</td>
<td nowrap>66</td>
</tr>
</table>
</BODY></HTML>
```

XML Response

When ***xml*** is entered in the **DataQuery *format*** parameter, the response will be formatted as CSIXML. Following is an example response.

```
<?xml version="1.0" standalone="yes"?>
<csixml version="1.0">
<head>
<environment>
<station-name>Q2</station-name>
<table-name>BallastLine</table-name>
<model>CR1000</model>
<serial-no>18583</serial-no>
<os-version>CR1000.Std.25</os-version>
<dld-name>CPU:IndianaHarbor_081712.CR1</dld-name>
<dld-sig>33322</dld-sig>
</environment>
<fields>
<field name="Induced_Water" type="xsd:float" process="Smp"/>
</fields>
</head>
<data>
<r time="2012-08-21T22:41:50" no="104">
<v1>66</v1></r><r time="2012-08-21T22:42:00" no="105">
<v1>66</v1></r><r time="2012-08-21T22:42:10" no="106">
<v1>66</v1></r><r time="2012-08-21T22:42:20" no="107">
<v1>66</v1></r><r time="2012-08-21T22:42:30" no="108">
```

```
<v1>66</v1></r></data>
</csixml>
```

JSON Response

When ***json*** is entered in the **DataQuery *format*** parameter, the response will be formatted as CSIJSON. Following is an example response:

```
{
.."head": {
...."transaction": 0,
...."signature": 26426,
...."environment":  {
......"station_name":  "Q2",
......"table_name":  "BallastLine",
......"model":  "CR1000",
......"serial_no":  "18583",
......"os_version":  "CR1000.Std.25",
......"prog_name":  "CPU:IndianaHarbor_081712.CR1"
....},
...."fields":  [{
......"name":  "Induced_Water",
......"type":  "xsd:float",
......"process":  "Smp",
......"settable":  false}]
    },
......"data": [{
......"time":  "2012-08-21T22:41:50",
......"no":  104,
......"vals": [66]
    },{
......"time":  "2012-08-21T22:42:00",
......"no":  105,
......"vals": [66]
    },{
......"time":  "2012-08-21T22:42:10",
......"no":  106,
......"vals": [66]
    },{
......"time":  "2012-08-21T22:42:20",
......"no":  107,
......"vals": [66]
    },{
......"time":  "2012-08-21T22:42:30",
......"no":  108,
......"vals": [66]
}]}
```

TOA5 Response

When ***toa5*** is entered in the **DataQuery *format*** parameter, the response will be formated as Campbell Scientific TOA5. Following is an example response:

```
"TOA5","TXSoil","CR1000","No_SN","CR1000.Std.25","TexasRun_1b.CR
2","12645","_1Hr"
"TIMESTAMP","RECORD","ID","_6_inch","One","Two","Three","Temp_F_
Avg","Rain_in_Tot"
"TS","RN","","","","","","","","
"","","Smp","Smp","Smp","Smp","Smp","Avg","Tot"
"2012-05-03 17:00:00",0,0,-0.8949984,-0.95232,-0.8949984,-
0.8637322,2.144136,0.09999999
```

```
"2012-05-03 18:00:00",1,0,-0.9106316,-0.9731642,-0.9210536,-
0.8845763,72.56885,0
"2012-05-03 19:00:00",2,0,-0.9210536,-0.9679532,-0.9106316,-
0.8637322,72.297,0
"2012-05-03 20:00:00",3,0,-0.8624293,-0.9145398,-0.8624293,-
0.8311631,72.68445,0
"2012-05-03 21:00:00",4,0,-0.8949984,-0.9471089,-0.9002095,-
0.8585211,72.79237,0
"2012-05-03 22:00:00",5,0,-0.9262648,-0.9731642,-0.9158427,-
0.8793653,72.75194,0
"2012-05-03 23:00:00",6,0,-0.8103188,-0.8624293,-0.8103188,-
0.7686304,72.72644,0
"2012-05-04 00:00:00",7,0,-0.9158427,-0.9627421,-0.9158427,-
0.8689431,72.67271,0
"2012-05-04 01:00:00",8,0,-0.8598238,-0.9015122,-0.8598238,-
0.8129244,72.64571,0
"2012-05-04 02:00:00",9,0,-0.9158427,-0.9575311,-0.9054205,-
0.8689431,72.5931,0
"2012-05-04 03:00:00",10,0,-0.8754569,-0.9275675,-0.8910902,-
0.8546127,72.53336,0
"2012-05-04 04:00:00",11,0,-0.8949984,-0.9575311,-0.9106316,-
0.8793653,72.47779,0
"2012-05-04 05:00:00",12,0,-0.9236593,-0.9705587,-0.908026,-
0.8715487,72.4006,0
"2012-05-04 06:00:00",13,0,-0.9184482,-0.9601365,-0.902815,-
0.8819707,72.23279,0
"2012-05-05 11:00:00",0,5,-0.9106316,-0.941898,-0.8897874,-
0.8637322,4.740396,0
"2012-05-05 12:00:00",1,5,-0.9067233,-0.9640449,-0.9015122,-
0.8702459,71.16611,0
"2012-05-05 13:00:00",2,5,-0.8897874,-0.9366869,-0.8793653,-
0.8428879,70.93591,0
"2012-05-05 14:00:00",3,5,-0.9041178,-0.9510173,-0.8884846,-
0.8676404,70.78558,0
"2012-05-05 15:00:00",4,5,-0.9002095,-0.9627421,-0.9002095,-
0.8689431,70.66192,0
"2012-05-05 16:00:00",5,5,-0.9054205,-0.95232,-0.9054205,-
0.8741542,70.53237,0
"2012-05-05 17:00:00",6,5,-0.9158427,-0.9731642,-0.9002095,-
0.8637322,70.4076,0
"2012-05-05 18:00:00",7,5,-0.9223565,-0.969256,-0.9015122,-
0.8910902,70.33669,0
"2012-05-05 19:00:00",8,5,-0.8923929,-0.9445034,-0.8923929,-
0.8507045,70.25033,0
"2012-05-05 20:00:00",9,5,-0.9119344,-0.9640449,-0.9171454,-
0.8754569,70.1702,0
"2012-05-05 21:00:00",10,5,-0.930173,-0.9822836,-0.9197509,-
0.8832736,70.1116,0
"2012-05-05 22:00:00",11,5,-0.9132372,-0.9653476,-0.908026,-
0.8611265,70.0032,0
"2012-05-05 23:00:00",12,5,-0.9353842,-0.9822836,-0.930173,-
0.8936957,69.83805,0
```

TOB1 Response

When ***tob1*** is entered in the **DataQuery *format*** parameter, the response will be formated as Campbell Scientific TOB1. Following is an example response.

Example:

```
"TOB1","11467","CR1000","11467","CR1000.Std.20","CPU
:file format.CR1","61449","Test"
```

```
"SECONDS","NANOSECONDS","RECORD","battfivoltfiMin","
PTemp"
"SECONDS","NANOSECONDS","RN","","""
"","","","Min","Smp"
"ULONG","ULONG","ULONG","FP2","FP2"
376
}Ÿp' E1HŒŸp' E1H›Ÿp' E1HªŸp' E1H'Ÿp'
E1H
```

8.6.3.14.6 Control — SetValueEx Command

SetValueEx allows a web client to set a value in a host CR800 CRBasic variable.

```
http://ip_address/?command=SetValueEx&uri=dl:table.variable&valu
e=x.xx
```

SetValueEx requires a minimum **.csipasswd** access level of **2** (set variables allowed).

Table 107. SetValueEx API Command Parameters

`uri`	Specifies the variable that should be set in the following format: `dl:tablename.fieldname`
`value`	Specifies the value to set
`format`	The following table lists optional output formats for **SetValueEx** result codes. If not specified, result codes output as HTML. ***Result Code Output Option*** / ***Result Code Output Format*** / ***Content-Type Field of HTTP Response Header*** ***html*** / HTML / ***text/html*** ***json*** / CSIJSON / ***application/json*** ***xml*** / CSIXML / ***text/xml*** Example: ***&format=html*** Specifies the format of the response. The values **html**, **json**, and **xml** are valid. If this parameter is omitted, or if the value is **html**, empty, or invalid, the response is HTML.

Examples:

```
http://192.168.24.106/?command=SetValueEx&uri=dl:public.NaOH_Set
pt_Bal2&value=3.14
```

Response: the public variable settable_float is set to 3.14.

```
http://192.168.24.106/?command=SetValueEx&uri=dl:public.flag&val
ue=-1&format=html
```

Response: the public Boolean variable Flag(1) in is set to True (-1).

SetValueEx Response

The **SetValueEx** ***format*** parameter determines the format of the response. If a format is not specified, the format defaults to HTML For more detail concerning data response formats, see the *Data File Formats* (p. 357) section.

Responses contain two fields. In the XML output, the fields are attributes.

Table 108. SetValue API Command Response	
`outcome`	**0** — An unrecognized failure occurred **1** — Success **5** — Read only **6** — Invalid table name **7** — Invalid fieldname **8** — Invalid fieldname subscript **9** — Invalid field data type **10** — Datalogger communication failed **12** — Blocked by datalogger security **15** — Invalid web client authorization
`description`	A text description of the outcome code.

HTML Response

When ***html*** is entered in the **SetValueEx *format*** parameter, the response will be HTML Following are example responses.

HTML tabular response:

SetValueExResponse

outcome	outcome-code
description	description-text

HTML page source:

```
<!DOCTYPE HTML PUBLIC "-//IETF//DTD HTML//EN">
<html> <head>
<title>SetValueExResponse</title>
</head>

<body>
<h1>SetValueExResponse</h1>

<table border="1">
  <tr>
    <td>outcome</td>
    <td>outcome-code</td>
  </tr>
  <tr>
    <td>description</td>
    <td>description-text</td>
  </tr>
</table>


</body> </html>
```

XML Response

When ***xml*** is entered in the **SetValueEx *format*** parameter, the response will be CSIXML with a **SetValueExResponse** root element name. Following is an example response:

```
<SetValueExResponse outcome="outcome-code"
description="description-text"/>
```

JSON Response

When ***json*** is entered in the **SetValueEx *format*** parameter, the response will be CSIJSON. Following is an example response:

```
{
  "outcome": outcome-code,
  "description": description
}
```

8.6.3.14.7 Clock Functions — ClockSet Command

ClockSet allows a web client to set the CR800 real time clock. **ClockSet** takes the form:

```
http://ip_address/?command=ClockSet&format=html&time=YYYY-MM-
DDTHH:MM:SS.MS
```

ClockSet requires a minimum **.csipasswd** access level of **1** (all access allowed)**.**

Table 109. ClockSet API Command Parameters	
`uri`	If this parameter is excluded, or if it is set to "datalogger" (**uri=dl**) or an empty string (**uri=**), the command is sent to the CR800 web server.[1]
`format`	Specifies the format of the response. The values **html**, **json**, and **xml** are valid. If this parameter is omitted, or if the value is **html**, empty, or invalid, the response is HTML.
`time`	Specifies the time to which the CR800 real-time clock is set. This value must conform to the format described for input time stamps in the *Time Syntax* (p. 405) section.
[1] optionally specifies the URI for the *LoggerNet* source station to be set	

Example:

```
http://192.168.24.106/?command=ClockSet&format=html&time=2012-9-
14T15:30:00.000
```

Response: sets the host CR800 real time clock to 3:30 PM 14 September 2012.

ClockSet Response

The **ClockSet *format*** parameter determines the format of the response. If a format is not specified, the format defaults to HTML. For more detail concerning data response formats, see the *Data File Formats* (p. 357) section.

Responses contain three fields as described in the following table:

Table 110. ClockSet API Command Response	
`outcome`	**1** — The clock was set **5** — Communication with the CR800 failed **6** — Communication with the CR800 is disabled **8** — An invalid URI was specified.
`time`	Specifies the value of the CR800 clock before it was changed.
`description`	A string that describes the outcome code.

HTML Response

When ***html*** is entered in the **ClockSet *format*** parameter, the response will be HTML. Following are example responses.

HTML tabular response:

ClockSet Response

outcome	1
time	2011-12-01 11:42:02.75
description	The clock was set

HTML page source:

```
<!DOCTYPE HTML PUBLIC "-//W3C//DTD HTML 4.01 Transitional//EN"
"http://www.w3.org/TR/html4/loose.dtd">
<!DOCTYPE HTML PUBLIC "-//IETF//DTD HTML//EN"><html>
<head><title>ClockSet Response</title></head>
<body>
<h1>ClockSet Response</h1>
<table border="1">
<tr><td>outcome</td><td>1</td>
</tr><td>time</td>
<td>2011-12-01 11:42:02.75</td>
</tr><tr><td>description</td><td>The clock was set</td></tr>
</table> </body> </html>
```

XML Response

When ***xml*** is entered in the **ClockSet *format*** parameter, the response will be formated as *CSIXML* (p. 89) with a **ClockSetResponse** root element name. Following is an example response.

```
<ClockSetResponse outcome="1" time="2011-12-01T11:41:21.17"
description="The clock was set"/>
```

JSON Response

When ***json*** is entered in the **ClockSet *format*** parameter, the response will be formated as *CSIJSON* (p. 89). Following is an example response.

```
{"outcome": 1,"time": "2011-12-01T11:40:32.61","description": "
The clock was set"}
```

8.6.3.14.8 Clock Functions — ClockCheck Command

ClockCheck allows a web client to read the real-time clock from the host CR800. **DataQuery** takes the form:

```
http://ip_address/?command=ClockCheck&format=html
```

ClockCheck requires a minimum **.csipasswd** access level of **3** (read-only***)***.

Table 111. ClockCheck API Command Parameters	
`uri`	If this parameter is excluded, or if it is set to "datalogger" (**uri=dl**) or an empty string (**uri=**), the host CR800 real-time clock is returned.[1]
`format`	Specifies the format of the response. The values **html**, **json**, and **xml** are recognized. If this parmeter is omitted, or if the value is **html**, empty, or invalid, the response is HTML.
[1] optionally specifies the URI for a *LoggerNet* source station to be checked	

Example:

```
http://192.168.24.106/?command=ClockCheck&format=html
```

Response: checks the host CR800 real time clock and requests the response be an HTML table.

ClockCheck Response

The **ClockCheck** ***format*** parameter determines the format of the response. If a format is not specified, the format defaults to HTML. For more detail concerning data response formats, see the *Data File Formats* *(p. 357)* section.

Responses contain three fields as described in the following table:

Table 112. ClockCheck API Command Response	
`outcome`	Codes that specifies the outcome of the **ClockCheck** command. Codes in grey text are not valid inputs for the CR800: **1** — The clock was checked **2** — The clock was set[1] **3** — The *LoggerNet* session failed **4** — Invalid *LoggerNet* logon **5** — Blocked by *LoggerNet* security **6** — Communication with the specified station failed **7** — Communication with the specified station is disabled **8** — Blocked by datalogger security **9** — Invalid LoggerNet station name **10** — The *LoggerNet* device is busy **11** — The URI specified does not reference a *LoggerNet* station.
`time`	Specifies the current value of the CR800 real-time clock[2]. This value will only be valid if the value of outcome is set to **1**. This value will be formatted in the same way that record time stamps are formatted for the **DataQuery** response.
`description`	A text string that describes the outcome.

[1] *LoggerNet* may combine a new clock check transaction with pending *LoggerNet* clock set transactions
[2] or *LoggerNet* server

HTML Response

When ***html*** is entered in the **ClockCheck *format*** parameter, the response will be HTML. Following are example responses.

HTML tabular response:

ClockCheck Response

outcome	1
time	2012-08-24 15:44:43.59
description	The clock was checked

HTML page source:

```
<!DOCTYPE HTML PUBLIC "-//W3C//DTD HTML 4.01 Transitional//EN"
"http://www.w3.org/TR/html4/loose.dtd">
<!DOCTYPE HTML PUBLIC "-//IETF//DTD HTML//EN"><html>
<head><title>ClockCheck Response</title></head>
<body>
<h1>ClockCheck Response</h1>
<table border="1">
<tr><td>outcome</td><td>1</td>
</tr><td>time</td>
<td>2012-08-24 15:44:43.59</td>
</tr><tr><td>description</td><td>The clock was checked</td></tr>
</table> </body> </html>
```

XML Response

When ***xml*** is entered in the **ClockCheck *format*** parameter, the response will be formated as *CSIXML* (p. 89) with a **ClockCheckResponse** root element name. Following is an example response.

```
<ClockCheckResponse outcome="1" time="2012-08-24T15:50:50.59"
description="The clock was checked"/>
```

JSON Response

When ***json*** is entered in the **ClockCheck *format*** parameter, the response will be formated as *CSIJSON* (p. 89). Following is an example response.

Example:

```
{
  "outcome": 1,
  "time": "2012-08-24T15:52:26.22",
  "description": "  The clock was checked"
}
```

8.6.3.14.9 File Management — Sending a File to a Datalogger

A file can be sent to the CR800 using an **HTTPPut** request. Sending a file requires a minimum **.csipasswd** access level of **1** (all access allowed). Unlike other web API commands, originating a PUT request from a browser address bar

is not possible. Instead, use JavaScript within a web page or use the program *Curl.exe*. *Curl.exe* is available in the *LoggerNet RTMC* program files folder or at http://curl.haxx.se. The *Curl.exe* command line takes the following form (command line parameters are described in the accompanying table):

```
curl -XPUT -v -S -T "filename.ext" --user username:password
http://IPAdr/drive/
```

Table 113. Curl HTTPPut Request Parameters

Parameter	*Description*
`-XPUT`	Instructs *Curl.exe* to use the **HTTPPut** command
`-v`	Instructs *Curl.exe* to print all output to the screen
`-S`	Instructs *Curl.exe* to show errors
`-T "filename.ext"`	name of file to send to CR800 (enclose in quotes)
`username`	user name in the .csipasswrd file
`password`	password in the .csipasswrd file
`IPAdr`	IP address of the CR800
`drive`	memory drive of the CR800

Examples:

To load an operating system to the CR800, open a command prompt window ("DOS window") and execute the following command, as a continuous line:

```
curl -XPUT -v -S -T
"c:\campbellsci\lib\OperatingSystems\CR1000.Std.25.obj" --user
harrisonford:lostark1 http://192.168.24.106/cpu/
```

Response:

```
* About to connect() to 192.168.7.126 port 80 (#0)
*   Trying 192.168.7.126... connected
* Connected to 192.168.7.126 (192.168.7.126) port 80 (#0)
* Server auth using Basic with user 'fredtest'
>PUT /cpu/myron%22Ecr1 HTTP/1.1
>Authorization: Basic ZGF2ZW1lZWs6d29vZnk5NTU1
>User-Agent: curl/7.21.1 (i386-pc-win32) libcurl/7.21.1
OpenSSL/0.9.8o zlib/1.2.5 libidn/1.18 libssh2/1.2.6
>Host: 192.168.7.126
>Accept:*/*
>Content-Length: 301
>Expect: 100-continue
>
*Done waiting for 100-continue
<HTTP/1.1 200 OK
<Date: Fri, 2 Dec 2011 05:31:50
<Server: CR1000.Std.25
<Content-Length: 0
<
* Connection #0 to host 192.168.7.126 left intact
* Closing connection #0
```

When a file with extension .OBJ is uploaded to the CR800 CPU: drive, the CR800 sees the file as a new operating system (OS) and does not actually upload it to CPU:. Rather, it captures it. When capture is complete, the CR800 reboots

and compiles the new OS in the same manner as if it was sent via a *datalogger support software* (p. 93) **Connect** screen.

Other files sent to a CR800 drive work just as they would in *datalogger support software* (p. 93) **File Control**. The exception is that CRBasic program run settings cannot be set. To get a program file to run, use the web API **FileControl** command. Curl.exe can be used to perform both operations, as the following demonstrates:

Upload the program to the CR800 CPU: drive (must have **/cpu/** on end of the URL):

```
curl -XPUT -v -S -T "program.CR1" --user username:password
"http://192.168.24.106/cpu/"
```

Compile and run the program and mark it as the program to be run on power up. **-XGET** is not needed as it is the default command for Curl.exe.

```
curl -v -S --user username:password
"http://192.168.24.106/?command=FileControl&file=CPU:program.CR1
&action=1"
```

Both operations can be combined in a batch file.

8.6.3.14.10 File Management — FileControl Command

FileControl allows a web client to perform file system operations on a host CR800. **FileControl** takes the form:

```
http://ip_address/?command=FileControl&file=drive:filename.dat&a
ction=x
```

FileControl requires a minimum **.csipasswd** access level of **1** (all access allowed).

Table 114. FileControl API Command Parameters	
`action`	**1** — Compile and run the file specified by ***file*** and mark it as the program to be run on power up. **2** — Mark the file specified by ***file*** as the program to be run on power up. **3** — Mark the file specified by ***file*** as hidden. **4** — Delete the file specified by ***file***. **5** — Format the device specified by ***file***. **6** — Compile and run the file specified by ***file*** without deleting existing data tables. **7** — Stop the currently running program. **8** — Stop the currently running program and delete associated data tables. **9** — Perform a full memory reset. **10** — Compile and run the program specified by ***file*** but do not change the program currently marked to run on power up. **11** — Pause execution of the currently running program. **12** — Resume execution of the currently paused program. **13** — Stop the currently running program, delete its associated data tables, run the program specified by ***file***, and mark the same file as the program to be run on power up. **14** — Stop the currently running program, delete its associated data tables, and run the program specified by ***file*** without affecting the program to be run on power up. **15** — Move the file specified by ***file2*** to the name specified by file. **16** — Move the file specified by ***file2*** to the name specified by ***file***, stop the currently running program, delete its associated data tables, and run the program specified by ***file2*** while marking it to run on power up. **17** — Move the file specified by ***file2*** to the name specified by ***file***, stop the currently running program, delete its associated data tables, and run the program specified by ***file2*** without affecting the program that will run on power up. **18** — Copy the file specified by ***file2*** to the name specified by ***file***. **19** — Copy the file specified by ***file2*** to the name specified by ***file***, stop the currently running program, delete its associated data tables, and run the program specified by ***file2*** while marking it to run on power up. **20** — Copy the file specified by ***file2*** to the name specified by ***file***, stop the currently running program, delete its associated data tables, and run the program specified by ***file2*** without affecting the program that will run on power up.
`file`	Specifies the first parameter for the file control operation. This parameter must be specified for ***action*** values ***1, 2, 3, 4, 5, 6, 10, 13, 14, 15, 16, 17, 18, 19,*** and ***20***.
`file2`	Specifies the second parameter for the file control operation. This parameter must be specified for ***action*** values ***15, 16, 17, 18, 19,*** and ***20***.
`format`	Specifies the format of the response. The values **html**, **json**, and **xml** are recognized. If this parameter is omitted, or if the value is **html**, empty, or invalid, the response is HTML.

Example:

```
http://192.168.24.106/?command=FileControl&file=USR:APITest.dat&
action=4
```

Response: APITest.dat is deleted from the CR800 USR: drive.

```
http://192.168.24.106/?command=FileControl&file=CPU:IndianaJones
_090712_2.CR1&action=1
```

Response: Set program file to Run Now.

```
http://192.168.24.106/?command=FileControl&file=USR:FileCopy.dat
&file2=USR:FileName.dat&action=18
```

Response: Copy from file2 to file.

FileControl Response

All output formats contain the following parameters. Any ***action*** (for example, **9**) that performs a reset, the response is returned before the effects of the command are complete.

Table 115. FileControl API Command Response	
`outcome`	A response of zero indicates success. Non-zero indicates failure.
`holdoff`	Specifies the number of seconds that the web client should wait before attempting more communication with the station. A value of zero will indicate that communication can resume immediately. This parameter is needed because many of the commands will cause the CR800 to perform a reset. In the case of sending an operating system, it can take tens of seconds for the datalogger to copy the image from memory into flash and to perform the checking required for loading a new operating system. While this reset is under way, the CR800 will be unresponsive.
`description`	Detail concerning the outcome code.

Example:

```
192.168.24.106/?command=FileControl&action=4&file=cpu:davetest.c
r1
```

Response: delete the file davetest.cr1 from the host CR800 CPU: drive.

When ***html*** is entered in the **FileControl** ***format*** parameter, the response will be HTML. Following is an example response.

FileControl Response

outcome	0
holdoff	0
description	File deleted

8.6.3.14.11 File Management — ListFiles Command

ListFiles allows a web client to obtain a listing of directories and files in the host CR800. **ListFiles** takes the form:

```
http://ip_address/drive/?command=ListFiles
```

ListFiles requires a minimum **.csipasswd** access level of **3** (read only).

Table 116. ListFiles API Command Parameters	
`format`	Specifies the format of the response. The values **html**, **json**, and **xml** are valid. If this parameter is omitted, or if the value is **html**, empty, or invalid, the response is HTML.
`uri`	If this parameter is excluded, or if it is set to "datalogger" (**uri=dl**) or an empty string (**uri=**), the file system will be sent from the host CR800.[1]
[1] Optionally specifies the URI to a *LoggerNet* datalogger station from which the file list will be retrieved.	

Examples:

`http://192.168.24.106/?command=ListFiles`

Response: returns the drive structure of the host CR800 (CPU:, USR:, CRD:, and USB:).

`http://192.168.24.106/CPU/?command=ListFiles`

Response: lists the files on the host CR800 CPU: drive.

ListFiles Response

The format of the response depends on the value of the ***format*** parameter in the command request. The response provides information for each of the files or directories that can be reached through the CR800 web server. The information for each file includes the following:

Table 117. ListFiles API Command Response

`path`	Specifies the path to the file relative to the URL path.
`is_dir`	A boolean value that will identify that the object is a directory if set to true.
`size`	An integer that gives the size of for a file in bytes (the value of is_dir is false) or the bytes free for a directory.
`last_write`	A string associated only with files that specifies the date and time that the file was last written.
`run_now`	A boolean attribute applied by the CR800 for program files that are marked as currently executing.
`run_on_power_up`	A boolean attribute applied by the CR800 for program files that are marked to run when the CR800 powers up or resets.
`read_only`	A boolean attribute applied by the CR800 for a file that is marked as read-only.
`paused`	A boolean attribute applied by the CR800 that is marked to run but the program is now paused.

HTML Response

When ***html*** is entered in the **ListFiles *format*** parameter, the response will be HTML. Following are example responses.

HTML tabular response:

ListFiles Response

Path	Is Directory	Size	Last Write	Run Now	Run On Power Up	Read Only	Paused
CPU/	true	443904	2012-06-22T00:00:00	false	false	false	false
CPU/ModbusMasterTCPExample.CR1	false	967	2012-07-10T18:21:44	false	false	false	false
CPU/CS475-Test.CR1	false	828	2012-07-16T14:16:50	false	false	false	false
CPU/DoubleModbusSlaveTCP.CR1	false	1174	2012-07-31T17:18:00	false	false	false	false
CPU/untitled.CR1	false	1097	2012-08-07T10:48:20	false	false	false	false

HTML page source:

```
<!DOCTYPE HTML PUBLIC "-//W3C//DTD HTML 4.01 Transitional//EN"
"http://www.w3.org/TR/html4/loose.dtd">
```

```
<!DOCTYPE HTML PUBLIC "-//IETF//DTD HTML//EN"><html>
<head><title>ListFiles Response</title></head>
<body><h1>ListFiles Response</h1><table border="1">
<tr><td><b>Path</b></td>
<td><b>Is Directory</b></td>
<td><b>Size</b></td>
<td><b>Last Write</b></td>
<td><b>Run Now</b></td>
<td><b>Run On Power Up</b></td>
<td><b>Read Only</b></td>
<td><b>Paused</b></td></tr><tr>
<td>CPU/</td>
<td>true</td>
<td>443904</td>
<td>2012-06-22T00:00:00</td>
<td>false</td>
<td>false</td>
<td>false</td>
<td>false</td></tr><tr>
<td>CPU/ModbusMasterTCPExample.CR1</td>
<td>false</td>
<td>967</td>
<td>2012-07-10T18:21:44</td>
<td>false</td>
<td>false</td>
<td>false</td>
<td>false</td></tr><tr>
<td>CPU/CS475-Test.CR1</td>
<td>false</td>
<td>828</td><td>2012-07-16T14:16:50</td>
<td>false</td>
<td>false</td>
<td>false</td>
<td>false</td></tr><tr>
<td>CPU/DoubleModbusSlaveTCP.CR1</td>
<td>false</td>
<td>1174</td>
<td>2012-07-31T17:18:00</td>
<td>false</td>
<td>false</td>
<td>false</td>
<td>false</td></tr><tr>
<td>CPU/untitled.CR1</td>
<td>false</td>
<td>1097</td>
<td>2012-08-07T10:48:20</td>
<td>false</td>
<td>false</td>
<td>false</td>
<td>false</td></tr><tr>
</table>
```

Page source template:

```
<!DOCTYPE HTML PUBLIC "-//IETF//DTD HTML//EN">
<html> <head>
<title>ListFiles Response</title>
</head>
<body>
```

```
<h1>ListFiles Response</h1>
<table border="1">
  <tr>
    <td><b>Path</b></td>
    <td><b>Is Directory</b></td>
    <td><b>Size</b></td>
    <td><b>Last Write</b></td>
    <td><b>Run Now</b></td>
    <td><b>Run On Power Up</b></td>
    <td><b>Read Only</b></td>
    <td><b>Paused</b></td>
  </tr>
  <tr>
    <td>CPU:</td>
    <td>true</td>
    <td>50000</td>
    <td>YYYY-mm-dd hh:mm:ss.xxx</td>
    <td>false</td>
    <td>false</td>
    <td>false</td>
    <td>false</td>
  </tr>
  <tr>
    <td>CPU:lights-web.cr1</td>
    <td>false</td>
    <td>16994</td>
    <td>YYYY-mm-dd hh:mm:ss.xxx</td>
    <td>true</td>
    <td>true</td>
    <td>false</td>
    <td>false</td>
  </tr>
</table>
```

XML Response

When ***xml*** is entered in the **ListFiles *format*** parameter, the response will be formated as *CSIXML* (p. 89) with a **ListFilesResponse** root element name. Following is an example response.

```
<ListFilesResponse>
  <file
    is_dir="true"
    path="CPU:"
    size="50000"
    last_write="yyyy-mm-ddThh:mm:ss.xxx"
    run_now="false"
    run_on_power_up="false"
    read_only="false"
    paused="false" />
  <file
    is_dir="false"
    path="CPU:lights-web.cr1"
    last_write="yyyy-mm-ddThh:mm:ss.xxx"
    size="16994"
    run_now="true"
    run_on_power_up="true"
    read_only="false"
    paused="false"/>
</ListFilesResponse>
```

JSON Response

When ***json*** is entered in the **ListFiles** ***format*** parameter, the response will be formated as *CSIJSON* (p. 89). Following is an example response.

```
{
  "files": [
    {
      "path": "CPU:",
      "is_dir": true,
      "size": 50000,
      "last_write": "yyyy-mm-ddThh:mm:ss.xxx",
      "run_now": false,
      "run_on_power_up": false,
      "read_only": false,
      "paused": false
    },
    {
      "path": "CPU:lights-web.cr1",
      "is_dir": false,
      "size": 16994,
      "last_write": "yyyy-mm-ddThh:mm:ss.xxx",
      "run_now": true,
      "run_on_power_up": true,
      "read_only": false,
      "paused": false
    },
  ]
}
```

8.6.3.14.12 File Management — NewestFile Command

NewestFile allows a web client to request a file, such as a program or image, from the host CR800. If a wildcard (*) is included in the expression, the most recent in a set of files whose names match the expression is returned. For instance, a web page may be designed to show the newest image taken by a camera attached to the CR800. **NewestFile** takes the form:

```
http://192.168.13.154/?command=NewestFile&expr=drive:filename.ex
t
```

Where **filename** can be a wildcard (*).

NewestFile requires a minimum **.csipasswd** access level of **3** (read only) for all files except program files. Program files require access level **1** (all access allowed).

Table 118. NewestFile API Command Parameters	
`expr`	Specifies the complete path and wildcard expression for the desired set of files[1]. ***expr=USR:*.jpg*** selects the newest of the collection of files on the USR: drive that have a .jpg extension.
[1] The PC based web server will restrict the paths on the host computer to those that are allowed in the applicable site configuration file (.sources.xml). This is done to prevent web access to all file systems accessible to the host computer.	

Example:

```
http://192.168.24.106/?command=NewestFile&expr=USR:*.jpg
```

Response: the web server collects the newest JPG file on the USR: drive of the host CR800

Note to retrieve any file, regardless of age, the url is http://ip_address/drive/filename.ext. The name of the desired file is determined using the **ListFiles** command.

NewestFile Response

The web server will transmit the contents of the newest file that matches the expression given in ***expr***. If there are no matching files, the server responds with a **404 Not Found** HTTP response code.

8.7 Datalogger Support Software — Details

Reading List:
- *Datalogger Support Software — Quickstart* (p. 46)
- *Datalogger Support Software — Overview* (p. 93)
- *Datalogger Support Software — Details* (p. 429)
- *Datalogger Support Software — Lists* (p. 630)

Datalogger support software facilitates program generation, editing, data retrieval, and real-time data monitoring.

- *PC200W Starter Software* is available at no charge at *www.campbellsci.com/downloads* (*http://www.campbellsci.com/downloads*). It supports a transparent RS-232 connection between PC and CR800, and includes *Short Cut* for creating CR800 programs. Tools for setting the datalogger clock, sending programs, monitoring sensors, and on-site viewing and collection of data are also included.
- *LoggerLink Mobile Apps* are simple yet powerful tools that allow an iOS or Android device to communicate with IP-enabled CR800s. The apps support field maintenance tasks such as viewing and collecting data, setting the clock, and downloading programs.
- *PC400 Datalogger Support Software* supports a variety of telecommunication options, manual data collection, and data monitoring displays. *Short Cut* and *CRBasic Editor* are included for creating CR800 programs. *PC400* does not support complex communication options, such as phone-to-RF, PakBus® routing, or scheduled data collection.
- *LoggerNet Datalogger Support Software* supports combined telecommunication options, customized data-monitoring displays, and scheduled data collection. It includes *Short Cut* and *CRBasic Editor* for creating CR800 programs. It also includes tools for configuring, trouble-shooting, and managing datalogger networks. *LoggerNet Admin* and *LoggerNet Remote* are available for more demanding applications.
- *LNLINUX Linux-based LoggerNet Server* with *LoggerNet Remote* provides a solution for those who want to run the *LoggerNet* server in a Linux environment. The package includes a Linux version of the *LoggerNet* server and a Windows version of *LoggerNet Remote*. The Windows-based client applications in *LoggerNet Remote* are run on a separate computer, and are used to manage the *LoggerNet* Linux server.
- *VISUALWEATHER Weather Station Software* supports Campbell Scientific weather stations. Version 3.0 or higher supports custom weather stations or

the ET107, ET106, and MetData1 pre-configured weather stations. The software allows you to initialize the setup, interrogate the station, display data, and generate reports from one or more weather stations.

Note More information about software available from Campbell Scientific can be found at *www.campbellsci.com http://www.campbellsci.com*. Please consult with a Campbell Scientific application engineer for a software recommendation to fit a specific application.

8.8 Keyboard Display — Details

Related Topics:
- *Keyboard Display — Overview* (p. 82)
- *Keyboard Display — Details* (p. 430)
- *Keyboard Display — List* (p. 627)
- *Custom Menus — Overview* (p. 83, p. 555)

Read More See *Custom Menus* (p. 180).

A keyboard is available for use with the CR800. See the appendix *Keyboard Displays* (p. 627) for information on available keyboard displays. The CR850 has an integrated keyboard display. This section illustrates the use of the keyboard display using default menus. Some keys have special functions as outlined below.

Note Although the keyboard display is not required to operate the CR800, it is a useful diagnostic and debugging tool.

Table 119. Special Keyboard-Display Key Functions

Key	*Special Function*
[2] and **[8]**	Navigate up and down through the menu list one line at a time
[Enter]	Selects the line or toggles the option of the line the cursor is on
[Esc]	Back up one level in the menu
[Home]	Move cursor to top of the list
[End]	Move cursor to bottom of the list
[Pg Up]	Move cursor up one screen
[Pg Dn]	Move cursor down one screen
[BkSpc]	Delete character to the left
[Shift]	Change alpha character selected
[Num Lock]	Change to numeric entry
[Del]	Delete
[Ins]	Insert/change graph setup
[Graph]	Graph

Figure 110. Using the Keyboard / Display

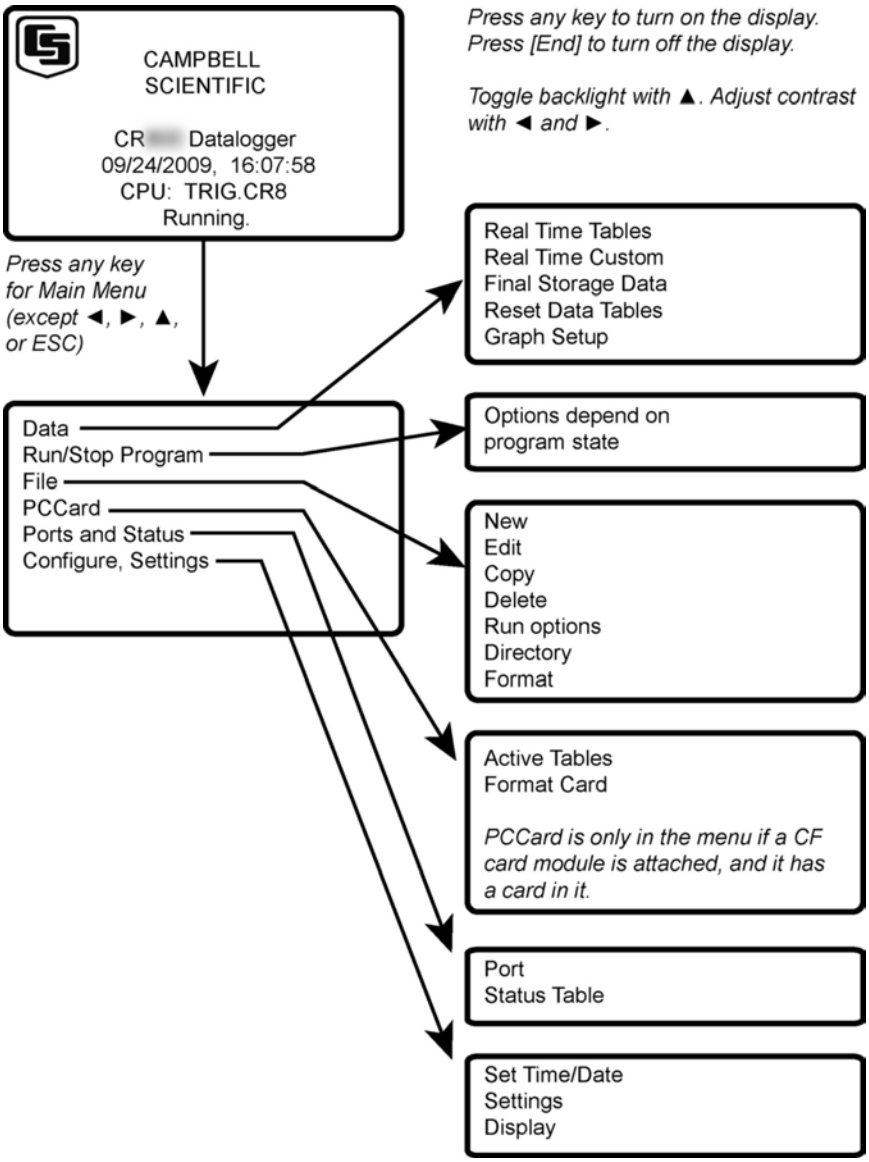

8.8.1 Data Display

Figure 111. Displaying Data with the Keyboard / Display

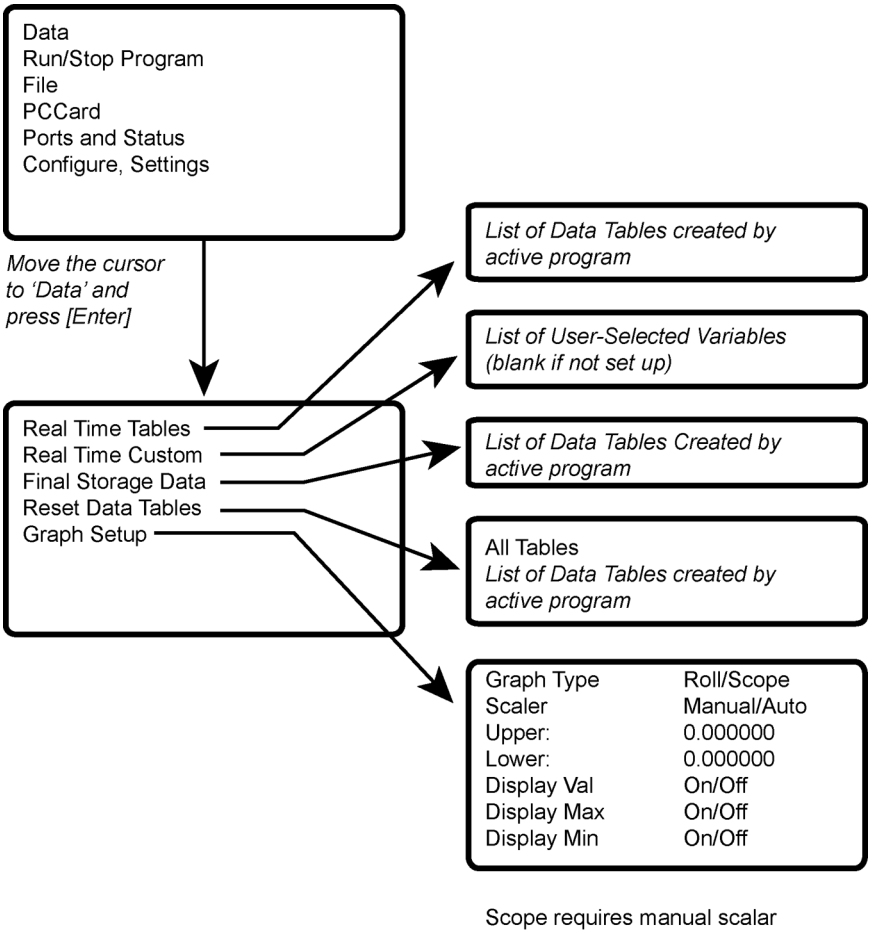

8.8.1.1 Real-Time Tables and Graphs

Figure 112. Real-Time Tables and Graphs

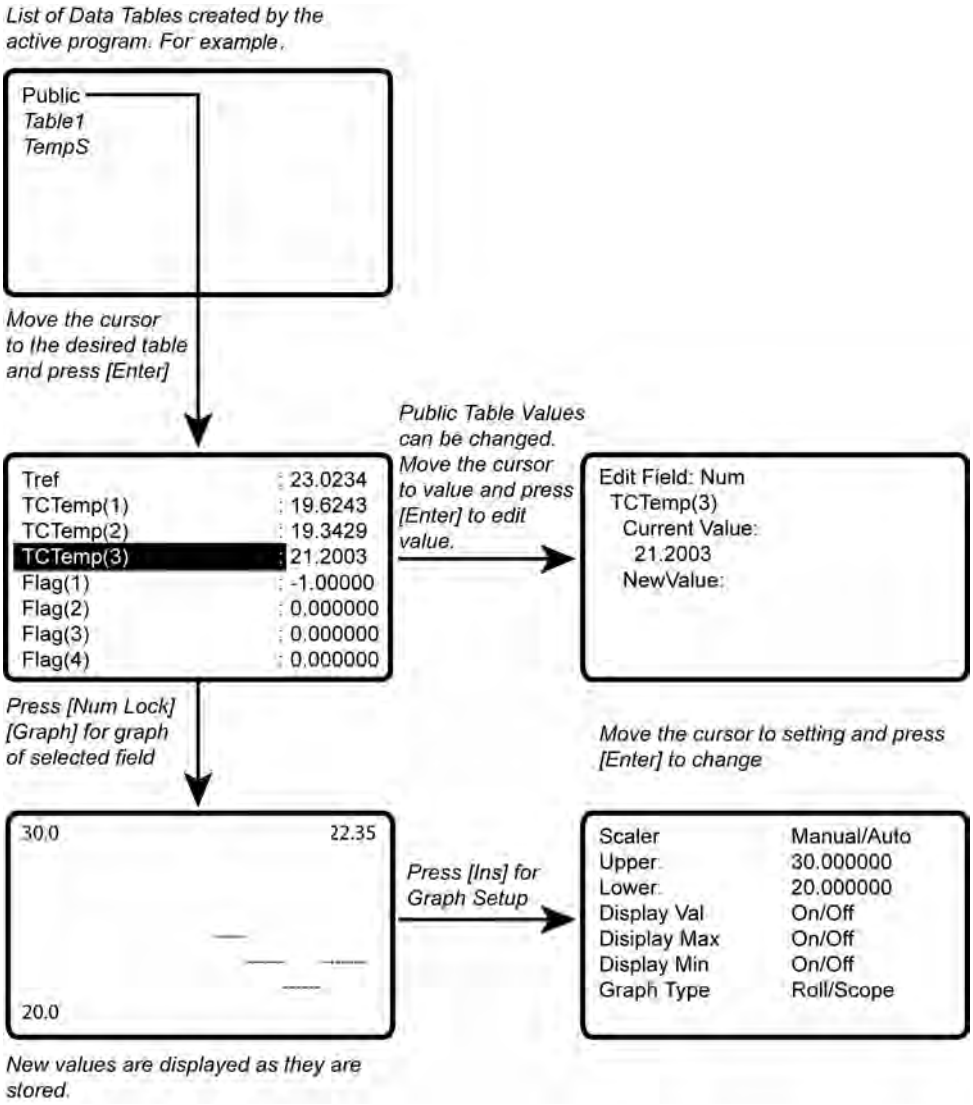

8.8.1.2 Real-Time Custom

The CR1000KD Keyboard Display can be configured with a customized real-time display. The CR800 will keep the setup as long as the defining program is running.

Read More Custom menus can also be programmed. See *Custom Menus* *(p. 180)* for more information.

Figure 113. Real-Time Custom

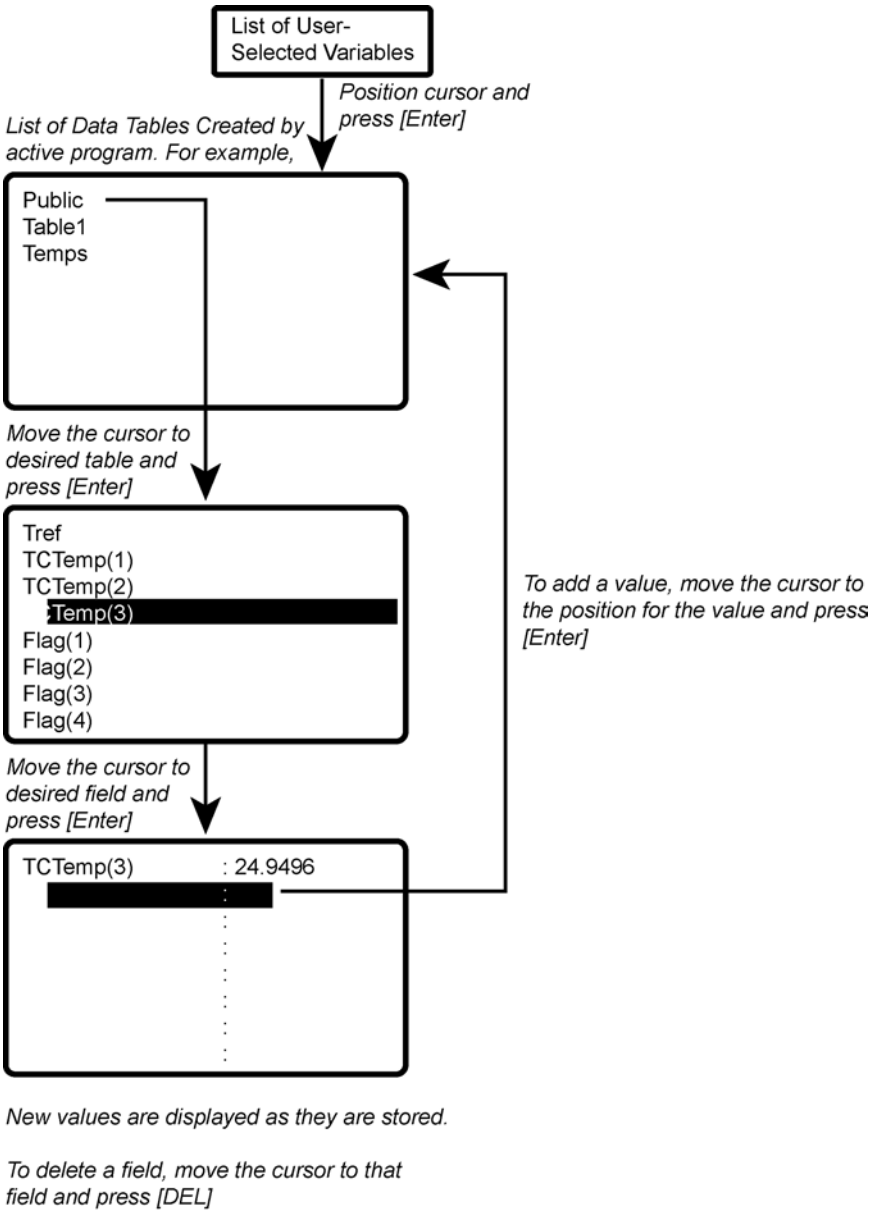

8.8.1.3 Final-Memory Tables

Figure 114. Final-Memory Tables

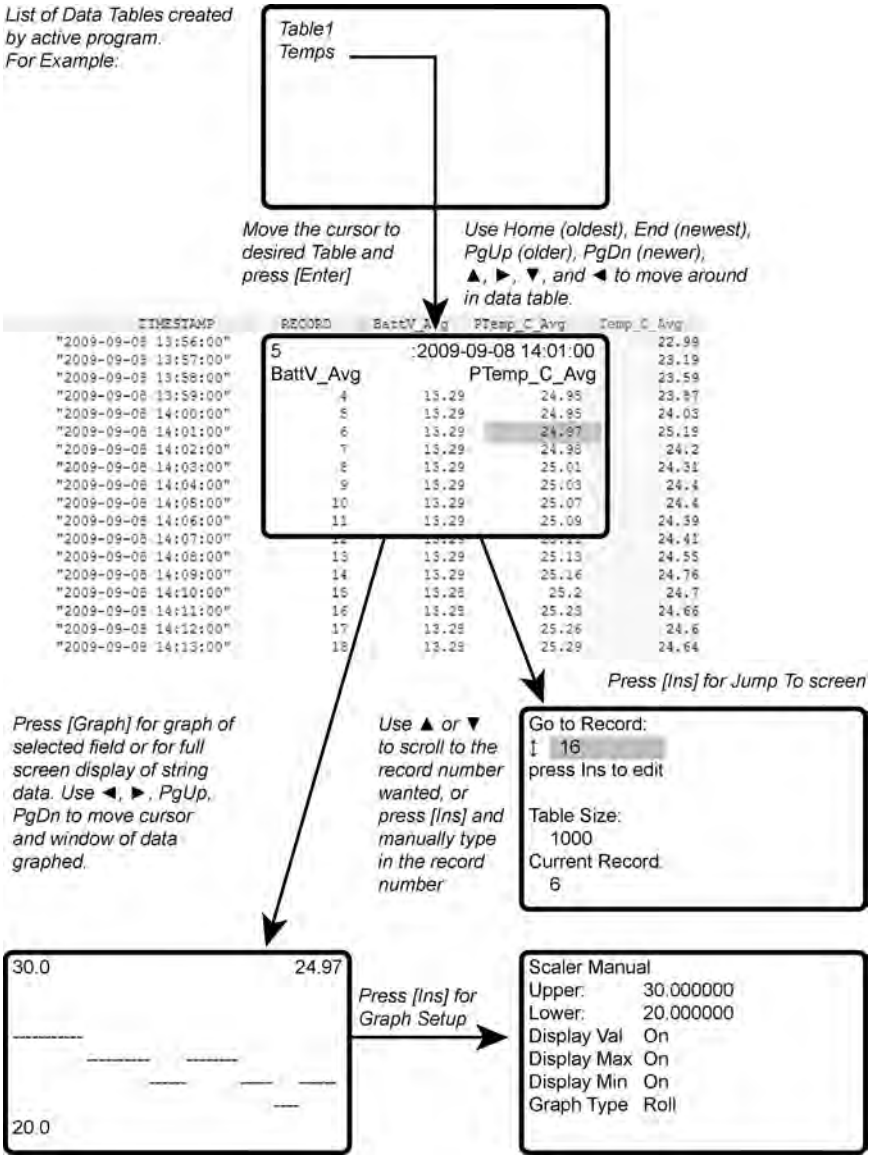

8.8.2 Run/Stop Program

Figure 115. Run/Stop Program

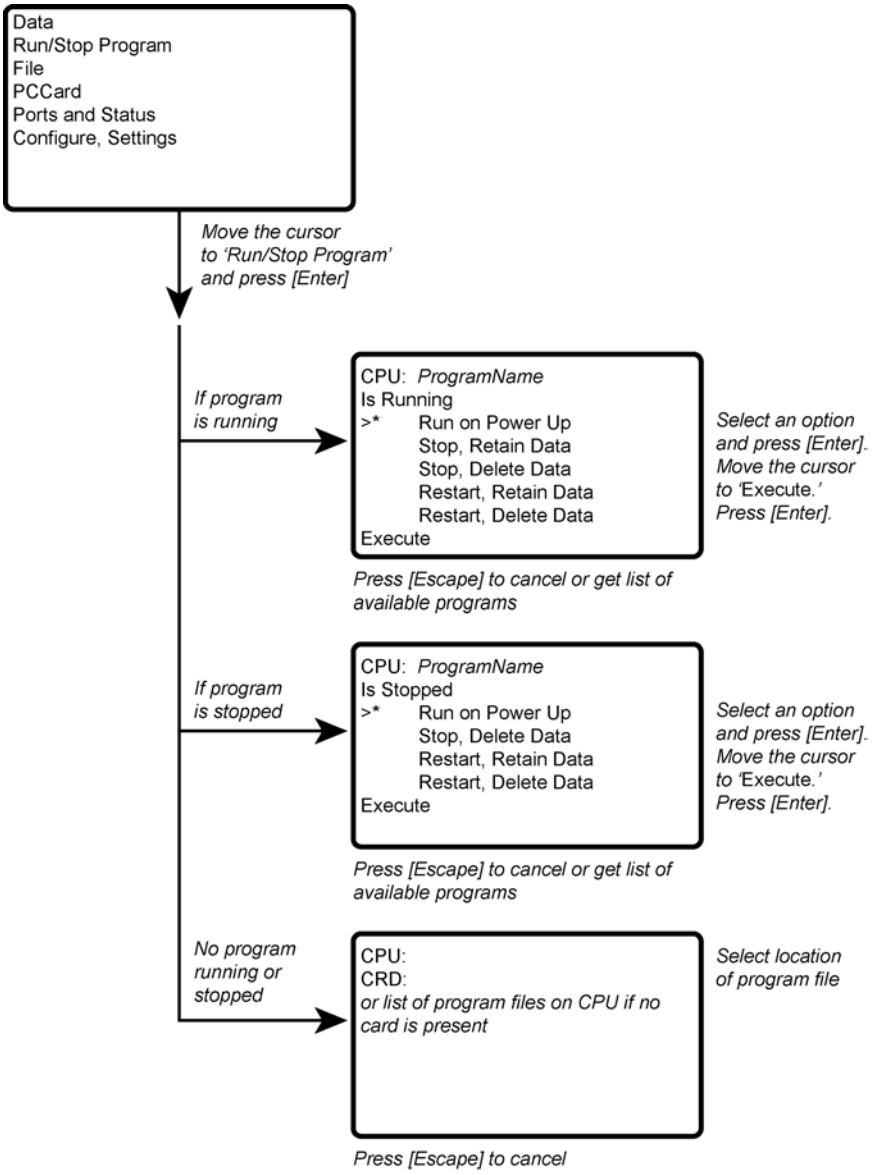

8.8.3 File Display

Figure 116. File Display

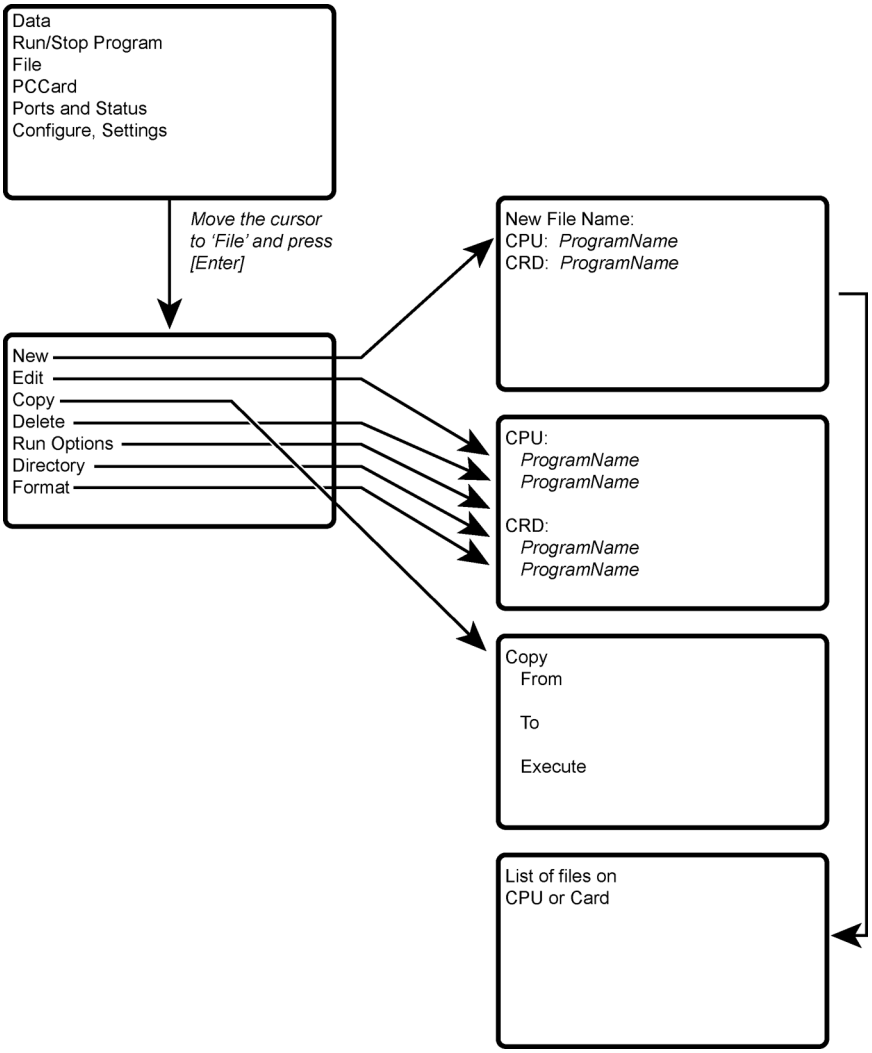

8.8.3.1 File: Edit

The *CRBasic Editor* is recommended for writing and editing datalogger programs. When making minor changes with the CR1000KD Keyboard Display, restart the program to activate the changes, but be aware that, unless programmed for otherwise, all variables, etc. will be reset. Remember that the only copy of changes is in the CR800 until the program is retrieved using datalogger support software or removable memory.

Figure 117. File: Edit

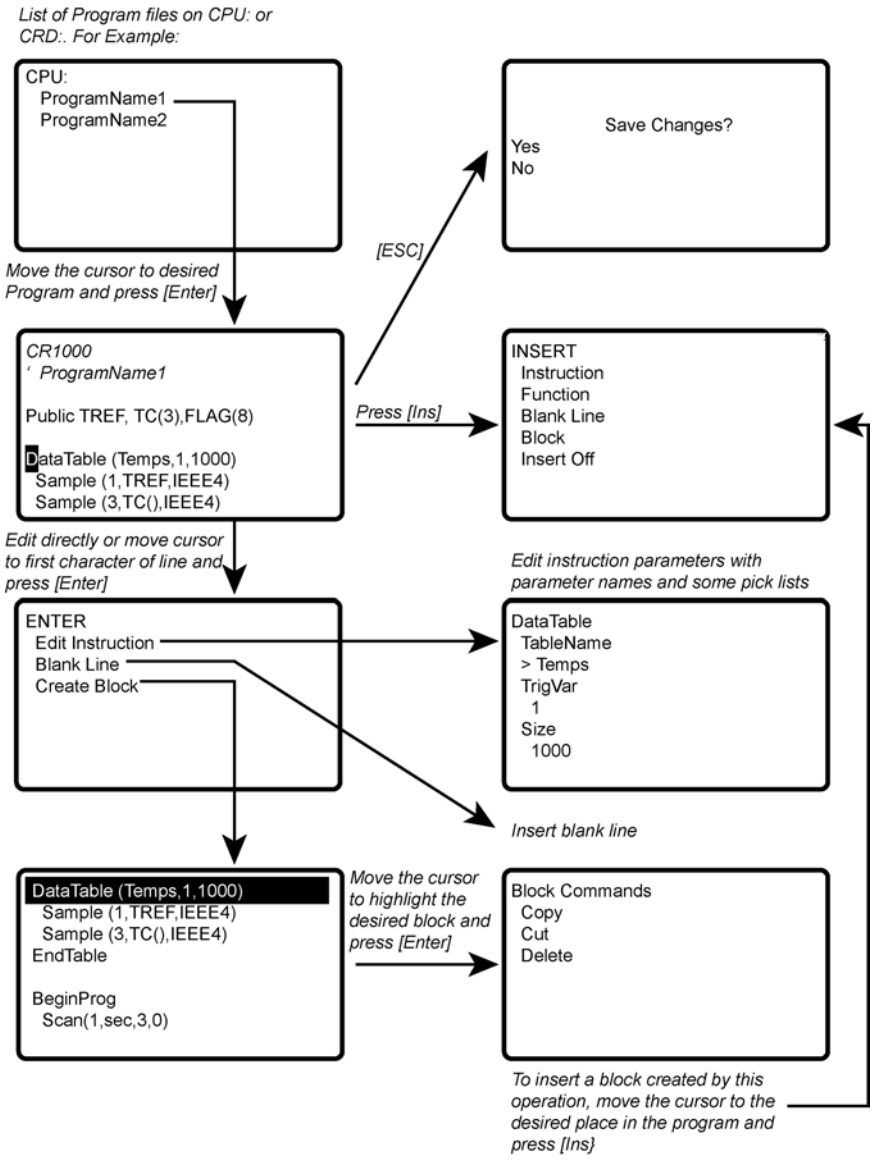

8.8.4 Ports and Status

Read More See the appendix Status, Settings, and Data Table Information (Status/Settings/DTI) *(p. 577)*.

*Figure 118. **C** Terminals (Ports) Status*

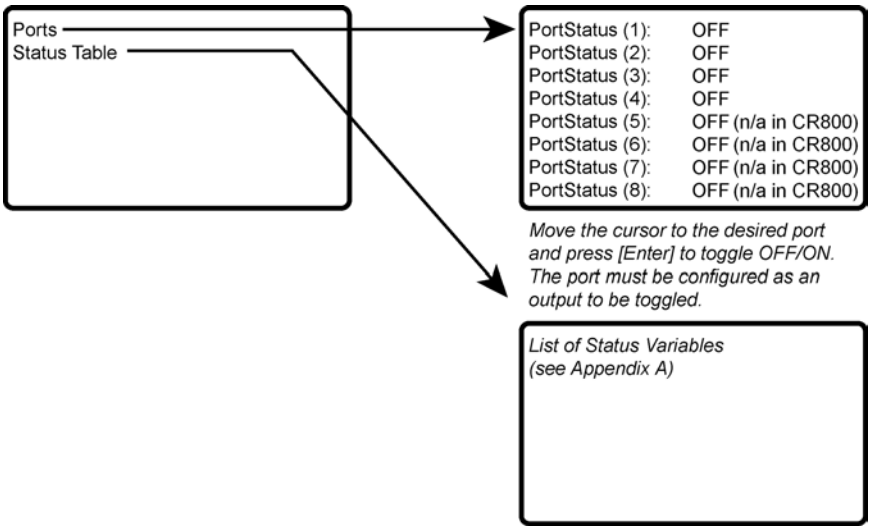

8.8.5 Settings

Figure 119. Settings

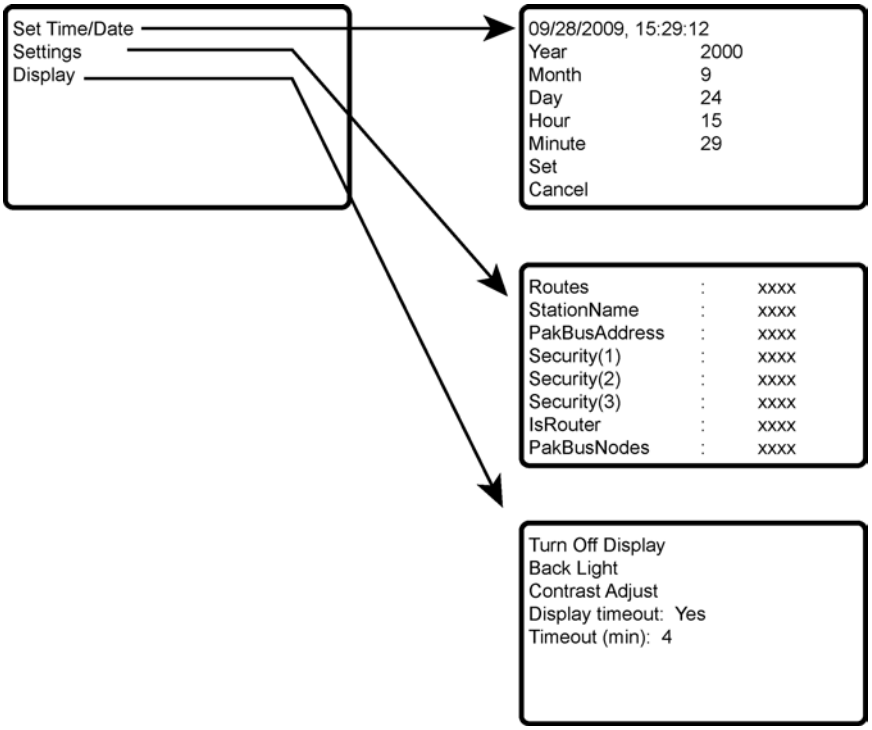

8.8.5.1 Set Time / Date

Move the cursor to time element and press **Enter** to change it. Then move the cursor to **Set** and press **Enter** to apply the change.

8.8.5.2 PakBus Settings

In the **Settings** menu, move the cursor to the PakBus® element and press **Enter** to change it. After modifying, press **Enter** to apply the change.

8.8.6 Configure Display

Figure 120. Configure Display

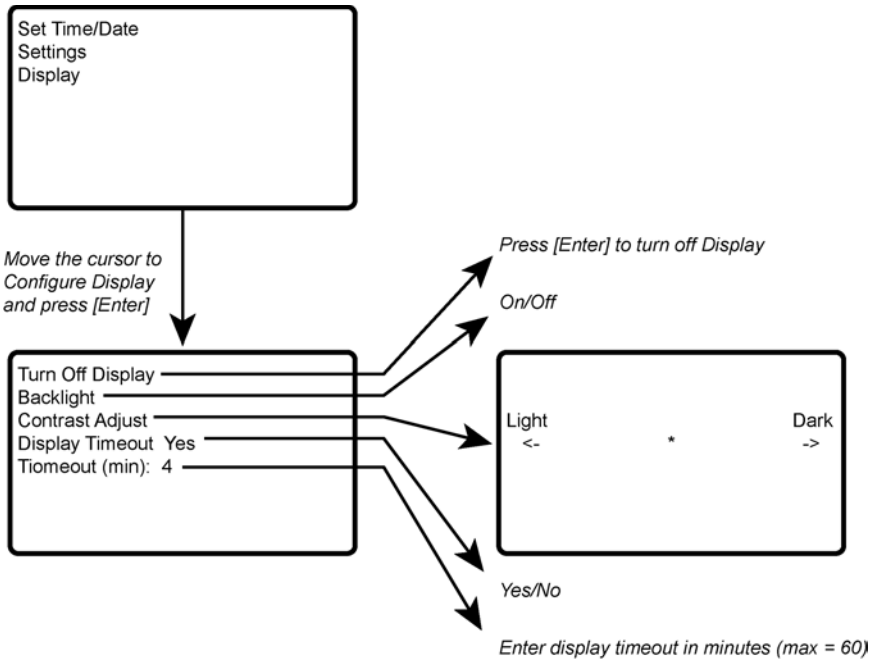

8.9 Program and OS File Compression Q and A

Q: What is Gzip?

A: Gzip is the GNU zip archive file format. This file format and the algorithms used to create it are open source and free to use for any purpose. Files with the .gz extension have been passed through these data compression algorithms to make them smaller. For more information, go to www.gnu.org.

Q: Is there a difference between Gzip and zip?

A: While similar, Gzip and zip use different file compression formats and algorithms. Only program files and OSs compressed with Gzip are compatible with the CR800.

Q: Why compress a program or operating system before sending it to a CR800 datalogger?

A: Compressing a file has the potential of significantly reducing its size. Actual reduction depends primarily on the number and proximity of redundant blocks of information in the file. A reduction in file size means fewer bytes are transferred when sending a file to a datalogger. Compression can reduce transfer times

significantly over slow or high-latency links, and can reduce line charges when using pay-by-the-byte data plans. Compression is of particular benefit when transmitting programs or OSs over low-baud rate terrestrial radio, satellite, or restricted cellular-data plans.

Q: Does my CR800 support Gzip?

A: Version 25 of the standard CR800 operating system supports receipt of Gzip compressed program files and OSs.

Q: How do I Gzip a program or operating system?

A: Many utilities are available for the creation of a Gzip file. This document specifically addresses the use of *7-Zip File Manager*. *7-Zip* is a free, open source, software utility compatible with *Windows*®. Download and installation instructions are available at http://www.7-zip.org/. Once *7-Zip* is installed, creating a Gzip file is as four-step process:

a) Open *7-Zip*.

b) Drag and drop the program or operating system you wish to compress onto the open window.

c) When prompted, set the archive format to “Gzip”.

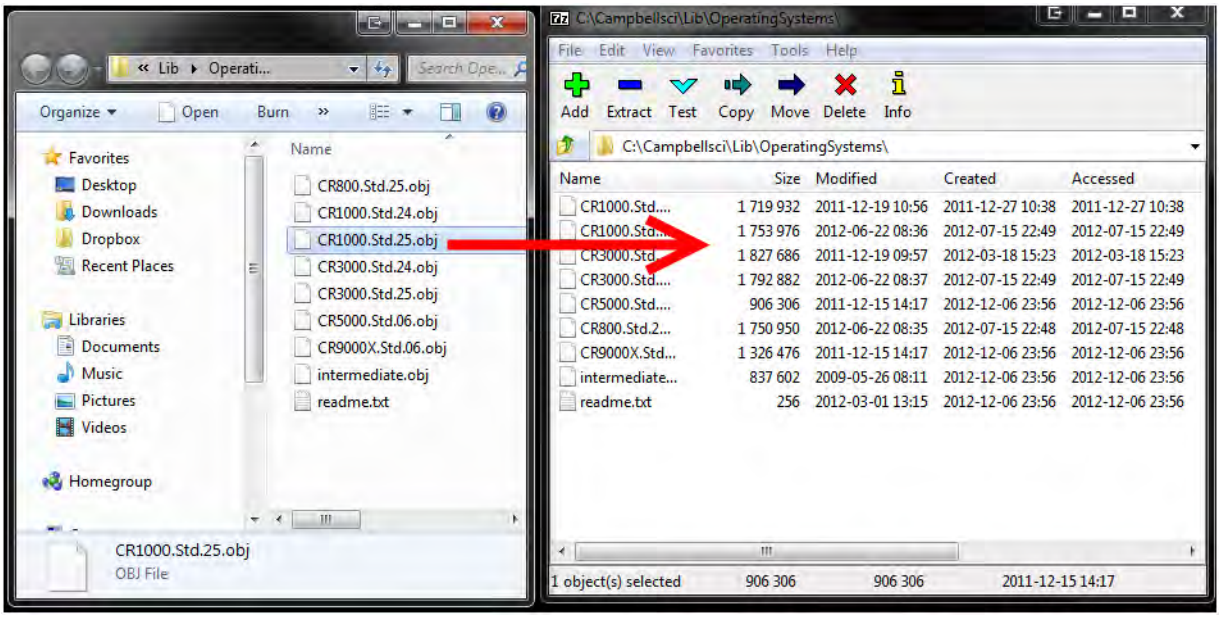

c) When prompted, set the archive format to “Gzip”.

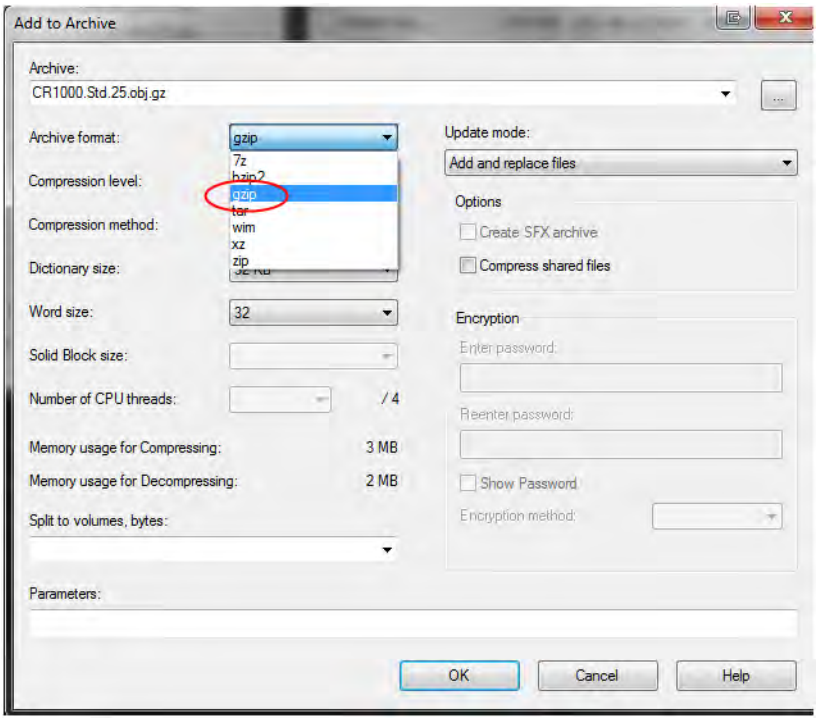

d) Select ***OK***.

The resultant file names will be of the type “myProgram.cr8.gz” and “CR800.Std.25.obj.gz”. Note that the file names end with “.gz”. The ".gz” extension must be preceded with the original file extension (.cr8, .obj) as shown.

Q: How do I send a compressed file to the CR800?

A: A Gzip compressed file can be sent to a CR800 datalogger by clicking the **Send Program** command in the *datalogger support software* (p. 93). Compressed programs can also be sent using **HTTP PUT** to the CR800 web server. The CR800 will not automatically decompress and use compressed files sent with **File Control**, FTP, or a low-level OS download; however, these files can be manually decompressed by marking as **Run Now** using **File Control**, **FileManage()**, and HTTP.

Note Compression has little effect on an encrypted program (see **FileEncrypt()** in the *CRBasic Editor Help*), since the encryption process does not produce a large number of repeatable byte patterns. Gzip has little effect on files that already employ compression such as JPEG or MPEG-4.

Table 120. Typical Gzip File Compression Results

File	*Original Size Bytes*	*Compressed Size Bytes*
CR800 operating system	1,753,976	671,626
Small program	2,600	1,113
Large program	32,157	7,085

8.10 Security — Details

Related Topics:
- *Security — Overview* (p. 90)
- *Security — Details* (p. 443)

The CR800 is supplied void of active security measures. By default, RS-232, Telnet, FTP and HTTP services, all of which give high level access to CR800 data and CRBasic programs, are enabled without password protection.

You may wish to secure your CR800 from mistakes or tampering. The following may be reasons to concern yourself with datalogger security:

- Collection of sensitive data
- Operation of critical systems
- Networks accessible by many individuals

If you are concerned about security, especially TCP/IP threats, you should send the latest *operating system* (p. 85) to the CR800, disable un-used services, and secure those that are used. Security actions to take may include the following:

- Set passcode lockouts
- Set PakBus/TCP password
- Set FTP username and password
- Set AES-128 PakBus encryption key
- Set .csipasswd file for securing HTTP and web API
- Track signatures
- Encrypt program files if they contain sensitive information
- Hide program files for extra protection
- Secure the physical CR800 and power supply under lock and key

Note All security features can be subverted through physical access to the CR800. If absolute security is a requirement, the physical CR800 must be kept in a secure location.

8.10.1 Vulnerabilities

While "security through obscurity" may have provided sufficient protection in the past, Campbell Scientific dataloggers increasingly are deployed in sensitive applications. Devising measures to counter malicious attacks, or innocent tinkering, requires an understanding of where systems can be compromised and how to counter the potential threat.

Note Older CR800 operating systems are more vulnerable to attack than recent updates. Updates can be obtained free of charge at *www.campbellsci.com*.

The following bullet points outline vulnerabilities:

- CR1000KD Keyboard Display
  - Pressing and holding the **Del** key while powering up a CR800 will cause it to abort loading a program and provides a 120 second window to begin changing or disabling security codes in the settings editor (not **Status** table) with the keyboard display.
  - Keyboard display security bypass does not allow telecommunication access without first correcting the security code.

  - **Note** These features are not operable in CR1000KDs with serial numbers less than 1263. Contact Campbell Scientific for information on upgrading the CR1000KD operating system.

- LoggerNet
  - All datalogger functions and data are easily accessed via **RS-232** and Ethernet using Campbell Scientific datalogger support software.
  - Cora command **find-logger-security-code**

- Telnet
  - Watch IP traffic in detail. IP traffic can reveal potentially sensitive information such as FTP login usernames and passwords, and server connection details including IP addresses and port numbers.
  - Watch serial traffic with other dataloggers and devices. A Modbus capable power meter is an example.
  - View data in the **Public** and **Status** tables.
  - View the datalogger program, which may contain sensitive intellectual property, security codes, usernames, passwords, connection information, and detailed or revealing code comments.

- FTP
  - Send and change datalogger programs.
  - Send data that have been written to a file.

- HTTP
  - Send datalogger programs.
  - View table data.
  - Get historical records or other files present on the datalogger drive spaces.
  - More access is given when a .csipasswd is in place, so ensure that users with administrative rights have strong log-in credentials.

8.10.2 Pass-Code Lockout

Pass-code lockouts (historically known in Campbell Scientific dataloggers simply as "security codes") are the oldest method of securing a datalogger. Pass-code lockouts can effectively lock out innocent tinkering and discourage wannabe hackers on non-IP based telecommunication links. However, any serious hacker with physical access to the datalogger or to the telecommunication hardware can, with only minimal trouble, overcome the five-digit pass-codes. Systems adequately secured with pass-code lockouts are probably limited to,

- private, non-IP radio networks
- direct links (hardwire RS-232, short-haul, multidrop, fiber optic)
- non-IP satellite
- land-line, non-IP based telephone, where the telephone number is not published
- cellular phone wherein IP has been disabled, providing a strictly serial connection

Up to three levels of lockout can be set. Valid pass codes are **1** through **65535** (**0** confers no security).

Note Although a pass code can be set to a negative value, a positive code must be entered to unlock the CR800. That positive code will equal 65536 + (negative security code). For example, a security code of -1111 must be entered as 64425 to unlock the CR800.

Methods of enabling pass-code lockout security include the following:

- **Status** table – **Security(1)**, **Security(2)** and **Security(3)** registers are writable variables in the **Status** table wherein the pass codes for security levels 1 through 3 are written, respectively.
- CR1000KD Keyboard Display settings
- *Device Configuration Utility* (*DevConfig*) – Security passwords 1 through 3 are set on the **Deployment** tab.
- **SetSecurity()** instruction – **SetSecurity()** is only executed at program compile time. It may be placed between the **BeginProg** and **Scan()** instructions.

Note Deleting **SetSecurity()** from a CRBasic program is not equivalent to **SetSecurity(0,0,0)**. Settings persist when a new program is downloaded that has no **SetSecurity()** instruction.

Level 1 must be set before **Level 2**. **Level 2** must be set before **Level 3**. If a level is set to 0, any level greater than it will be set to 0. For example, if level 2 is 0 then level 3 is automatically set to 0. Levels are unlocked in reverse order: level 3 before level 2, level 2 before level 1. When a level is unlocked, any level greater than it will also be unlocked, so unlocking level 1 (entering the **Level 1** security code) also unlocks levels 2 and 3.

Functions affected by each level of security are:

- Level 1 — Collecting data, setting the clock, and setting variables in the **Public** table are unrestricted, requiring no security code. If **Security1** code is entered, read/write values in the **Status** table can be changed, and the datalogger program can be changed or retrieved.
- Level 2 — Data collection is unrestricted, requiring no security code. If the user enters the **Security2** code, the datalogger clock can be changed and variables in the **Public** table can be changed.
- Level 3 — When this level is set, all communication with the datalogger is prohibited if no security code is entered. If **Security3** code is entered, data can be viewed and collected from the datalogger (except data suppressed by the **TableHide()** instruction in the CRBasic program). If **Security2** code is entered, data can be collected, public variables can be set, and the clock can be set. If **Security1** code is entered, all functions are unrestricted.

8.10.2.1 Pass-Code Lockout By-Pass

Pass-code lockouts can be bypassed at the datalogger using a CR1000KD Keyboard Displaykeyboard display. Pressing and holding the **Del** key while powering up a CR800 will cause it to abort loading a program and provide a 120 second window to begin changing or disabling security codes in the settings editor (not **Status** table) with the keyboard display.

Keyboard display security bypass does not allow telecommunication access without first correcting the security code.

Note These features are not operable in CR1000KDs with serial numbers less than 1263. Contact Campbell Scientific for information on upgrading the CR1000KD operating system.

8.10.3 Passwords

Passwords are used to secure IP based communications. They are set in various telecommunication schemes with the .csipasswd file, CRBasic PakBus instructions, CRBasic TCP/IP instructions, and in CR800 settings.

8.10.3.1 .csipasswd

The .csipasswd file is a file created and edited through *DevConfig* (p. 109), and which resides on the CPU: drive of the CR800. It contains credentials (usernames and passwords) required to access datalogger functions over IP telecommunications. See *Web Service API* (p. 402) for details concerning the .csipasswd file.

8.10.3.2 PakBus Instructions

The following CRBasic PakBus instructions have provisions for password protection:

- **ModemCallBack()**
- **SendVariable()**
- **SendGetVariables()**
- **SendFile()**
- **GetVariables()**
- **GetFile()**
- **GetDataRecord()**

8.10.3.3 TCP/IP Instructions

The following CRBasic instructions that service CR800 IP capabilities have provisions for password protection:

- **EMailRecv()**
- **EMailSend()**
- **FTPClient()**

8.10.3.4 Settings — Passwords

Settings, which are accessible with *DevConfig* (p. 109), enable the entry of the following passwords:

- **PPP Password**
- **PakBus/TCP Password**
- **FTP Password**
- **TLS Password (Transport Layer Security (TLS) Enabled)**
- **TLS Private Key Password**
- **AES-128 Encrypted PakBus Communication Encryption** (p. 447) **Key**

See the section *Status, Settings, and DTI (Registers* (p. 112)) for more information.

8.10.4 File Encryption

Encryption is available for CRBasic program files and provides a means of securing proprietary code or making a program tamper resistant. .CR<X> files, or files specified by the **Include()** instruction, can be encrypted. The CR800 decrypts program files on the fly. While other file types can be encrypted, no tool is provided for decryption.

The *CRBasic Editor* encryption facility (**Menus** | **File** | **Save and Encrypt**) creates an encrypted copy of the original file in PC memory. The encrypted file is named after the original, but the name is appended with "_enc". The original file remains intact. The **FileEncrypt()** instruction encrypts files already in CR800 memory. The encrypted file overwrites and takes the name of the original. The **Encryption()** instruction encrypts and decrypts the contents of a file.

One use of file encryption may be to secure proprietary code but make it available for copying.

8.10.5 Communication Encryption

PakBus is the CR800 root communication protocol. By encrypting certain portions of PakBus communications, a high level of security is achieved. See *PakBus Encryption* (p. 385) for more information.

8.10.6 Hiding Files

The option to hide CRBasic program files provides a means, apart from or in conjunction with file encryption, of securing proprietary code, prevent it from being copied, or making it tamper resistant. .CR<X> files, or files specified by the **Include()** instruction, can be hidden using the **FileHide()** instruction. The CR800 can locate and use hidden files on the fly, but a listing of the file or the file name are not available for viewing. See *File Management* (p. 361) for more information.

8.10.7 Signatures

Recording and monitoring system and program signatures are important components of a security scheme. Read more about use of signatures in *Programming to Use Signatures* (p. 167) and *Signatures: Example Programs* (p. 176).

9. Maintenance — Details

Related Topics:
• *Maintenance — Overview* (p. 92)
• *Maintenance — Details* (p. 449)

- Protect the CR800 from humidity and moisture.
- Replace the internal lithium battery periodically.
- Send to Campbell Scientific for factory calibration every three years.

9.1 Protection from Moisture — Details

Protection from Moisture — Overview (p. 92)
Protection from Moisture — Details (p. 97)
Protection from Moisture — Products (p. 636)

When humidity levels reach the dew point, condensation occurs and damage to CR800 electronics can result. Effective humidity control is the responsibility of the user.

The CR800 module is protected by a packet of silica gel desiccant, which is installed at the factory. This packet is replaced whenever the CR800 is repaired at Campbell Scientific. The module should not normally be opened except to replace the internal lithium battery.

Adequate desiccant should be placed in the instrumentation enclosure to provide added protection.

9.2 Replacing the Internal Battery

CAUTION Fire, explosion, and severe-burn hazard. Misuse or improper installation of the internal lithium battery can cause severe injury. Do not recharge, disassemble, heat above 100 °C (212 °F), solder directly to the cell, incinerate, or expose contents to water. Dispose of spent lithium batteries properly.

The CR800 contains a lithium battery that operates the clock and SRAM when the CR800 is not powered. The CR800 does not draw power from the lithium battery while it is fully powered by a *power supply* (p. 85). In a CR800 stored at room temperature, the lithium battery should last approximately three years (less at temperature extremes). In installations where the CR800 remains powered, the lithium cell should last much longer.

While powered from an external source, the CR800 measures the voltage of the lithium battery ever 24 hours. This voltage is displayed in the **Status** table (see the appendix *Status Table and Settings* (p. 577)) in the **Lithium Battery** field. A new battery supplies approximately 3.6 Vdc. Replace the battery when voltage is approximately 2.7 Vdc.

- When the lithium battery is removed (or is allowed to become depleted below 2.7 Vdc and CR800 primary power is removed), the CRBasic program and most settings are maintained, but the following are lost:

- Run-now and run-on power-up settings.
- Routing and communication logs (relearned without user intervention).
- Time. Clock will need resetting when the battery is replaced.
- Final-memory data tables.

A replacement lithium battery can be purchased from Campbell Scientific or another supplier. Table *Internal Lithium-Battery Specifications* (p. 450) lists battery part numbers and key specifications.

Table 121. Internal Lithium-Battery Specifications

Manufacturer	Tadiran
Tadiran Model Number	TL-5902/S
Campbell Scientific, Inc. pn	13519
Voltage	3.6 V
Capacity	1.2 Ah
Self-discharge rate	1%/year @ 20 °C
Operating temperature range	–55 to 85 °C

When reassembling the module to the wiring panel, check that the module is fully seated or connected to the wiring panel by firmly pressing them together by hand.

Figure 121. Remove Retention Nuts

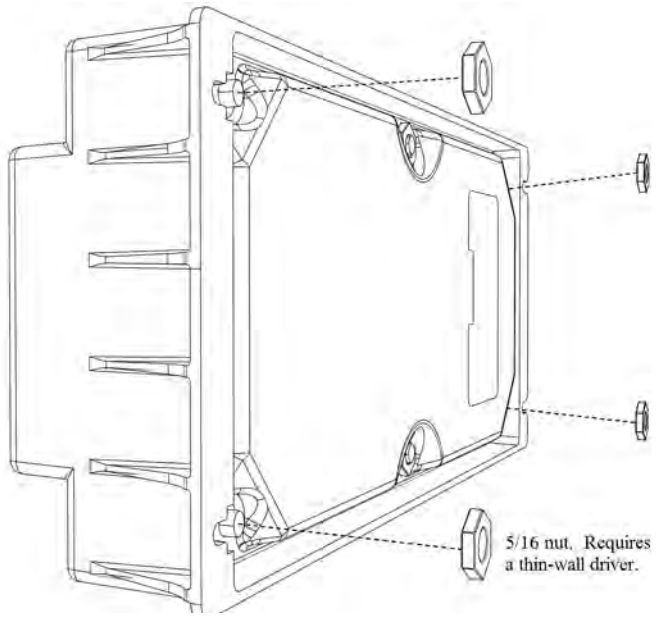

Fully loosen (only loosen) the two knurled thumbscrews. They will remain attached to the module.

Figure 122. Pull Edge Away from Panel

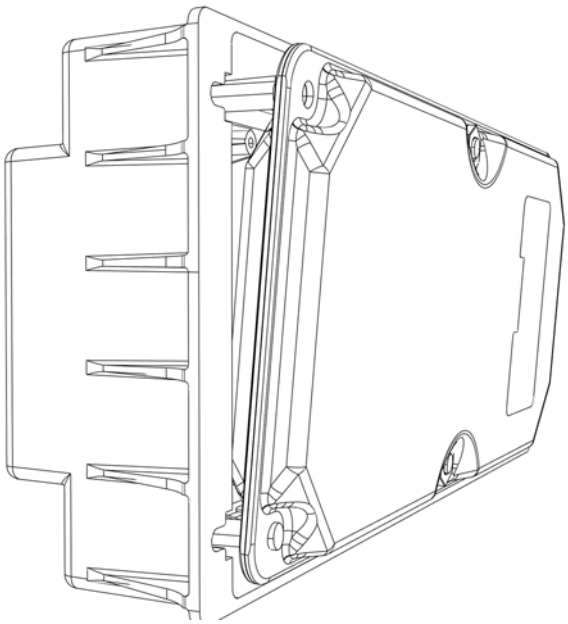

Pull one edge of the canister away from the wiring panel to loosen it from three internal connector seatings.

Figure 123. Remove Nuts to Disassemble Canister

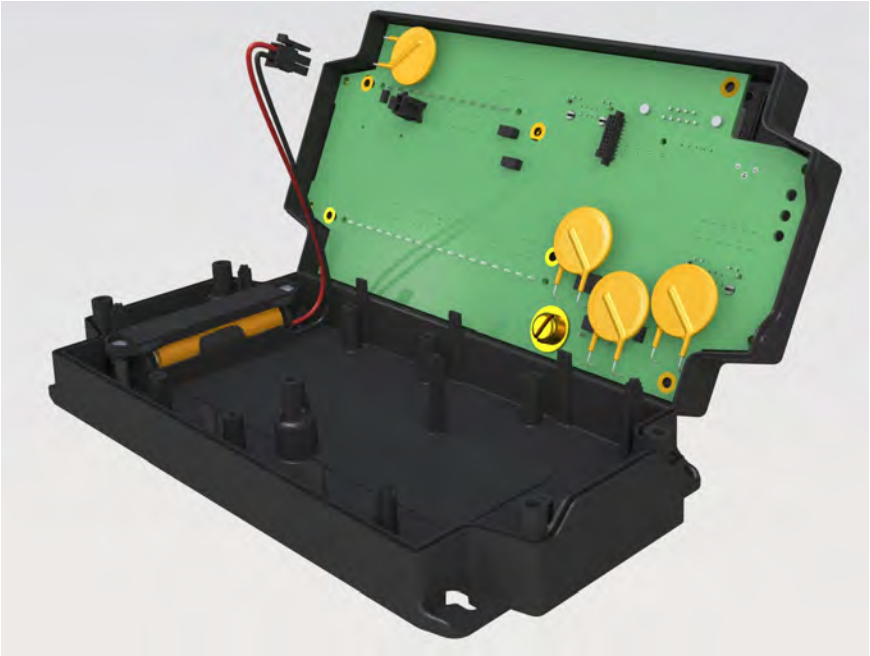

Remove six nuts, then open the clam shell.

Figure 124. Remove and Replace Battery

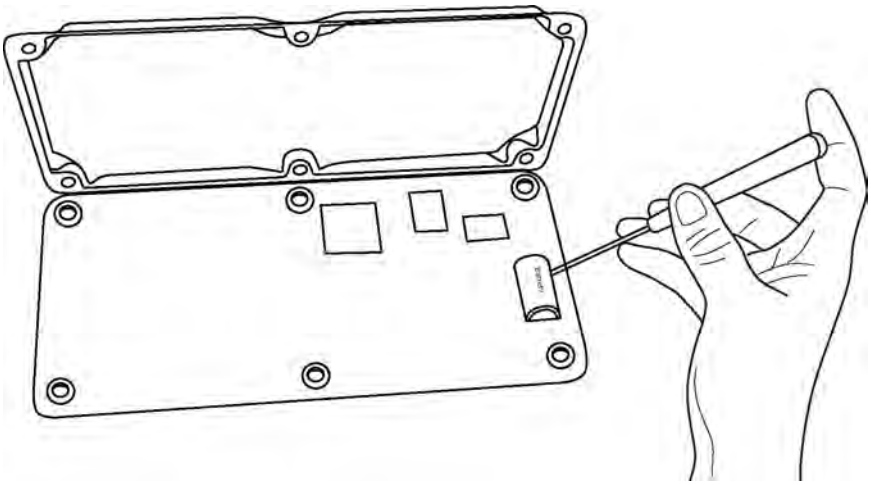

Remove the lithium battery by gently prying it out with a small flat point screwdriver. Reverse the disassembly procedure to reassemble the CR800. Take particular care to ensure the canister is reseated tightly into the three connectors.

9.3 Factory Calibration or Repair Procedure

Related Topics
- *Auto Calibration — Overview* (p. 91)
- *Auto Calibration — Details* (p. 326)
- *Auto-Calibration — Errors* (p. 466)
- *Offset Voltage Compensation* (p. 315)
- *Factory Calibration* (p. 92)
- *Factory Calibration or Repair Procedure* (p. 452)

If sending the CR800 to Campbell Scientific for calibration or repair, consult first with a Campbell Scientific application engineer. If the CR800 is malfunctioning, be prepared to perform some troubleshooting procedures while on the phone with the application engineer. Many problems can be resolved with a telephone conversation. If calibration or repair is needed, the following procedures should be followed when sending the product:

Products may not be returned without prior authorization. The following contact information is for US and International customers residing in countries served by Campbell Scientific, Inc. directly. Affiliate companies handle repairs for customers within their territories. Please visit *www.campbellsci.com* to determine which Campbell Scientific company serves your country.

To obtain a Returned Materials Authorization (RMA), contact CAMPBELL SCIENTIFIC, INC., phone (435) 227-2342. After an application engineer determines the nature of the problem, an RMA number will be issued. Please write this number clearly on the outside of the shipping container. Campbell Scientific's shipping address is:

CAMPBELL SCIENTIFIC, INC.
RMA#_____
815 West 1800 North
Logan, Utah 84321-1784

For all returns, the customer must fill out a "Statement of Product Cleanliness and Decontamination" form and comply with the requirements specified in it. The form is available from our web site at *www.campbellsci.com/repair*. A completed form must be either emailed to *repair@campbellsci.com* or faxed to 435-227-9579. Campbell Scientific is unable to process any returns until we receive this form. If the form is not received within three days of product receipt or is incomplete, the product will be returned to the customer at the customer's expense. Campbell Scientific reserves the right to refuse service on products that were exposed to contaminants that may cause health or safety concerns for our employees.

10. Troubleshooting

If a system is not operating properly, please contact a Campbell Scientific application engineer for assistance. When using sensors, peripheral devices, or telecommunication hardware, look to the manuals for those products for additional help.

Note If a Campbell Scientific product needs to be returned for repair or recalibration, a *Return Materials Authorization* (p. 3) number is first required. Please contact a Campbell Scientific application engineer.

10.1 Troubleshooting — Essential Tools

- Multimeter (combination volt meter and resistance meter). Inexpensive ($20.00) meters are useful. The more expensive meters have additional modes of operation that are useful in some situations.
- Cell or satellite phone with contact information for Campbell Scientific application engineers. Establish a current contact at Campbell Scientific before going to the field. An application engineer may be able to provide you with information that will better prepare you for the field visit.
- Product documentation in a reliable format and easily readable at the installation site. Sun glare, dust, and moisture often make electronic media difficult to use and unreliable.

10.2 Troubleshooting — Basic Procedure

1. Check the voltage of the primary power source at the **POWER IN** terminals on the face of the CR800.

2. Check wires and cables for the following:

   - Loose connection points
   - Faulty connectors
   - Cut wires
   - Damaged insulation, which allows water to migrate into the cable. Water, whether or not it comes in contact with wire, can cause system failure. Water may increase the dielectric constant of the cable sufficiently to imped sensor signals, or it may migrate into the sensor, which will damage sensor electronics.

3. Check the CRBasic program. If the program was written solely with *Short Cut*, the program is probably not the source of the problem. If the program was written or edited with *CRBasic Editor*, logic and syntax errors could easily have crept into the code. To troubleshoot, create a stripped down version of the program, or break it up into multiple smaller units to test individually. For example, if a sensor signal-to-data conversion is faulty, create a program that only measures that sensor and stores the data, absent from all other inputs and data. Write these mini-programs before going to the field, if possible.

10.3 Troubleshooting — Error Sources

Data acquisition systems are complex, the possible configurations endless, and permutations mind boggling. Nevertheless, by using a systematic approach using

the principle of independent verification, the root cause of most errors can be determined and remedies put into effect.

Errors are indicated by multiple means, a few of which actually communicate using the word **Error**. Things that indicate that a closer look should be taken include:

- **Error**
- **NAN**
- **INF**
- Rapidly changing measurements
- Incorrect measurements

These occur in different forms and in different places.

A key concept in troubleshooting is the concept of *independent verification*, which is use of outside references to verify the function of dis-function of a component of the system. For example, a multimeter is an independent measurement device that can be used to check sensor signal, sensor resistance, power supplies, cable continuity, excitation and control outputs, and so forth.

A very good place to start looking for trouble is in the data produced by the system. At the root, you must be able to look at the data and determine if it falls within a reasonable range. For example, consider an application measuring photosynthetic photon flux (PPF). PPF ranges from 0 (dark) to about 2000 µmoles m^{-2} s^{-1}. If the measured value is less than 0 or greater than 2000, an error is probably being introduced somewhere in the system. If the measured value is 1000 at noon under a clear summer sky, an error is probably being introduced somewhere in the system.

Error sources usually fall into one or more of the following categories:

- CRBasic program
  - if the program was written completely by Short Cut, errors are very rare.
  - if the program was written or edited by a person, errors are much more common.
  - Channel assignments, input-range codes, and measurement mode arguments are common sources of error.
- Hardware
  - Mis-wired sensors or power sources are common.
  - Damaged hardware
  - Water, humidity, lightning, voltage transients, EMF
  - Visible symptoms
  - Self-diagnostics
  - Watchdog errors
- Firmware
  - Operating system bugs are rare, but possible.
- Datalogger support software
  - Bugs are uncommon, but do occur.
- Externally caused errors

10.4 Troubleshooting — Status Table

Information in the **Status** table lends insight into many problems. The appendix *Status Table and Settings* (p. 577) documents **Status** table registers and provides some insights as to how to use the information in troubleshooting.

Review the section *Status Table as Debug Resource* (p. 461). Many of these errors match up with like-sounding errors in the Station Status utility in datalogger support software.

10.5 Programming

Analyze data soon after deployment to ensure the CR800 is measuring and storing data as intended. Most measurement and data-storage problems are a result of one or more CRBasic program bugs.

10.5.1 Program Does Not Compile

Although the *CRBasic Editor* compiler states that a program compiles OK, the program may not run or even compile in the CR800. This is rare, but reasons may include:

- The CR800 has a different (usually older) operating system that is not fully compatible with the PC compiler. Check the two versions if in doubt. The PC compiler version is shown on the first line of the compile results.
- The program has large memory requirements for data tables or variables and the CR800 does not have adequate memory. This normally is flagged at compile time, in the compile results. If this type of error occurs, check the following:
    - Copies of old programs on the CPU: drive. The CR800 keeps copies of all program files unless they are deleted, the drive is formatted, or a new operating system is loaded with *DevConfig* (p. 109).
    - That the USR: drive, if created, is not too large. The USR: drive may be using memory needed for the program.
    - that a program written for a 4 MB CR800 is being loaded into a 2 MB CR800.

10.5.2 Program Compiles / Does Not Run Correctly

If the program compiles but does not run correctly, timing discrepancies are often the cause. Neither *CRBasic Editor* nor the CR800 compiler attempt to check whether the CR800 is fast enough to do all that the program specifies in the time allocated. If a program is tight on time, look further at the execution times. Check the measurement and processing times in the **Status** table (**MeasureTime**, **ProcessTime**, **MaxProcTime**) for all scans, then try experimenting with the **InstructionTimes()** instruction in the program. Analyzing **InstructionTimes()** results can be difficult due to the multitasking nature of the logger, but it can be a useful tool for fine tuning a program.

10.5.3 NAN and ±INF

NAN (not-a-number) and **±INF** (infinite) are data words indicating an exceptional occurrence in datalogger function or processing. **NAN** is a constant that can be used in expressions as shown in the following code snip that sets a CRBasic control feature (a flag) if the wind direction is **NAN**:

```
If WindDir = NAN Then
  WDFlag = False
Else
  WDFlag = True
EndIf
```

NAN can also be used in conjunction with the disable variable (***DisableVar***) in output processing (data storage) instructions as shown in CRBasic example *Using NAN to Filter Data* *(p. 460).*

10.5.3.1 Measurements and NAN

A **NAN** indicates an invalid measurement.

10.5.3.1.1 Voltage Measurements

The CR800 has the following user-selectable voltage ranges: ±5000 mV, ±2500 mV, ±250 mV, and ±25 mV. Input signals that exceed these ranges result in an over-range indicated by a **NAN** for the measured result. With auto range to automatically select the best input range, a **NAN** indicates that either one or both of the two measurements in the auto-range sequence over ranged. See the section *Calibration Errors* *(p. 466).*

A voltage input not connected to a sensor is floating and the resulting measured voltage often remains near the voltage of the previous measurement. Floating measurements tend to wander in time, and can mimic a valid measurement. The **C** (open input detect/common-mode null) range-code option is used to force a NAN result for open (floating) inputs.

10.5.3.1.2 SDI-12 Measurements

NAN is loaded into the first **SDI12Recorder()** variable under the following conditions:

- CR800 is busy with terminal commands
- When the command is an invalid command.
- When the sensor aborts with CR LF and there is no data.
- When **0** is returned for the number of values in response to the **M!** or **C!** command.

10.5.3.2 Floating-Point Math, NAN, and ±INF

Table *Math Expressions and CRBasic Results* *(p. 459)* lists math expressions, their CRBasic form, and IEEE floating point-math result loaded into variables declared as FLOAT or STRING.

10.5.3.3 Data Types, NAN, and ±INF

NAN and **±INF** are presented differently depending on the declared-variable data type. Further, they are recorded differently depending on the final-memory data type chosen compounded with the declared-variable data type used as the source (table *Variable and FS Data Types with NAN and ±INF* (p. 459)). For example, **INF**, in a variable declared **As LONG**, is represented by the integer –**2147483648**. When that variable is used as the source, the final-memory word when sampled as UINT2 is stored as 0.

Table 122. Math Expressions and CRBasic Results

Expression	*CRBasic Expression*	*Result*
0 / 0	`0 / 0`	**NAN**
$\infty - \infty$	`(1 / 0) - (1 / 0)`	**NAN**
$(-1)^{\infty}$	`-1 ^ (1 / 0)`	**NAN**
$0 \bullet -\infty$	`0 · (-1 · (1 / 0))`	**NAN**
$\pm\infty / \pm\infty$	`(1 / 0) / (1 / 0)`	**NAN**
1^{∞}	`1 ^ (1 / 0)`	**NAN**
$0 \bullet \infty$	`0 · (1 / 0)`	**NAN**
x / 0	`1 / 0`	**INF**
x / –0	`1 / -0`	**INF**
-x / 0	`-1 / 0`	**-INF**
-x / –0	`-1 / -0`	**-INF**
∞^{0}	`(1 / 0) ^ 0`	**INF**
0^{∞}	`0 ^ (1 / 0)`	**0**
0^{0}	`0 ^ 0`	**1**

Table 123. Variable and Final-Memory Data Types with NAN and ±INF

Variable Type	Test Expression	Public / Dim Variables	Final-Memory Data Type & Associated Stored Values							
			FP2	IEEE4	UINT2	UNIT4	STRING	BOOL	BOOL8	LONG
As FLOAT	1 / 0	**INF**	**INF**[1]	**INF**[1]	**65535**[2]	**4294967295**	**+INF**	**TRUE**	**TRUE**	**2,147,483,647**
	0 / 0	**NAN**	**NAN**	**NAN**	**0**	**2147483648**	**NAN**	**TRUE**	**TRUE**	**-2,147,483,648**
As LONG	1 / 0	**2,147,483,647**	**7999**	**2.147484E09**	**65535**	**2147483647**	**2147483647**	**TRUE**	**TRUE**	**2,147,483,647**
	0 / 0	**-2,147,483,648**	**-7999**	**-2.147484E09**	**0**	**2147483648**	**-2147483648**	**TRUE**	**TRUE**	**-2,147,483,648**
As Boolean	1 / 0	**TRUE**	**-1**	**-1**	**65535**	**4294967295**	**-1**	**TRUE**	**TRUE**	**-1**
	0 / 0	**TRUE**	**-1**	**-1**	**65535**	**4294967295**	**-1**	**TRUE**	**TRUE**	**-1**
As STRING	1 / 0	**+INF**	**INF**	**INF**	**65535**	**2147483647**	**+INF**	**TRUE**	**TRUE**	**2147483647**
	0 / 0	**NAN**	**NAN**	**NAN**	**0**[3]	**2147483648**	**NAN**	**TRUE**	**TRUE**	**-2147483648**

[1] Except **Average()** outputs **NAN**
[2] Except **Average()** outputs **0**
[3] **65535** in operating systems prior to v. 28

10.5.3.4 Output Processing and NAN

When a measurement or process results in **NAN**, any output process with ***DisableVar*** = **FALSE** that includes an **NAN** measurement. For example,

```
Average(1,TC_TempC,FP2,False)
```

will result in **NAN** being stored as final-storage data for that interval.

However, if ***DisableVar*** is set to **TRUE** each time a measurement results in **NAN**, only non-NAN measurements will be included in the output process. CRBasic example *Using NAN to Filter Data* (p. 460) demonstrates the use of conditional statements to set ***DisableVar*** to **TRUE** as needed to filter **NAN** from output processes.

Note If all measurements result in **NAN**, **NAN** will be stored as final-storage data regardless of the use of ***DisableVar***.

CRBasic Example 68. Using NAN to Filter Data

```
'This program example demonstrates the use of NAN to filter what data are used in output processing
functions such as
'averages, maxima, and minima.

'Declare Variables and Units
Public TC_RefC
Public TC_TempC
Public DisVar As Boolean

'Define Data Tables
DataTable(TempC_Data,True,-1)
  DataInterval(0,30,Sec,10)
  Average(1,TC_TempC,FP2,DisVar)              'Output process
EndTable

'Main Program
BeginProg
  Scan(1,Sec,1,0)

    'Measure Thermocouple Reference Temperature
    PanelTemp(TC_RefC,250)

    'Measure Thermocouple Temperature
    TCDiff(TC_TempC,1,mV2_5,1,TypeT,TC_RefC,True,0,250,1.0,0)

    'DisVar Filter
    If TC_TempC = NAN Then
      DisVar = True
    Else
      DisVar = False
    EndIf

    'Call Data Tables and Store Data
    CallTable(TempC_Data)

  NextScan
EndProg
```

10.5.4 Status Table as Debug Resource

Related Topics:
- *Status, Settings, and Data Table Information (Status/Settings/DTI)* (p. 577)
- *Common Uses of the Status Table* (p. 578)
- *Status Table as Debug Resource* (p. 461)

Consult the CR800 **Status** table when developing a program or when a problem with a program is suspected. Critical **Status** table registers to review include **CompileResults**, **SkippedScan**, **SkippedSlowScan**, **SkippedRecord**, **ProgErrors**, **MemoryFree**, **VarOutOfBounds**, **WatchdogErrors** and **Calibration**.

10.5.4.1 CompileResults

CompileResults reports messages generated by the CR800 at program upload and compile-time. Messages may also added as the program runs. Error messages

may not be obvious because the display is limited. Much of this information is more easily accessed through the *datalogger support software* (p. 93) station status report. The message reports the following:

- program compiled OK
- warnings about possible problems
- run-time errors
- variables that caused out-of-bounds conditions
- watchdog information
- memory errors

Warning messages are posted by the CRBasic compiler to advise that some expected feature may not work. Warnings are different from error messages in that the program will still operate when a warning condition is identified.

A rare error is indicated by **mem3 fail** type messages. These messages can be caused by random internal memory corruption. When seen on a regular basis with a given program, an operating system error is indicated. **Mem3 fail** messages are not caused by user error, and only rarely by a hardware fault. Report any occurrence of this error to a Campbell Scientific application engineer, especially if the problem is reproducible. Any program generating these errors is unlikely to be running correctly.

Examples of some of the more common warning messages are listed in table *Warning Message Examples* (p. 462).

Table 124. Warning Message Examples

Message	*Meaning*
CPU:DEFAULT.CR1 -- Compiled in PipelineMode. **Error(s) in CPU:NewProg.CR1:** **line 13: Undeclared variable Battvolt.**	A new program sent to the datalogger failed to compile, and the datalogger reverted to running DEFAULT.cr8.
Warning: Cannot open include file CPU: Filename.cr8	The filename in the Include instruction does not match any file found on the specified drive. Since it was not found, the portion of code referenced by Include will not be executed.
Warning: Cannot open voice.txt	voice.txt, a file required for use with a COM310 voice phone modem, was not found on the CPU: drive.
Warning: COM310 word list cannot be a variable.	The *Phrases* parameter of the **VoicePhrases()** instruction was assigned a variable name instead of the required string of comma-separated words from the Voice.TXT file.
Warning: EndIf never reached at runtime.	Program will never execute the **EndIf** instruction. In this case, the cause is a **Scan()** with a *Count* parameter of 0, which creates an infinite loop within the program logic.

Table 124. Warning Message Examples

Message	*Meaning*
Warning: Internal Data Storage Memory was re-initialized.	Sending a new program has caused final-memory to be re-allocated. Previous data are no longer accessible.
Warning: Machine self-calibration failed.	Indicates a problem with the analog measurement hardware during the self calibration. An invalid external sensor signal applying a voltage beyond the internal ±8 Vdc supplies on a voltage input can induce this error. Removing the offending signal and powering up the logger will initiate a new self-calibration. If the error does not occur on power-up, the problem is corrected. If no invalid external signals are present and / or self-calibration fails again on power-up, the CR800 should be repaired by a qualified technician.
Warning: Slow Seq 1, Scan 1, will skip scans if running with Scan 1	**SlowSequence** scan rate is <= main scan rate. This will cause skipped scans on the **SlowSequence**.
Warning: Table [tablename] is declared but never called.	No data will be stored in [tablename] because there is no **CallTable()** instruction in the program that references that table.
Warning: Units: a_units_name_that_is_more_than_38_char a... too long will be truncated to 38 chars.	The label assigned with the **Units** argument is too long and will be truncated to the maximum allowed length.
Warning: Voice word TEH is not in Voice.TXT file	The misspelled word TEH in the **VoiceSpeak()** instruction is not found in Voice.TXT file and will not be spoken by the voice modem.

10.5.4.2 SkippedScan

Skipped scans are caused by long programs with short scan intervals, multiple **Scan()** / **NextScan** instructions outside a **SubScan()** or **SlowSequence**, or by other operations that occupy the processor at scan start time. Occasional skipped scans may be acceptable but should be avoided. Skipped scans may compromise frequency measurements made on terminals configured for pulse input. The error occurs because counts from a scan and subsequent skipped scans are regarded by the CR800 as having occurred during a single scan. The measured frequency can be much higher than actual. Be careful that scans that store data are not skipped. If any scan skips repeatedly, optimization of the datalogger program or reduction of on-line processing may be necessary.

Skipped scans in Pipeline Mode indicate an increase in the maximum buffer depth is needed. Try increasing the number of scan buffers (third parameter of the **Scan()** instruction) to a value greater than that shown in the **MaxBuffDepth** register in the **Status** table.

10.5.4.3 SkippedSlowScan

The CR800 automatically runs a slow sequence to update the calibration table. When the calibration slow sequence skips, the CR800 will try to repeat that step of the calibration process next time around. This simply extends calibration time.

10.5.4.4 SkippedRecord

SkippedRecord is normally incremented when a write-to-data-table event is skipped, which usually occurs because a scan is skipped. **SkippedRecord** is not incremented by all events that leave gaps in data, including cycling power to the CR800.

10.5.4.5 ProgErrors

Should be **0**. If not, investigate.

10.5.4.6 MemoryFree

A number less than 4 kB is too small and may lead to memory-buffer related errors.

10.5.4.7 VarOutOfBounds

Related Topics:
- *Declaring Arrays* (p. 133)
- Arrays of Multipliers and Offsets
- *VarOutOfBounds* (p. 464)

When programming with variable arrays, care must be taken to match the array size to the demands of the program. For example, if an operation attempts to write to 16 elements in array **ExArray()**, but **ExArray()** was declared with 15 elements (for example, **Public** ExArray(15)), the **VarOutOfBound** runtime error counter is incremented in the **Status** table each time the absence of a sixteenth element is encountered.

The CR800 attempts to catch **VarOutOfBound** errors at compile time (not to be confused with the *CRBasic Editor* pre-compiler, which does not). When a **VarOutOfBound** error is detected at compile time, the CR800 attempts to document which variable is out of bounds at the end of the **CompileResults** message in the **Status** table. For example, the CR800 may detect that **ExArray()** is not large enough and write **Warning:Variable ExArray out of bounds** to the **CompileErrors** register.

The CR800 does not catch all out-of-bounds errors, so take care that all arrays are sized as needed.

10.5.4.8 Watchdog Errors

Watchdog errors indicate the CR800 has crashed and reset itself. A few watchdogs indicate the CR800 is working as designed and are not a concern.

Following are possible root causes sorted in order of most to least probable:

- Transient voltage
- Running the CRBasic program very fast
- Many **PortSet()** instructions back-to-back with no delay
- High-speed serial data on multiple ports with very large data packets or bursts of data

If any of the previous are not the apparent cause, contact a Campbell Scientific application engineer for assistance. Causes that require assistance include the following:

- Memory corruption. Check for memory failures with **M** command in *terminal mode* (p. 475).
- Operating-system problem
- Hardware problem

Watchdog errors may cause telecommunication disruptions, which can make diagnosis and remediation difficult. The CR1000KD Keyboard Display will often work as a user interface when telecommunications fail. Information on CR800 crashes may be found in three places.

- **WatchdogErrors** field in the **Status** *table* (p. 577)
- Watchdog.txt file on the *CPU: drive* (p. 355). Some time may elapse between when the error occurred and the Watchdog.txt file is created. Not all errors cause a file to be created. Any time a watchdog.txt file is created, please consult with a Campbell Scientific application engineer.
- Crash information may be posted at the end of the **CompileResults** register in the **Status** (p. 577) table.

10.5.4.8.1 Status Table WatchdogErrors

Non-zero indicates the CR800 has crashed, which can be caused by power or transient-voltage problems, or an operating-system or hardware problem. If power or transient problems are ruled out, the CR800 probably needs an operating-system update or *repair* (p. 3) by Campbell Scientific.

10.5.4.8.2 Watchdoginfo.txt File

A **WatchdogInfo.txt** file is created on the CPU: drive when the CR800 experiences a software reset (as opposed to a hardware reset that increment the **WatchdogError** register in the **Status** table). Postings of **WatchdogInfo.txt** files are rare. Please consult with a Campbell Scientific application engineer at any occurrence.

Debugging beyond identifying the source of the watchdog is quite involved. Please contact a Campbell Scientific application engineer for assistance. Key things to look for include the following:

- Are multiple tasks waiting for the same resource? This is always caused by a software bug.
- In newer operating systmes, there is information about the memory regions. If anything like **ColorX: fail** is seen**,** this means that the memory is corrupted.
- The comms memory information can also be a clue for PakBus and TCP triggered watchdogs. For example, if COM1 is the source of the watchdog, knowing exactly what is connected to the port and at what baud rate and frequency (how often) the port is communicating are valuable pieces of information.

10.6 Troubleshooting — Operating Systems

Updating the CR800 operating system will sometimes fix a problem. Operating systems are available, free of charge, at *www.campbellsci.com/downloads* (*http://www.campbellsci.com/downloads*).

Operating systems undergo extensive testing prior to release by a professional team of product testers. However, the function of any new component to a data-acquisition system should be thoroughly examined and tested by the integrator and end user.

10.7 Troubleshooting — Auto-Calibration Errors

Related Topics
- *Auto Calibration — Overview* (p. 91)
- *Auto Calibration — Details* (p. 326)
- *Auto-Calibration — Errors* (p. 466)
- *Offset Voltage Compensation* (p. 315)
- *Factory Calibration* (p. 92)
- *Factory Calibration or Repair Procedure* (p. 452)

Auto-calibration errors are rare. When they do occur, the cause is usually an analog input that exceeds the *input limits* (p. 301) of the CR800.

- Check all analog inputs to make sure they are not greater than ±5 Vdc by measuring the voltage between the input and a **G** terminal. Do this with a *multimeter* (p. 494).
- Check for condensation, which can sometimes cause leakage from a 12 Vdc source terminal into other places.
- Check for a lose ground wire on a sensor powered from a **12V** or **SW12** terminal.
- If a multimeter is not available, disconnect sensors, one at a time, that require power from 9 to 16 Vdc. If measurements return to normal, you have found the cause.

10.8 Communications

10.8.1 RS-232

Baud rate mis-match between the CR800 and *datalogger support software* (p. 93) is often the cause of communication problems. By default, CR800 baud rate auto-adjusts to match that of the software. However, settings changed in the CR800 to accommodate a specific RS-232 device, such as a smart sensor, display or modem, may confine the RS-232 port to a single baud rate. If the baud rate can be guessed at and entered into support software parameters, communications may be established. Once communications are established, CR800 baud rate settings can be changed. Clues as to what the baud rate may be set at can be found by analyzing current and previous CR800 programs for the **SerialOpen()** instruction, since **SerialOpen()** specifies a baud rate. Documentation provided by the manufacturer of the previous RS-232 device may also hint at the baud rate.

10.8.2 Communicating with Multiple PCs

The CR800 can communicate with multiple PCs simultaneously. For example, the CR800 may be a node of an internet PakBus network communicating with a distant instance of *LoggerNet*. An onsite technician can communicate with the CR800 using *PC200W* with a serial connection, so long as the PakBus addresses of the host PCs are different. All Campbell Scientific datalogger support software include an option to change PC PakBus addressing.

10.8.3 Comms Memory Errors

CommsMemFree() is an array of three registers in the **Status** *table* (p. 577) that report communication memory errors. In summary, if any **CommsMemFree()** register is at or near zero, assistance may be required from Campbell Scientific to diagnose and correct a potentially serious communication problem. Sections *CommsMemFree(1)* (p. 467), *CommsMemFree(2)* (p. 468), and *CommsMemFree(3)* (p. 469) explain the possible communication memory errors in detail.

10.8.3.1 CommsMemFree(1)

CommsMemFree(1): Number of buffers used in all communication, except with the CR1000KD Keyboard Display. Two digits per each buffer size category. Most significant digits specify the number of larger buffers. Least significant digits specify the number of smaller buffers. When *TLS* (p. 505) is not active, there are four-buffer categories: **tiny**, **little**, **medium**, and **large**. When TLS is active, there is a fifth category, **huge**, and more buffers are allocated for each category.

When a buffer of a certain size is required, the smallest, suitably-sized pool that still has at least one buffer free will allocate a buffer and decrement the number in reserve. When the communication is complete, the buffer is returned to the pool and the number for that size of buffer will increment.

When TLS is active, the number of buffers allocated for **tiny** can only be displayed as the number of tiny buffers modulo divided by 100.

CommsMemFree(1) is encoded using the following expression:

```
CommsMemFree(1) = tiny + lil*100 + mid*10000 + med*1000000 +
lrg*100000000
```

where,

tiny = number of 16-byte packets available

lil = number of little (≈100 bytes) packets

mid = number of medium size (≈530 bytes) packets

med = number of big (≈3 kB) packets

lrg = number of large (≈18 kB) packets available, primarily for TLS.

The following expressions are used to pick the individual values from **CommsMemFree(1)**:

```
tiny = CommsMemFree(1) % 100
lil = (CommsMemFree(1) / 100) % 100
mid = (CommsMemFree(1) / 10000) % 100
```

```
med = (CommsMemFree(1) / 1000000) % 100
lrg = (CommsMemFree(1) / 100000000) % 100
```

Table 125. CommsMemFree(1) Defaults and Use Example, TLS Not Active

Buffer Catagory	***Condition:*** ***reset, TLS not active.*** *Buffer count:* ***CommsMemFree(1) = 15251505.***	***Use Example***	
		Condition: ***in use, TLS not active.*** *Buffer count:* ***CommsMemFree(1) = 13241504.***	***Numbers of buffers in use (reset count – in-use count)***
tiny	05	04	1
little	15	15	0
medium	25	24	1
large	15	13	2
huge			

Table 126. CommsMemFree(1) Defaults and Use Example, TLS Active

Buffer Category	***Condition:*** ***reset, TLS active.*** ***Buffer count:*** ***CommsMemFree(1) = 230999960.***	***Use Example***	
		Condition: ***TLS enabled, no active*** ***TLS connections.*** ***Connected to*** **LoggerNet** ***on TCP/IP.*** ***Buffer Count:*** ***CommsMemFree(1) = 228968437.***	***Numbers of buffers in use (reset count – in-use count)***
tiny	160	137	23
little	99	84	15
medium	99	96	3
large	30	28	2
huge[1]	2	2	0

[1] If email clients using TLS are active, huge will be decremented along with some of the others.

10.8.3.2 CommsMemFree(2)

CommsMemFree(2) displays the number of memory "chunks" in *"keep" memory* *(p. 492)* used by communications. It includes memory used for PakBus routing and neighbor lists, communication timeout structures, and TCP/IP connection structures. The **PakBusNodes** setting, which defaults to **50**, is included in **CommsMemFree(2)**. Doubling **PakBusNodes** to **100** doubles **CommsMemFree(2)** from ≈300 to ≈600 (assuming a large PakBus network has not been just discovered). The larger the discovered PakBus network, and the larger the number of simultaneous TCP connections, the smaller **CommsMemFree(2)** number will be. A **PakBusNodes** setting of 50 is normally

enough, and can probably be reduced in small networks to free memory, if needed. Reducing **PakBusNodes** by one frees 224 bytes. If **CommsMemFree(2)** drops and stays down for no apparent reason (a very rare occurrence), please contact a Campbell Scientific application engineer since the CR800 operating system may need adjustment.

10.8.3.3 CommsMemFree(3)

CommsMemFree(3) Specifies three two-digit fields, from right (least significant) to left (most significant):

- **lilfreeq** = "little" IP packets available
- **bigfreeq** = "big" IP packets available
- **rcvdq** = IP packets in the received queue (not yet processed)

At start up, with no TCP/IP communication occurring, this field will read 1530, which is interpreted as 30 **lilfreeq** and 15 **bigfreeq** available, with no packets in **rcvdq**. The Ethernet and/or the PPP interface feed **rcvdq**. If **CommsMemFree(3)** has a reading of 21428, then two packets are in the received queue, 14 **bigfreeq** packets are free (one in use), and 28 **lilfreeq** are free (two in use). These three pieces of information are also reported in the *IP trace* *(p. 492)* information every 30 seconds as **lilfreeq**, **bigfreeq**, and **recvdq**. If **lilfreeq** or **bigfreeq** free packets drop and stay near zero, or if the number in **rcvdq** climbs and stays high (all are rare occurrences), please contact a Campbell Scientific application engineer as the operating system may need adjustment.

CommsMemFree(3) is encoded as follows:

```
CommsMemFree(3) = lilfreeq + bigfreeq*100 + rcvdq*10000 +
sendq*1000000
```

where,

lilfreeq = number of small TCP packets available

bigfreeq = number of large TCP packets

rcvdq = number of input packets currently waiting to be serviced

sendq = number of output packets waiting to be sent

The following expressions can be used to pick the values out of the **CommsMemFree(3)** variable:

```
lilfreeq = CommsMemFree(3) % 100
bigfreeq = (CommsMemFree(3) / 100) % 100
rcvdq = (CommsMemFree(3) / 10000) % 100
sendq = (CommsmemFree(3) / 1000000) % 100
```

10.9 Troubleshooting — Power Supplies

Related Topics:
- Power Supplies — Specifications
- *Power Supplies — Quickstart* *(p. 44)*
- *Power Supplies — Overview* *(p. 85)*
- *Power Supplies — Details* *(p. 98)*
- *Power Supplies — Products* *(p. 633)*
- *Power Sources* *(p. 99)*
- *Troubleshooting — Power Supplies* *(p. 469)*

10.9.1 Troubleshooting Power Supplies — Overview

Power-supply systems may include batteries, charging regulators, and a primary power source such as solar panels or ac/ac or ac/dc transformers attached to mains power. All components may need to be checked if the power supply is not functioning properly.

The section *Diagnosis and Fix Procedures* (p. 470) includes the following flowcharts for diagnosing or adjusting power equipment supplied by Campbell Scientific:

- Battery-voltage test
- Charging-circuit test (when using an unregulated solar panel)
- Charging-circuit test (when using a transformer)
- Adjusting charging circuit

If power supply components are working properly and the system has peripherals with high current drain, such as a satellite transmitter, verify that the power supply is designed to provide adequate power. Information on power supplies available from Campbell Scientific can be obtained at *www.campbellsci.com*. Basic information is available in the appendix *Power Supplies* (p. 633).

10.9.2 Troubleshooting Power Supplies — Examples -- 8 10 30

Symptom:

- CRBasic program does not execute.
- **Low12VCount** of the **Status** table displays a large number.

Possible affected equipment:

- Batteries
- Charger/regulators
- Solar panels
- Transformers

Likely causes:

- Batteries may need to be replaced or recharged.
- Charger/regulators may need to be fixed or re-calibrated.
- Solar panels or transformers may need to be fixed or replaced.

10.9.3 Troubleshooting Power Supplies — Procedures

Required Equipment:

- Voltmeter
- 5 kΩ resistor
- 50 Ω, 1 watt resistor for the charging circuit tests and to adjust the charging circuit voltage.

10.9.3.1 Battery Test

The procedure outlined in this flow chart tests sealed-rechargeable or alkaline batteries in the PS100 charging regulator, or a sealed-rechargeable battery attached to a CH100 charging regulator. If a need for repair is indicated after

following the procedure, see *Warranty and Assistance* (p. 3) for information on sending items to Campbell Scientific.

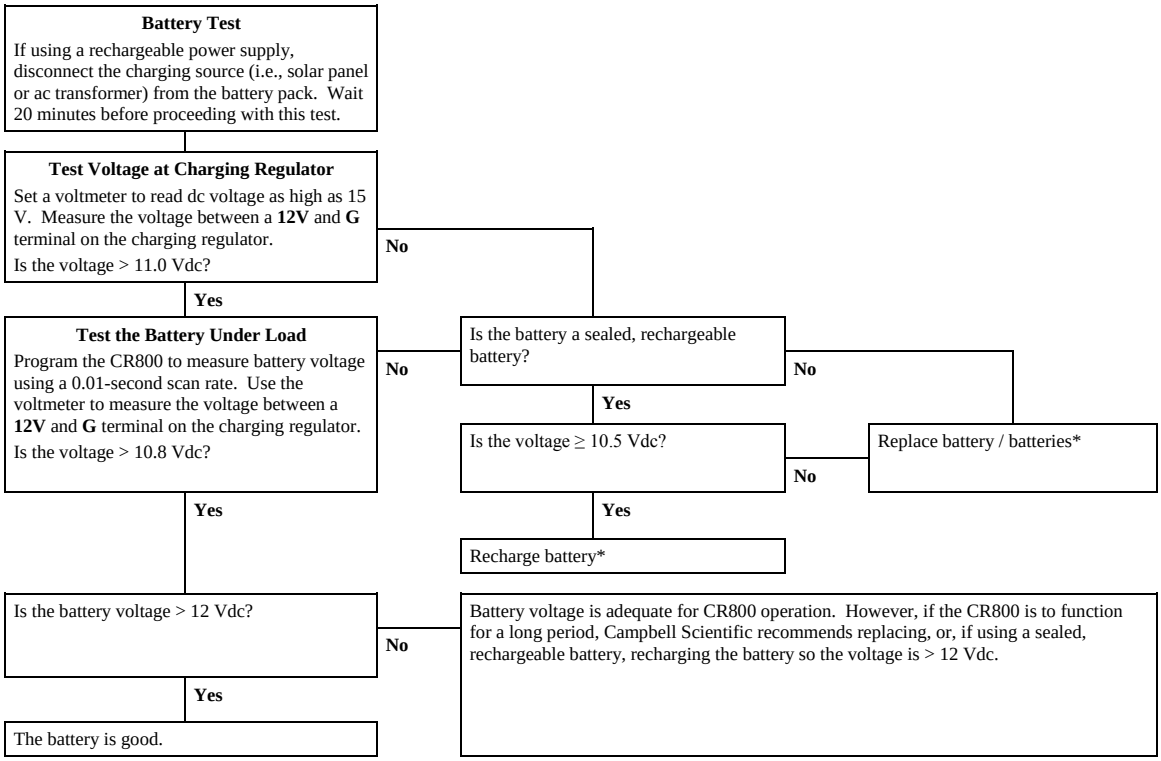

*When using a sealed, rechargeable battery that is recharged with primary power provided by solar panel or ac/ac - ac/dc transformer, testing the charging regulator is recommended. See *Charging Regulator with Solar Panel Test* (p. 471) or *Charging Regulator with Transformer Test* (p. 473).

10.9.3.2 Charging Regulator with Solar-Panel Test

The procedure outlined in this flow chart tests PS100 and CH100 charging regulators that use solar panels as the power source. If a need for repair is indicated after following the procedure, see *Warranty and Assistance* (p. 3) for information on sending items to Campbell Scientific.

Charging Regulator with Solar-Panel Test

Disconnect any wires attached to the **12V** and **G** (ground) terminals on the PS100 or CH100 charging regulator. Unplug any batteries. Connect the solar panel to the two **CHG** terminals. Polarity of inputs does not matter. Only the solar panel should be connected. Set the charging-regulator power switch to **OFF**.

NOTE *This test assumes the solar panel has an unregulated output.*

Solar Panel Test

Set a voltmeter to measure dc voltage. Measure solar panel output across the two solar-panel leads by placing a voltmeter lead on one **CHG** terminal, and the other lead on the other **CHG** terminal. Is the output 17 to 22 Vdc?

No → Remove the solar-panel leads from the charging circuit. Measure solar-panel output across the two leads. Is the output > 0 Vdc?

No → The solar panel is damaged and should be repaired or replaced.

Yes → Is the voltage ≥ 17 Vdc?

No → There may not be enough sunlight to perform the test, or the solar panel is damaged.

Yes → Reconnect the power source (transformer / solar panel) to the **CHG** terminals on the charging regulator. Measure the voltage between the two **CHG** terminals. Is the voltage ≥ 17 Vdc / Vac?

Yes → **5 kΩ Load Test**

1) Place a 5 kΩ resistor between a **12V** terminal and a **G** (ground) terminal on the charging regulator.
2) Switch the power switch to **ON**.
3) Measure the dc voltage across the resistor.

Is the measured voltage 13.3 to 14.1 V?

No → Measure the voltage between the two pins in a battery-connection receptacle. Is the voltage 10.0 to 15.5 Vdc?

No → **Get Repair Authorization**

The charging regulator is damaged and should be repaired or replaced.

Yes → See *Adjusting Charging Voltage* ***(p. 474)*** to calibrate the charging regulator, or return the charging regulator to Campbell Scientific for calibration.

Yes → **50 Ω Load Test**

1) Switch the power switch to **OFF**.
2) Disconnect the power source (transformer / solar panel).
3) Remove the 5 kΩ resistor
4) Place a 50 Ω, 1 W resistor between a **12V** terminal and a **G** (ground) terminal on the charging regulator.
5) Reconnect the power source and then switch the power switch to **ON**.
7) Measure the voltage across the ends of the resistor.

Is the voltage 13.0 to 14.0 Vdc (13.3 if circuit just adjusted)?

8) Switch the power switch to **OFF**.

NOTE *The resistor will get HOT in just a few seconds. After measuring the voltage, switch the power switch to* **OFF** *and allow the resistor to cool before removing it.*

No → With the charging regulator still under load, measure the voltage between the two **CHG** terminals. Is the voltage > 15.5 Vdc?

Yes → **Get Repair Authorization**

The charging regulator is damaged and should be repaired or replaced.

No → There may not be enough sunlight to perform the test.

Yes → **Test Completed**

The charger is functioning properly. Remove the 50 Ω resistor.

10.9.3.3 Charging Regulator with Transformer Test

The procedure outlined in this flow chart tests PS100 and CH100 charging regulators that use ac/ac or ac/dc transformers as power source. If a need for repair is indicated after following the procedure, see *Warranty and Assistance* (p. 3) for information on sending items to Campbell Scientific.

Charging Regulator with ac or dc Transformer Test

Disconnect any wires attached to the 12V and G (ground) terminals on the PS100 or CH100 charging regulator. Unplug any batteries. Connect the power input ac or dc transformer to the two CHG terminals. Polarity of the inputs does not matter. Only the transformer should be connected. Set the charging-regulator power switch to OFF. Connect the transformer to mains power.

Transformer Test

Determine whether the transformer output is ac or dc voltage (labeling on the transformer usually identifies the output voltage type). Set a voltmeter to read that type of voltage. Measure transformer output across the two transformer leads by placing a voltmeter lead on one **CHG** terminal, and the other lead on the other **CHG** terminal. Is the output 17 to 22 volts?

No

Taking care not to short the transformer leads, remove the leads from the charging regulator. Measure transformer output across the two leads. Is the output 17 to 22 Vac / Vdc?

No

The transformer is damaged and should be replaced.

Yes

Yes

Reconnect the power source (transformer / solar panel) to the **CHG** terminals on the charging regulator. Measure the voltage between the two **CHG** terminals. Is the voltage ≥ 17 Vdc / Vac?

No

Yes

5 kΩ Load Test

1) Place a 5 kΩ resistor between a **12V** terminal and a **G** (ground) terminal on the charging regulator.

2) Switch the power switch to **ON**.

3) Measure the dc voltage across the resistor.

Is the measured voltage 13.3 to 14.1 V?

No

Measure the voltage between the two pins in a battery-connection receptacle. Is the voltage 10.0 to 15.5 Vdc?

No

Yes

Yes

See *Adjusting Charging Voltage* (p. 474) to calibrate the charging regulator, or return the charging regulator to Campbell Scientific for calibration.

50 Ω Load Test

1) Switch the power switch to **OFF**.

2) Disconnect the power source (transformer / solar panel).

3) Remove the 5 kΩ resistor

4) Place a 50 Ω, 1 W resistor between a **12V** terminal and a **G** (ground) terminal on the charging regulator.

5) Reconnect the power source and then switch the power switch to **ON**.

7) Measure the voltage across the ends of the resistor.

Is the voltage 13.0 to 14.0 Vdc (13.3 if circuit just adjusted)?

8) Switch the power switch to **OFF**.

NOTE *The resistor will get HOT in just a few seconds. After measuring the voltage, switch the power switch to* **OFF** *and allow the resistor to cool before removing it.*

No

Get Repair Authorization

The charging regulator is damaged and should be repaired or replaced.

Yes

Test Completed

The charger is functioning properly. Remove the 50 Ω resistor.

10.9.3.4 Adjusting Charging Voltage

Note Campbell Scientific recommends that a qualified electronic technician perform the following procedure.

The procedure outlined in this flow chart tests and adjusts PS100 and CH100 charging regulators. If a need for repair or calibration is indicated after following the procedure, see *Warranty and Assistance* (p. 3) for information on sending items to Campbell Scientific.

Adjusting Charging Circuit

1) Place a 5 kΩ resistor between a **12V** terminal and a **G** (ground) ground terminal on the charging regulator. Use a voltmeter to measure the voltage across the 5 kΩ resistor.

2) Connect a power source that supplies a voltage >17 V to the input **CHG** terminals of the charging regulator.

3) Adjust pot R3 (see *FIGURE. Potentiometer R3 on PS100 and CH100 Charging Regulators* (p. 475)) so that voltage across the 5 kΩ resistor is 13.3 Vdc.

Can the output voltage be set to 13.3 V?

No → **Get Repair Authorization**

The charging regulator is damaged and should be repaired or replaced.

Yes ↓

50 Ω Load Test

1) Switch the power switch to **OFF**.

2) Disconnect the power source (transformer / solar panel).

3) Remove the 5 kΩ resistor

4) Place a 50 Ω, 1 W resistor between a **12V** terminal and a **G** (ground) terminal on the charging regulator.

5) Reconnect the power source and then switch the power switch to **ON**.

7) Measure the voltage across the ends of the resistor.

Is the voltage 13.0 to 14.0 Vdc (13.3 if circuit just adjusted)?

8) Switch the power switch to **OFF**.

NOTE *The resistor will get HOT in just a few seconds. After measuring the voltage, switch the power switch to* **OFF** *and allow the resistor to cool before removing it.*

No → **Get Repair Authorization**

Yes ↓

Test Completed

The charger is functioning properly. Remove the 50 Ω resistor.

Figure 125. Potentiometer R3 on PS100 and CH100 Charger / Regulator

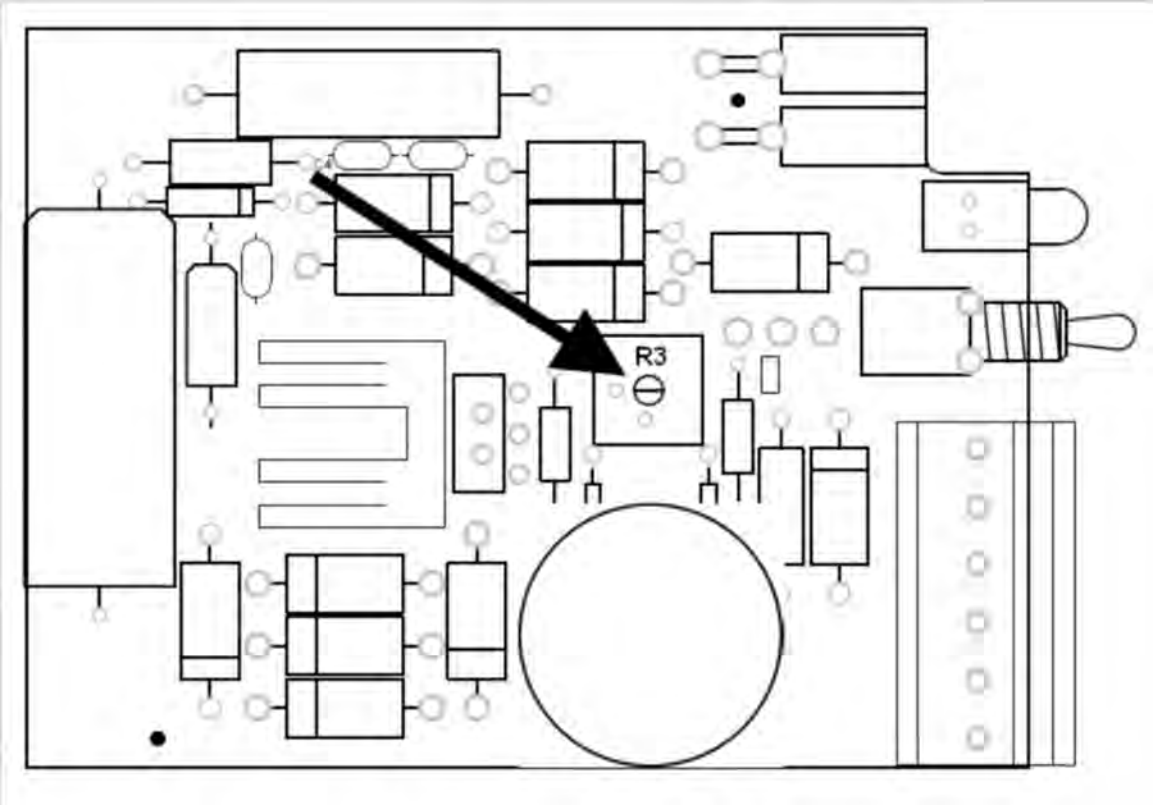

10.10 Terminal Mode

Table *CR800 Terminal Commands* (p. 476) lists terminal mode options. With exception of perhaps the **C** command, terminal options are not necessary to routine CR800 operations.

To enter terminal mode, connect a PC to the CR800 with the same hard-wire serial connection used in the *What You Will Need* (p. 46) section. Open a terminal emulator program. Terminal emulator programs are available in:

- Campbell Scientific *datalogger support software* (p. 93) *Terminal Emulator* (p. 504) window
- *DevConfig* (Campbell Scientific *Device Configuration Utility Software*) **Terminal** tab
- HyperTerminal. Beginning with Windows Vista, HyperTerminal (or another terminal emulator utility) must be acquired and installed separately.

As shown in figure *DevConfig Terminal Tab* (p. 477), after entering a terminal emulator, press **Enter** a few times until the prompt **CR800**> is returned. Terminal commands consist of a single character and **Enter**. Sending an **H** and **Enter** will return the terminal emulator menu.

ESC or a 40 second timeout will terminate on-going commands. Concurrent terminal sessions are not allowed and will result in dropped communications.

Table 127. CR800 Terminal Commands

Option	Description	Use
0	Scan processing time; real time in seconds	Lists technical data concerning program scans.
1	Serial FLASH data dump	Campbell Scientific engineering tool
2	Read clock chip	Lists binary data concerning the CR800 clock chip.
3	Status	Lists the CR800 **Status** table.
4	Card status and compile errors	Lists technical data concerning an installed CF card.
5	Scan information	Technical data regarding the CR800 scan.
6	Raw A-to-D values	Technical data regarding analog-to-digital conversions.
7	VARS	Lists **Public** table variables.
8	Suspend / start data output	Outputs all table data. This is not recommended as a means to collect data, especially over telecommunications. Data are dumped as non-error checked ASCII.
9	Read inloc binary	Lists binary form of **Public** table.
A	Operating system copyright	Lists copyright notice and version of operating system.
B	Task sequencer op codes	Technical data regarding the task sequencer.
C	Modify constant table	Edit constants defined with **ConstTable** / **EndConstTable**. Only active when **ConstTable** / **EndConstTable** in the active program.
D	MTdbg() task monitor	Campbell Scientific engineering tool
E	Compile errors	Lists compile errors for the current program download attempt.
F	VARS without names	Campbell Scientific engineering tool
G	CPU serial flash dump	Campbell Scientific engineering tool
H	Terminal emulator menu	Lists main menu.
I	Calibration data	Lists gains and offsets resulting from internal calibration of analog measurement circuitry.
J	Download file dump	Sends text of current program including comments.
K	Unused	
L	Peripheral bus read	Campbell Scientific engineering tool
M	Memory check	Lists memory-test results
N	File system information	Lists files in CR800 memory.
O	Data table sizes	Lists technical data concerning data-table sizes.
P	Serial talk through	Issue commands from keyboard that are passed through the logger serial port to the connected device. Similar in concept to SDI12 Talk Through.
REBOOT	Program recompile	Typing “REBOOT” rapidly will recompile the CR800 program immediately after the last letter, "T", is entered. Table memory is retained. **NOTE** When typing **REBOOT**, characters are not echoed (printed on terminal screen).

Table 127. CR800 Terminal Commands

Option	Description	Use
SDI12	SDI12 talk through	Issue commands from keyboard that are passed through the CR800 SDI-12 port to the connected device. Similar in concept to Serial Talk Through.
T	Unused	
U	Data recovery	Provides the means by which data lost when a new program is loaded may be recovered. See section *Troubleshooting — Data Recovery* (p. 478) for details.
V	Low level memory dump	Campbell Scientific engineering tool
W	Comms Watch	Enables monitoring of CR800 communication traffic.
X	Peripheral bus module identify	Campbell Scientific engineering tool

Figure 126. DevConfig **Terminal** *Tab*

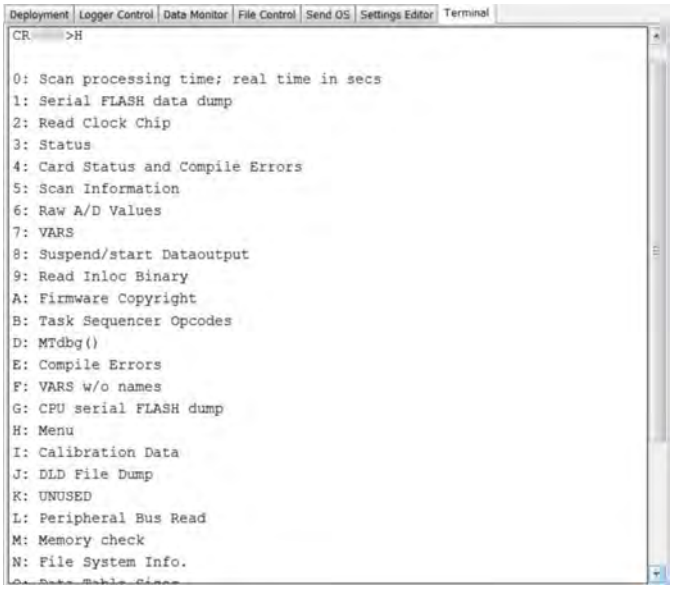

10.10.1 Serial Talk Through and Comms Watch

In the **P: Serial Talk Through** and **W: Comms Watch** modes, the timeout can be changed from the default of 40 seconds to any value ranging from 1 to 86400 seconds (86400 seconds = 1 day).

When using options **P** or **W** in a terminal session, consider the following:

- Concurrent terminal sessions are not allowed by the CR800.
- Opening a new terminal session will close the current terminal session.
- The CR800 will attempt to enter a terminal session when it receives non-PakBus characters on the nine-pin **RS-232** port or **CS I/O** port, unless the port is first opened with the **SerialOpen()** command.

If the CR800 attempts to enter a terminal session on the nine-pin **RS-232** port or **CS I/O** port because of an incoming non-PakBus character, and that port was not opened using the **SerialOpen()** command, any currently running terminal

function, including the comms watch, will immediately stop. So, in programs that frequently open and close a serial port, the probability is higher that a non-PakBus character will arrive at the closed serial port, thus closing an existing talk-through or comms watch session. If this occurs, the **FileManager()** setting to send comms watch or sniffer to a file is immune to this problem.

10.11 Logs

Logs are meta data, usually about datalogger or software function. Logs, when enabled, are available at the locations listed in the following table.

Table 128. Log Locations

Software Package	*Usual Location of Logs*
LoggerNet	C:\Campbellsci\LoggerNet\Logs
PC400	C:\Campbellsci\PC400\Logs
DevConfig	C:\Campbellsci\DevConfig\sys\cora\Logs

10.12 Troubleshooting — Data Recovery

In rare circumstances, exceptional efforts may be required to recover data that are otherwise lost to conventional data-collection methods. Circumstances may include the following:

- Program control error
  - A CRBasic program was sent to the CR800 without specifying that it run on power-up. This is most likely to occur only while using the **Compile, Save and Send** feature of older versions of *CRBasic Editor*.
  - A new program (even the same program) was inadvertently sent to the CR800 through the *Connect* client or *Set Up* client in *LoggerNet*.
  - The program was stopped through datalogger support software **File Control** or *LoggerLink* software.
- The CPU: drive was inadvertently formated.
- A network peripheral (NL115, NL120, NL200, or NL240) was added to the CR800 when there was previously no network peripheral, and so forced the CR800 to reallocate memory.
- A hardware failure, such as memory corruption, occurred.
- Inserting or removing memory cards will generally do nothing to cause the CR800 to miss data. These events affect table definitions because they can affect table size allocations, but they will not create a situation where data recovery is necessary.

Data can usually be recovered using the **Datalogger Data Recovery** wizard available in *DevConfig* (p. 109). Recovery is possible because data in memory is not usually destroyed, only lost track of. So, the wizard recovers "data" from the entire memory, whether or not that memory has been written to, or written to recently.

Once you have run through the recovery procedure, consider the following:

If a CRD: drive (memory card) or a USB: drive (Campbell Scientific mass storage device) has been removed since the data was originally stored, then the **Datalogger Data Recovery** is run, the memory pointer will likely be in the wrong

location, so the recovered data will be corrupted. If this is the case, put the CRD: or USB: drive back in place and re-run the **Datalogger Data Recovery** wizard before restarting the CRBasic program.

In any case, even when the recovery runs properly, the result will be that good data is recovered mixed with sections of empty or old junk. With the entire data dump in one file, you can sort through the good and the bad.

11. Glossary

11.1 Terms

Term. ac

See *Vac* (p. 506).

Term. accuracy

A measure of the correctness of a measurement. See also the appendix *Accuracy, Precision, and Resolution* (p. 507).

Term. A-to-D

Analog-to-digital conversion. The process that translates analog voltage levels to digital values.

Term. amperes (A)

Base unit for electric current. Used to quantify the capacity of a power source or the requirements of a power-consuming device.

Term. analog

Data presented as continuously variable electrical signals.

Term. argument

Parameter (p. 496): part of a procedure (or command) definition.

Argument (p. 481): part of a procedure call (or command execution). An argument is placed in a parameter. For example, in the CRBasic command **Battery(*dest*)**, ***dest*** is a parameter that defines what argument is to be put in its place in a CRBasic program. If a variable named ***BattV*** is to hold the result of the battery measurement made by **Battery()**, ***BattV*** is the argument placed in ***dest***. In the statement

```
Battery(BattV)
```

BattV is the argument.

Term. ASCII / ANSI

Reading List:
- *Term. ASCII / ANSI* (p. 481)
- *ASCII / ANSI table* (p. 613)

Abbreviation for American Standard Code for Information Interchange / American National Standards Institute. An encoding scheme in which numbers from 0-127 (ASCII) or 0-255 (ANSI) are used to represent pre-defined alphanumeric characters. Each number is usually stored and transmitted as 8 binary digits (8 bits), resulting in 1 byte of storage per character of text.

Term. asynchronous

The transmission of data between a transmitting and a receiving device occurs as a series of zeros and ones. For the data to be "read" correctly, the receiving device must begin reading at the proper point in the series. In asynchronous communication, this coordination is accomplished by having each character surrounded by one or more start and stop bits which designate the beginning and ending points of the information (see *synchronous* (p. 504)).

Indicates the sending and receiving devices are not synchronized using a clock signal.

Term. AWG

AWG ("gauge") is the accepted unit when identifying wire diameters. Larger AWG values indicate smaller cross-sectional diameter wires. Smaller AWG values indicate large-diameter wires. For example, a 14 AWG wire is often used for grounding because it can carry large currents. 22 AWG wire is often used as sensor leads since only small currents are carried when measurements are made.

Term. baud rate

The rate at which data are transmitted.

Term. beacon

A signal broadcasted to other devices in a PakBus® network to identify "neighbor" devices. A beacon in a PakBus network ensures that all devices in the network are aware of other devices that are viable. If configured to do so, a clock-set command may be transmitted with the beacon. This function can be used to synchronize the clocks of devices within the PakBus network. See also *PakBus* (p. 496) and *neighbor device* (p. 494).

Term. binary

Describes data represented by a series of zeros and ones. Also describes the state of a switch, either being on or off.

Term. BOOL8

A one-byte data type that holds eight bits (0 or 1) of information. BOOL8 uses less space than the 32 bit BOOLEAN data type.

Term. boolean

Name given a function, the result of which is either true or false.

Term. boolean data type

Typically used for flags and to represent conditions or hardware that have only two states (true or false) such as flags and control ports.

Term. burst

Refers to a burst of measurements. Analogous to a burst of light, a burst of measurements is intense, such that it features a series of measurements in rapid succession, and is not continuous.

Term. calibration wizard

The calibration wizard facilitates the use of the CRBasic field calibration instructions **FieldCal()** and **FieldCalStrain()**. It is found in *LoggerNet* (4.0 or higher) or *RTDAQ*.

Term. Callback

A name given to the process by which the CR800 initiates telecommunication with a PC running appropriate Campbell Scientific *datalogger support software* (p. 631). Also known as "Initiate Telecommunications."

Term. CD100

An optional enclosure mounted keyboard display for use with CR800 dataloggers. See the appendix *Keyboard Display — List* (p. 627).

Term. CDM/CPI

CPI is a proprietary interface for communications between Campbell Scientific dataloggers and Campbell Scientific CDM peripheral devices. It consists of a physical layer definition and a data protocol. CDM devices are similar to Campbell Scientific SDM devices in concept, but the use of the CPI bus enables higher data-throughput rates and use of longer cables. CDM devices require more power to operate in general than do SDM devices.

Term. code

A CRBasic program, or a portion of a program.

Term. Collect / Collect Now button

Button or command in datalogger support software that facilitates collection-on-demand of final-data memory. This feature is found in *PC200W*, *PC400*, *LoggerNet*, and *RTDAQ*. software.

Term. COM port

COM is a generic name given to physical and virtual serial communication ports.

Term. input/output instructions

Usually refers to a CRBasic command.

Term. command line

One line in a CRBasic program. Maximum length, even with the line continuation characters <space> <underscore> (_), is 512 characters. A

command line usually consists of one program statement, but it may consist of mulitple program statements separated by a <colon> (:).

Term. compile

The software process of converting human-readable program code to binary machine code. CR800 user programs are compiled internally by the CR800 operating system.

Term. conditioned output

The output of a sensor after scaling factors are applied. See *unconditioned output* (p. 505).

Term. connector

A connector is a device that allows one or more electron conduits (wires, traces, leads, etc) to be connected or disconnected as a group. A connector consists of two parts — male and female. For example, a common household ac power receptacle is the female portion of a connector. The plug at the end of a lamp power cord is the male portion of the connector. See *terminal* (p. 504).

Term. constant

A packet of CR800 memory given an alpha-numeric name and assigned a fixed number.

Term. control I/O

C terminals configured for controlling or monitoring a device.

Term. CoraScript

CoraScript is a command-line interpreter associated with *LoggerNet* datalogger support software. Refer to the *LoggerNet* manual, available at *www.campbellsci.com*, for more information.

Term. CPU

Central processing unit. The brains of the CR800. Also refers to two the following two memory areas:

- CPU: memory drive
- Memory used by the CPU to store table data.

Term. CR1000KD

An optional hand-held keyboard display for use with the CR800 datalogger. See the appendix *Keyboard Display -- List* (p. 627).

Term. cr

Carriage return

Term. CRBasic Editor Compile, Save and Send

CRBasic Editor menu command that compiles, saves, and sends the program to the datalogger.

Term. CS I/O

Campbell Scientific proprietary input / output port. Also, the proprietary serial communication protocol that occurs over the **CS I/O** port.

Term. CVI

Communication verification interval. The interval at which a PakBus® device verifies the accessibility of neighbors in its neighbor list. If a neighbor does not communicate for a period of time equal to 2.5 times the CVI, the device will send up to four **Hello**s. If no response is received, the neighbor is removed from the neighbor list. See the section *PakBus — Overview* (p. 88) for more information.

Term. data cache

The data cache is a set of binary files kept on the hard disk of the computer running the *datalogger support software* (p. 485). A binary file is created for each table in each datalogger. These files mimic the storage areas in datalogger memory, and by default are two times the size of the datalogger storage area. When the software collects data from a CR800, the data are stored in the binary file for that CR800. Various software functions retrieve data from the data cache instead of the CR800 directly. This allows the simultaneous sharing of data among software functions.

Similar in function to a CR800 final-memory data tables, the binary files for the data cache are set up by default as *ring memory* (p. 499).

Term. datalogger support software

Campbell Scientific software that includes at least the following functions:

- Datalogger telecommunications
- Downloading programs
- Clock setting
- Retrieval of measurement data

See *Datalogger Support Software — Overview* (p. 93) and the appendix *Datalogger Support Software — List* (p. 631) for more information.

Term. data point

A data value which is sent to *final-data memory* (p. 489) as the result of a *data-output processing instruction* (p. 486). Strings of data points output at the same time make up a record in a data table.

Term. data table

A concept that describes how data are organized in CR800 memory, or in files that result from collecting data in CR800 memory. The fundamental data table is created by the CRBasic program as a result of the **DataTable()**

instruction and resides in binary form in main-memory SRAM. See the table *CR800 Memory Allocation* (p. 352). The data table structure also resides in the *data cache* (p. 485), in discrete data files on the CPU:, USR:, CRD:, and USB: memory drives, and in binary or ASCII files that result from collecting final-data memory with *datalogger support software* (p. 485).

Term. data-output interval

Alias: output interval

The interval between each write of a *record* (p. 498) to a final-data memory data table.

Term. data-output-processing instructions

CRBasic instructions that process data values for eventual output to final-data memory. Examples of output-processing instructions include **Totalize()**, **Maximize()**, **Minimize()**, and **Average()**. Data sources for these instructions are values or strings in variable memory. The results of intermediate calculations are stored in *data-output-processing memory* (p. 486) to await the output trigger. The ultimate destination of data generated by data-output-processing instructions is usually final-data memory, but it may be diverted to variable memory by the CRBasic program for further processing. The transfer of processed summaries to final-data memory takes place when the ***Trigger*** argument in the **DataTable()** instruction is set to **True**.

Term. data-output-processing memory

SRAM memory automatically allocated for intermediate calculations performed by CRBasic data-output-processing instructions. Data-output-processing memory cannot be monitored. See section *Processing for Output to Final-Data Memory* (p. 516) for a list of instructions that use Data-output-processing memory.

Term. dc

See *Vdc* (p. 506).

Term. DCE

Data **C**ommunication **E**quipment. While the term has much wider meaning, in the limited context of practical use with the CR800, it denotes the pin configuration, gender, and function of an RS-232 port. The RS-232 port on the CR800 is DCE. Interfacing a DCE device to a DCE device requires a null-modem cable. See *Term. DTE* (p. 487).

Term. desiccant

A hygroscopic material that absorbs water vapor from the surrounding air. When placed in a sealed enclosure, such as a datalogger enclosure, it prevents condensation.

Term. DevConfig software

Device Configuration Utility (p. 109), available with *LoggerNet*, *RTDAQ*, *PC400*, or at *www.campbellsci.com/downloads* (*http://www.campbellsci.com/downloads*).

Term. DHCP

Dynamic Host Configuration Protocol. A TCP/IP application protocol.

Term. differential

A sensor or measurement terminal wherein the analog voltage signal is carried on two leads. The phenomenon measured is proportional to the difference in voltage between the two leads.

Term. Dim

A CRBasic command for declaring and dimensioning variables. Variables declared with **Dim** remain hidden during datalogger operations.

Term. dimension

Verb. To code a CRBasic program for a variable array as shown in the following examples:

- **DIM *example(3)*** creates the three variables ***example(1)***, ***example(2)***, and ***example(3)***.
- **DIM *example(3,3)*** creates nine variables.
- **DIM *example(3,3,3)*** creates 27 variables.

Term. DNS

Domain name system. A TCP/IP application protocol.

Term. DTE

Data **T**erminal **E**quipment. While the term has much wider meaning, in the limited context of practical use with the CR800, it denotes the pin configuration, gender, and function of an RS-232 port. The RS-232 port on the CR800 is DCE. Attachment of a null-modem cable to a DCE device effectively converts it to a DTE device. See *Term. DCE* (p. 486).

Term. duplex

A serial communication protocol. Serial communications can be simplex, half-duplex, or full-duplex.

Reading list: *simplex* (p. 501), *duplex* (p. 241), *half-duplex* (p. 490), and *full-duplex* (p. 490).

Term. duty cycle

The percentage of available time a feature is in an active state. For example, if the CR800 is programmed with 1 second scan interval, but the program completes after only 100 millisecond, the program can be said to have a 10% duty cycle.

Term. earth ground

A grounding rod or other suitable device that electrically ties a system or device to the earth. Earth ground is a sink for electrical transients and possibly damaging potentials, such as those produced by a nearby lightning strike. Earth ground is the preferred reference potential for analog voltage measurements. Note that most objects have a "an electrical potential" and the potential at different places on the earth — even a few meters away — may be different.

Term. engineering units

Units that explicitly describe phenomena, as opposed to, for example, the CR800 base analog-measurement unit of milliVolts.

Term. ESD

Electrostatic discharge

Term. ESS

Environmental Sensor Station

Term. excitation

Application of a precise voltage, usually to a resistive bridge circuit.

Term. execution interval

See *scan interval* *(p. 500)*.

Term. execution time

Time required to execute an instruction or group of instructions. If the execution time of a program exceeds the **Scan()** ***Interval***, the program is executed less frequently than programmed and the **Status** table **SkippedScan** *(p. 463)* register will increment.

Term. expression

A series of words, operators, or numbers that produce a value or result.

Term. FFT

Fast **F**ourier **T**ransform. A technique for analyzing frequency-spectrum data.

Term. File Control

File Control is a feature of *LoggerNet, PC400 and RTDAQ* *(p. 93)* datalogger support software. It provides a view of the CR800 file system and a menu of file management commands:

Delete facilitates deletion of a specified file

Send facilitates transfer of a file (typically a CRBasic program file) from PC memory to CR800 memory.

Retrieve facilitates collection of files viewed in **File Control**. *If collecting a data file from a CF card with* **Retrieve**, *first stop the CR800 program or data corruption may result.*

Format formats the selected CR800 memory device. All files, including data, on the device will be erased.

Term. File Retrieval tab

A feature of *LoggerNet Setup Screen*. In the *Setup Screen* network map (Entire Network), click on a CR800 datalogger node. The **File Retieval** tab should be one of several tabs presented at the right of the screen.

Term. fill and stop memory

A memory configuration for data tables forcing a data table to stop accepting data when full.

Term. final-data memory

The portion of CR800 SRAM memory allocated for storing data tables with output arrays. Once data are written to final-data memory, they cannot be changed but only overwritten when they become the oldest data. Final-data memory is configured as *ring memory* (p. 499) by default, with new data overwriting the oldest data.

Term. final-memory data

Data that resides in final-data memory.

Term. Flash

A type of memory media that does not require battery backup. Flash memory, however, has a lifetime based on the number of writes to it. The more frequently data are written, the shorter the life expectancy.

Term. FLOAT

Four-byte floating-point data type. Default CR800 data type for **Public** or **Dim** variables. Same format as IEEE4.

Term. fN1

fN1 or F_{notch}. First notch frequency. A notch, when referring to digital signal processing (DSP), is a region in the frequency response at which frequencies input into the filter are highly attenuated or 'notched out.' Signals input into the filter at fN1 are completely eliminated, whereas frequencies near the notch are greatly attenuated but not completely filtered out. A more technical term is *transmission zero*,or zero signal transmission through the filter at the given frequency.

Term. FP2

Two-byte floating-point data type. Default CR800 data type for stored data. While IEEE four-byte floating point is used for variables and internal calculations, FP2 is adequate for most stored data. FP2 provides three or four significant digits of resolution, and requires half the memory as IEEE4.

Term. FTP

File Transfer Protocol. A TCP/IP application protocol.

Term. full-duplex

A serial communication protocol. Simultaneous bi-directional communications. Communications between a CR800 serial port and a PC is typically full duplex.

Reading list: *simplex* (p. 501), *duplex* (p. 241), *half-duplex* (p. 490), and *full-duplex* (p. 490).

Term. frequency domain

Frequency domain describes data graphed on an X-Y plot with frequency as the X axis. *Vspect* (p. 506) vibrating-wire data are in the frequency domain.

Term. frequency response

Sample rate is how often an instrument reports a result at its output; frequency response is how well an instrument responds to fast fluctuations on its input. By way of example, sampling a large gage thermocouple at 1 kHz will give a high sample rate but does not ensure the measurement has a high frequency response. A fine-wire thermocouple, which changes output quickly with changes in temperature, is more likely to have a high frequency response.

Term. garbage

The refuse of the data communication world. When data are sent or received incorrectly (there are numerous reasons why this happens), a string of invalid, meaningless characters (garbage) often results. Two common causes are: 1) a baud-rate mismatch and 2) synchronous data being sent to an asynchronous device and vice versa.

Term. global variable

A variable available for use throughout a CRBasic program. The term is usually used in connection with subroutines, differentiating global variables (those declared using **Public** or **Dim**) from local variables, which are declared in the **Sub()** and **Function()** instructions.

Term. ground

Being or related to an electrical potential of 0 volts.

Term. half-duplex

A serial communication protocol. Bi-directional, but not simultaneous, communications. SDI-12 is a half-duplex protocol.

Reading list: *simplex* (p. 501), *duplex* (p. 241), *half-duplex* (p. 490), and *full-duplex* (p. 490).

Term. handshake, handshaking

The exchange of predetermined information between two devices to assure each that it is connected to the other. When not used as a clock line, the CLK/HS (pin 7) line in the datalogger **CS I/O** port is primarily used to detect the presence or absence of peripherals.

Term. hello exchange

The process of verifying a node as a neighbor. See section *PakBus — Overview* *(p. 88).*

Term. hertz (Hz)

SI unit of frequency. Cycles or pulses per second.

Term. HTML

Hyper**t**ext **M**arkup **L**anguage. Programming language used for the creation of web pages.

Term. HTTP

Hypertext Transfer Protocol. A TCP/IP application protocol.

Term. IEEE4

Four-byte, floating-point data type. IEEE Standard 754. Same format as **Float**.

Term. Include file

a file containing CRBasic code to be included at the end of the current CRBasic program, or it can be run as the default program. See **Include File Name** *setting* *(p. 577).*

Term. INF

A data word indicating the result of a function is infinite or undefined.

Term. initiate telecommunication

A name given to a processes by which the CR800 initiates telecommunications with a PC running *LoggerNet*. Also known as **Callback** *(p. 483).*

Term. input/output instructions

Used to initiate measurements and store the results in input storage or to set or read control/logic ports.

Term. input/output instructions

Usually refers to a CRBasic command.

Term. integer

A number written without a fractional or decimal component. 15 and 7956 are integers; 1.5 and 79.56 are not.

Term. intermediate memory

See *data-output-processing memory* (p. 486).

Term. IP

Internet Protocol. A TCP/IP internet protocol.

Term. IP address

A unique address for a device on the internet.

Term. IP trace

Function associated with IP data transmissions. IP trace information was originally accessed through the CRBasic instruction **IPTrace()** (p. 282) and stored in a string variable. **Files Manager** *setting* (p. 577) is now modified to allow for creation of a file on a CR800 memory drive, such as USR:, to store information in ring memory.

Term. isolation

Hardwire telecommunication devices and cables can serve as alternate paths to earth ground and entry points into the CR800 for electromagnetic noise. Alternate paths to ground and electromagnetic noise can cause measurement errors. Using opto-couplers in a connecting device allows telecommunication signals to pass, but breaks alternate ground paths and may filter some electromagnetic noise. Campbell Scientific offers optically isolated RS-232 to CS I/O interfaces as a CR800 accessory for use on the **CS I/O** port. See the appendix *Serial I/O Modules List* (p. 622).

Term. JSON

Java **S**cript **O**bject **N**otation. A data file format available through the CR800 or *LoggerNet*.

Term. KEEP memory

Non-volatile memory that preserves some *registers* (p. 577) through a CR800 reset that occurs due to power-up and program start-up. Examples include PakBus address, station name, beacon intervals, neighbor lists, routing table, and communication timeouts.

Term. keyboard display

The CR850 (a version of the CR800) has an integrated keyboard display. See appendix *Keyboard Display — List* (p. 627) for other compatible keyboard displays.

Term. leaf node

A PakBus node at the end of a branch. When in this mode, the CR800 is not able to forward packets from one of its communication ports to another. It will not maintain a list of neighbors, but it still communicates with other PakBus dataloggers and wireless sensors. It cannot be used as a means of reaching (routing to) other dataloggers.

Term. lf

Line **f**eed. Often associated with carriage return (<cr>). **<cr><lf>**.

Term. local variable

A variable available for use only by the subroutine in which it is declared. The term differentiates local variables, which are declared in the **Sub()** and **Function()** instructions, from global variables, which are declared using **Public** or **Dim**.

Term. LONG

Data type used when declaring integers.

Term. loop

A series of instructions in a CRBasic program that are repeated a the programmed number of times. The loop ends with an **end** instruction.

Term. loop counter

Increments by one with each pass through a loop.

Term. mains power

the national power grid

Term. manually initiated

Initiated by the user, usually with a *CR1000KD Keyboard Display* *(p. 627),* as opposed to occurring under program control.

Term. mass storage device

USB: "thumb" drive. See appendix *Data Storage Devices* *(p. 629).*

Term. MD5 digest

16 byte checksum of the TCP/IP VTP configuration.

Term. milli

The SI prefix denoting 1/1000 of a base SI unit.

Term. Modbus

Communication protocol published by Modicon in 1979 for use in programmable logic controllers (PLCs). See section *Modbus* *(p. 89).*

Term. modem/terminal

Any device that has the following:

- Ability to raise the CR800 ring line or be used with an optically isolated interface (see the appendix *CS I/O Serial Interfaces* (p. 628)) to raise the ring line and put the CR800 in the telecommunication command state.
- Asynchronous serial communication port that can be configured to communicate with the CR800.

Term. modulo divide

A math operation. Result equals the remainder after a division.

Term. MSB

Most **s**ignificant **b**it (the leading bit). See the appendix *Endianness* (p. 619).

Term. multi-meter

An inexpensive and readily available device useful in troubleshooting data-acquisition system faults.

Term. multiplier

A term, often a parameter in a CRBasic measurement instruction, that designates the slope (aka, scaling factor or gain) in a linear function. For example, when converting °C to °F, the equation is °F = °C*1.8 + 32. The factor **1.8** is the multiplier. See *Term. offset* (p. 495).

Term. mV

The SI abbreviation for millivolts.

Term. NAN

Not **a n**umber. A data word indicating a measurement or processing error. Voltage over-range, SDI-12 sensor error, and undefined mathematical results can produce NAN. See the section *NAN and ±INF* (p. 458).

Term. neighbor device

Device in a PakBus network that communicate directly with a device without being routed through an intermediate device. See *PakBus* (p. 496).

Term. NIST

National Institute of Standards and Technology

Term. node

Devices in a network — usually a PakBus network. The communication server dials through, or communicates with, a node. Nodes are organized as a hierarchy with all nodes accessed by the same device (parent node) entered as child nodes. A node can be both a parent and a child. See *PakBus* —

Overview (p. 88).

Term. NSEC

Eight-byte data type divided up as four bytes of seconds since 1990 and four bytes of nanoseconds into the second. See *Data Type* (p. 129, p. 128) tables.

Term. null-modem

A device, usually a multi-conductor cable, which converts an RS-232 port from DCE to DTE or from DTE to DCE.

Term. Numeric Monitor

A digital monitor in *datalogger support software* (p. 631) or in a keyboard display.

Term. offset

A term, often a parameter in a CRBasic measurement instruction, that designates the y-intercept (aka, shifting factor or zeroing factor) in a linear function. For example, when converting °C to °F, the equation is °F = °C*1.8 + 32. The factor **32** is the offset. See *Term. multiplier* (p. 494).

Term. ohm

The unit of resistance. Symbol is the Greek letter Omega (Ω). 1.0 Ω equals the ratio of 1.0 volt divided by 1.0 ampere.

Term. Ohm's Law

Describes the relationship of current and resistance to voltage. Voltage equals the product of current and resistance (V = I • R).

Term. on-line data transfer

Routine transfer of data to a peripheral left on-site. Transfer is controlled by the program entered in the datalogger.

Term. operating system

The operating system (also known as "firmware") is a set of instructions that controls the basic functions of the CR800 and enables the use of user written CRBasic programs. The operating system is preloaded into the CR800 at the factory but can be re-loaded or upgraded by you using *Device Configuration Utility* (p. 109) software. The most recent CR800 operating system .obj file is available at *www.campbellsci.com/downloads* (*http://www.campbellsci.com/downloads*).

Term. output

A loosely applied term. Denotes a) the information carrier generated by an electronic sensor, b) the transfer of data from variable memory to final-data memory, or c) the transfer of electric power from the CR800 or a peripheral to another device.

Term. output array

A string of data values output to final-data memory. Output occurs when the data table output trigger is **True**.

Term. output interval

See *data-output-interval* (p. 486).

Term. output-processing instructions

See *data-output-processing instructions* (p. 486).

Term. output-processing memory

See *data-output-processing memory* (p. 486).

Term. PakBus

A proprietary telecommunication protocol similar to *IP* (p. 492) protocol developed by Campbell Scientific to facilitate communications between Campbell Scientific instrumentation. See *PakBus — Overview* (p. 88) for more information.

Term. PakBusGraph software

Shows the relationship of various nodes in a PakBus network and allows for monitoring and adjustment of some *registers* (p. 498) in each node. A PakBus node is typically a Campbell Scientific datalogger, a PC, or a telecommunication device. See section *Datalogger Support Software* (p. 429).

Term. parameter

Parameter (p. 496): part of a procedure (or command) definition.

Argument (p. 481): part of a procedure call (or command execution). An argument is placed in a parameter. For example, in the CRBasic command **Battery(*dest*)**, ***dest*** is a parameter that defines what argument is to be put in its place in a CRBasic program. If a variable named ***BattV*** is to hold the result of the battery measurement made by **Battery()**, ***BattV*** is the argument placed in ***dest***. In the statement

```
Battery(BattV)
```

BattV is the argument.

Term. period average

A measurement technique using a high-frequency digital clock to measure time differences between signal transitions. Sensors commonly measured with period average include water-content reflectometers.

Term. peripheral

Any device designed for use with the CR800 (or another Campbell Scientific datalogger). A peripheral requires the CR800 to operate. Peripherals include *measurement, control* (p. 84), and *data-retrieval and telecommunication* (p. 627)

modules.

Term. ping

A software utility that attempts to contact another device in a network. See section *PakBus — Overview* (p. 88) and sections *Ping (PakBus)* (p. 377) and *Ping (IP)* (p. 288).

Term. ping

A CRBasic program execution mode wherein instructions are evaluated in groups of like instructions, with a set group prioritization. More information is available in section *Pipeline Mode* (p. 150). See *Term. sequential mode* (p. 501).

Term. Poisson ratio

A ratio used in strain measurements. Equal to transverse strain divided by extension strain as follows:

$v = -(\varepsilon_{trans} / \varepsilon_{axial})$.

Term. precision

A measure of the repeatability of a measurement. Also see the appendix *Accuracy, Precision, and Resolution* (p. 507).

Term. PreserveVariables

CRBasic instruction that protects **Public** variables from being erased when a program is recompiled.

Term. print device

Any device capable of receiving output over pin 6 (the PE line) in a receive-only mode. Printers, "dumb" terminals, and computers in a terminal mode fall in this category.

Term. print peripheral

See *print device* (p. 497).

Term. processing instructions

CRBasic instructions used to further process input-data values and return the result to a variable where it can be accessed for output processing. Arithmetic and transcendental functions are included. See appendix *Processing and Math Instructions* (p. 537).

Term. program control instructions

Modify the execution sequence of CRBasic instructions. Also used to set or clear flags. See section *PLC Control — Overview* (p. 74).

Term. program statement

A complete program command construct confined to one command line or to multiple command lines merged with the line continuation characters <space><underscore> (_). A command line, even with line continuation, cannot exceed 512 characters.

Term. Program Send command

Program Send is a feature of *datalogger support software* (p. 93). Command wording varies among software according to the following table:

Table 129. Program Send Command

Software	Command	Command Location
LoggerNet	**Send New...**	*Connect* screen
PC400	**Send Program**	**Clock/Program** tab
RTDAQ	**Send Program**	**Clock/Program** tab
PC200W	**Send Program**	**Clock/Program** tab

Term. Public

A CRBasic command for declaring and dimensioning variables. Variables declared with **Public** can be monitored during datalogger operation. See *Term. Dim* (p. 487).

Term. pulse

An electrical signal characterized by a rapid increase in voltage follow by a short plateau and a rapid voltage decrease.

Term. record

A record is a complete line of data in a data table or data file. All data in a record share a common time stamp.

Term. regulator

A setting, a Status table element, or a DataTableInformation table element.

Term. regulator

A device for conditioning an electrical power source. Campbell Scientific regulators typically condition ac or dc voltages greater than 16 Vdc to about 14 Vdc.

Term. Reset Tables command

Reset Tables command resets data tables configured for fill and stop. Location of the command varies among datalogger support software according to the following:

LoggerNet — Connect Screen | **Station Status** tab | **Table Fill Times** tab | **Reset Tables**

PC400 — command sequence: **Datalogger** | **Station Status** | **Table Fill Times** | **Reset Tables**
RTDAQ — command sequence: **Datalogger** | **Station Status** | **Table Fill Times** | **Reset Tables**
PC200W — command sequence: **Datalogger** | **Station Status** | **Table Fill Times** | **Reset Tables**

Term. resistance

A feature of an electronic circuit that impedes or redirects the flow of electrons through the circuit.

Term. resistor

A device that provides a known quantity of resistance.

Term. resolution

A measure of the fineness of a measurement. See also *Accuracy, Precision, and Resolution* *(p. 507).*

Term. ring line

Ring line is pulled high by an external device to notify the CR800 to commence RS-232 communications. Ring line is pin 3 of a *DCE* *(p. 486)* RS-232 port.

Term. ring memory

A memory configuration that allows the oldest data to be overwritten with the newest data. This is the default setting for final-memory data tables.

Term. ringing

Oscillation of sensor output (voltage or current) that occurs when sensor excitation causes parasitic capacitances and inductances to resonate.

Term. RMS

Root-mean square, or quadratic mean. A measure of the magnitude of wave or other varying quantities around zero.

Term. router

Device configured as a router is able to forward PakBus packets from one port to another. To perform its routing duties, a CR800 configured as a router maintains its own list of neighbors and sends this list to other routers in the PakBus network. It also obtains and receives neighbor lists from other routers.

Term. RS-232

Recommended **S**tandard **232**. A loose standard defining how two computing devices can communicate with each other. The implementation of RS-232 in Campbell Scientific dataloggers to PC communications is quite rigid, but

transparent to most users. Features in the CR800 that implement RS-232 communication with smart sensors are flexible.

Term. sample rate

The rate at which measurements are made by the CR800. The measurement sample rate is of interest when considering the effect of time skew, or how close in time are a series of measurements, or how close a time stamp on a measurement is to the true time the phenomenon being measured occurred. A 'maximum sample rate' is the rate at which a measurement can repeatedly be made by a single CRBasic instruction.

Sample rate is how often an instrument reports a result at its output; frequency response is how well an instrument responds to fast fluctuations on its input. By way of example, sampling a large gage thermocouple at 1 kHz will give a high sample rate but does not ensure the measurement has a high frequency response. A fine-wire thermocouple, which changes output quickly with changes in temperature, is more likely to have a high frequency response.

Term. scan interval

The time interval between initiating each execution of a given **Scan()** of a CRBasic program. If the **Scan()** ***Interval*** is evenly divisible into 24 hours (86,400 seconds), it is synchronized with the 24 hour clock, so that the program is executed at midnight and every **Scan()** ***Interval*** thereafter. The program is executed for the first time at the first occurrence of the **Scan()** ***Interval*** after compilation. If the **Scan()** ***Interval*** does not divide evenly into 24 hours, execution will start on the first even second after compilation.

Term. scan time

When time functions are run inside the **Scan()** / **NextScan** construct, time stamps are based on when the scan was started according to the CR800 clock. Resolution of scan time is equal to the length of the scan. See *system time* ***(p. 504).***

Term. SDI-12

Serial **D**ata **I**nterface at **12**00 baud. Communication protocol for transferring data between the CR800 and SDI-12 compatible smart sensors.

Term. SDM

Synchronous **D**evice for **M**easurement. A processor-based peripheral device or sensor that communicates with the CR800 via hardwire over a short distance using a protocol proprietary to Campbell Scientific.

Term. Seebeck effect

Induces microvolt level thermal electromotive forces (EMF) across junctions of dissimilar metals in the presence of temperature gradients. This is the principle behind thermocouple temperature measurement. It also causes small, correctable voltage offsets in CR800 measurement circuitry.

Term. ping

A CRBasic program execution mode wherein each statement is evaluated in the order it is listed in the program. More information is available in section *Sequential Mode* (p. 151). See *Term. pipeline mode* (p. 497).

Term. semaphore (measurement semaphore)

In sequential mode, when the main scan executes, it locks the resources associated with measurements. In other words, it acquires the measurement semaphore. This is at the scan level, so all subscans within the scan (whether they make measurements or not), will lock out measurements from slow sequences (including the system background calibration). Locking measurement resources at the scan level gives non-interrupted measurement execution of the main scan.

Term. send

Send button in *datalogger support software* (p. 93). Sends a CRBasic program or operating system to a CR800.

Term. serial

A loose term denoting output of a series of alphanumeric characters in electronic form.

Term. Short Cut software

A CRBasic program wizard suitable for many CR800 applications. Knowledge of CRBasic is not required to use *Short Cut*. It is available at no charge at *www.campbellsci.com*.

Term. SI (Système Internationale)

The uniform **i**nternational **s**ystem of metric units. Specifies accepted units of measure.

Term. signature

A number which is a function of the data and the sequence of data in memory. It is derived using an algorithm that assures a 99.998% probability that if either the data or the data sequence changes, the signature changes. See sections *Security — Overview* (p. 90) and *Signatures* (p. 447).

Term. single-ended

A serial communication protocol. One-direction data only. Serial communications between a serial sensor and the CR800 may be simplex.

Reading list: *simplex* (p. 501), *duplex* (p. 241), *half-duplex* (p. 490), and *full-duplex* (p. 490).

Term. single-ended

Denotes a sensor or measurement terminal wherein the analog-voltage signal is carried on a single lead and measured with respect to ground (0 V).

Term. skipped scans

Occur when the CRBasic program is too long for the scan interval. Skipped scans can cause errors in pulse measurements.

Term. slow sequence

A usually slower secondary scan in the CRBasic program. The main scan has priority over a slow sequence.

Term. SMTP

Simple Mail Transfer Protocol. A TCP/IP application protocol.

Term. SNP

Snapshot file

Term. SP

Space

Term. state

Whether a device is on or off.

Term. Station Status command

A command available in most *datalogger support software* (p. 93). The following figure is a sample of station status output.

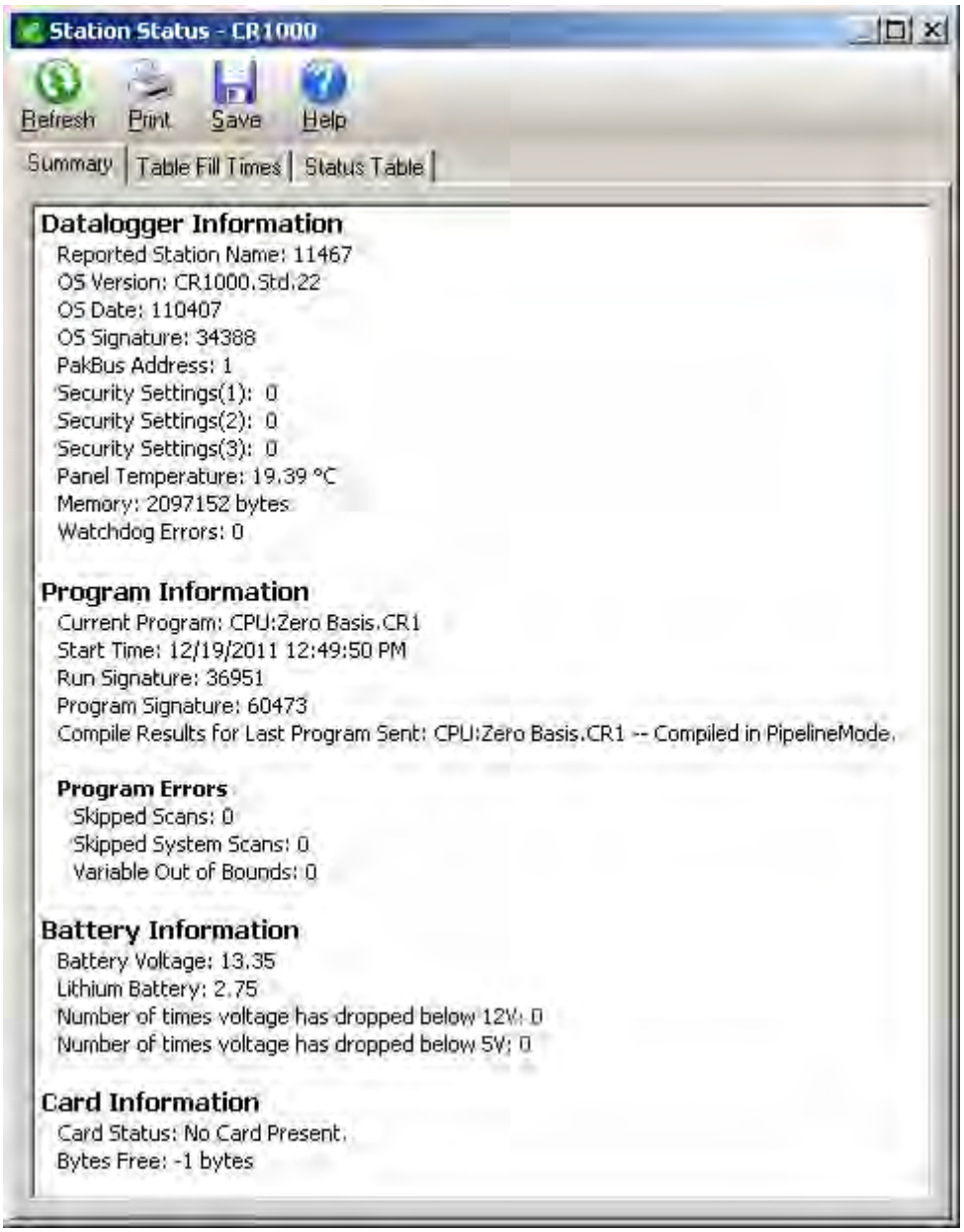

Term. string

A datum or variable consisting of alphanumeric characters.

Term. support software

See *Term. datalogger support software* (p. 485).

Term. swept frequency

A succession of frequencies from lowest to highest used as the method of wire excitation with *Vspect* (p. 506) measurements.

Term. synchronous

The transmission of data between a transmitting and a receiving device occurs as a series of zeros and ones. For the data to be "read" correctly, the receiving device must begin reading at the proper point in the series. In synchronous communication, this coordination is accomplished by synchronizing the transmitting and receiving devices to a common clock signal (see *Asynchronous* (p. 240)).

Term. system time

When time functions are run outside the **Scan()** / **NextScan** construct, the time registered by the instruction will be based on the system clock, which has a 10 ms resolution. See *scan time* (p. 500).

Term. task

Two definitions:

- Grouping of CRBasic program instructions automatically by the CR800 compiler. Tasks include measurement, SDM or digital, and processing. Tasks are prioritized when the CRBasic program runs in pipeline mode.
- A user-customized function defined through *LoggerNet Task Master*.

Term. TCP/IP

Transmission Control Protocol / Internet Protocol.

Term. Telnet

A software utility that attempts to contact and interrogate another specific device in a network. Telnet is resident in Windows OSs.

Term. terminal

Point at which a wire (or wires) connects to a wiring panel or connector. Wires are usually secured in terminals by screw- or lever-and-spring actuated gates. with small screw- or spring-loaded clamps. See *connector* (p. 484).

Term. terminal emulator

A command-line shell that facilitates the issuance of low-level commands to a datalogger or some other compatible device. A terminal emulator is available in most *datalogger support software* (p. 93) available from Campbell Scientific.

Term. thermistor

A thermistor is a temperature measurement device with a resistive element that changes in resistance with temperature. The change is wide, stable, and well characterized. The output of a thermistor is usually non-linear, so

measurement requires linearization by means of a Steinhart-Hart or polynomial equation. CRBasic instructions **Therm107()**, **Therm108()**, and **Therm109()** use Steinhart-Hart equations.

Term. time domain

Time domain describes data graphed on an X-Y plot with time on the X axis. Time-series data are in the time domain.

Term. throughput rate

Rate that a measurement can be taken, scaled to engineering units, and the stored in a final-memory data table. The CR800 has the ability to scan sensors at a rate exceeding the throughput rate. The primary factor determining throughput rate is the processing programmed into the CRBasic program. In sequential-mode operation, all processing called for by an instruction must be completed before moving on to the next instruction.

Term. TTL

Transistor-to-**T**ransistor **L**ogic. A serial protocol using 0 Vdc and 5 Vdc as logic signal levels.

Term. TLS

Transport **L**ayer **S**ecurity. An Internet communication security protocol.

Term. toggle

To reverse the current power state.

Term. UINT2

Data type used for efficient storage of totalized pulse counts, port status (status of 16 ports stored in one variable, for example) or integer values that store binary flags.

Term. unconditioned output

The fundamental output of a sensor, or the output of a sensor before scaling factors are applied. See *conditioned output* *(p. 484).*

Term. UPS

Uninterruptible **P**ower **S**upply. A UPS can be constructed for most datalogger applications using ac line power, an ac/ac or ac/dc wall adapter, a charge controller, and a rechargeable battery. The CR800 needs and external charge controller.

Term. user program

The CRBasic program written by you in *Short Cut* program wizard.

Term. USR: drive

A portion of CR800 memory dedicated to the storage of image or other files.

Term. URI

uniform resource identifier

Term. URL

uniform resource locater

Term. variable

A packet of SRAM given an alphanumeric name. Variables reside in variable memory.

Term. variable memory

That portion of SRAM reserved for storing variables. Variable memory can be, and regularly is, overwritten with new values or strings as directed by the CRBasic program. When variables are declared **As Public**, the memory can be visually monitored.

Term. Vac

Volts **a**lternating **c**urrent. Also VAC. Two definitions:

- Mains or grid power is high-level Vac, usually 110 Vac or 220 Vac at a fixed frequency of 50 Hz or 60 Hz. High-level Vac can be the primary power source for Campbell Scientific power supplies. Do not connect high-level Vac directly to the CR800.
- The CR800 measures varying frequencies of low-level Vac in the range of ±20 Vac. For example, some anemometers output a low-level Vac signal.

Term. Vdc

Volts **d**irect **c**urrent. Also VDC. Two definitions:

- The CR800 operates with a nominal 12 Vdc. The CR800 can supply nominal 12 Vdc, regulated 5 Vdc, regulated 3.3 Vdc, and variable excitation in the ±2.5 Vdc range.
- The CR800 measures analog voltage in the ±5.0 Vdc range and pulse voltage in the ±20 Vdc range.

Term. volt meter

See *Term. multi-meter* *(p. 494).*

Term. volts

SI unit for electrical potential.

Term. Vspect

trademark for Campbell Scientific's proprietary spectral-analysis, frequency-domain, vibrating-wire measurement technique.

Term. watchdog timer

An error-checking system that examines the processor state, software timers, and program-related counters when the CRBasic program is running. See section *Watchdog Errors* (p. 464). The following will cause watchdog timer resets, which reset the processor and CRBasic program execution.

- Processor bombed
- Processor neglecting standard system updates
- Counters are outside the limits
- Voltage surges
- Voltage transients

When a reset occurs, a counter is incremented in the **WatchdogTimer** entry of the **Status** *table* (p. 577). A low number (1 to 10) of watchdog timer resets is of concern, but normally indicates that the situation should just be monitored.

A large number of errors (>10) accumulating over a short period indicates a hardware or software problem. Consult with a Campbell Scientific application engineer.

Term. weather-tight

Describes an instrumentation enclosure impenetrable by common environmental conditions. During extraordinary weather events, however, seals on the enclosure may be breached.

Term. web API

Application Programming Interface (see the section *Web Service API* (p. 402), for more information).

Term. wild card

a character or expression that substitutes for any other character or expression.

Term. XML

Extensible markup language.

Term. user program

The CRBasic program written by you in *Short Cut* program wizard or *CRBasic Editor*.

11.2 Concepts

11.2.1 Accuracy, Precision, and Resolution

Three terms often confused are accuracy, precision, and resolution. Accuracy is a measure of the correctness of a single measurement, or the group of measurements in the aggregate. Precision is a measure of the repeatability of a group of measurements. Resolution is a measure of the fineness of a measurement. Together, the three define how well a data-acquisition system performs. To understand how the three relate to each other, consider "target

practice" as an analogy. Table *Accuracy, Precision, and Resolution* (p. 507) shows four targets. The bull's eye on each target represents the absolute correct measurement. Each shot represents an attempt to make the measurement. The diameter of the projectile represents resolution. The objective of a data-acquisition system should be high accuracy, high precision, and to produce data with resolution as high as appropriate for a given application.

Figure 127. Relationships of Accuracy, Precision, and Resolution

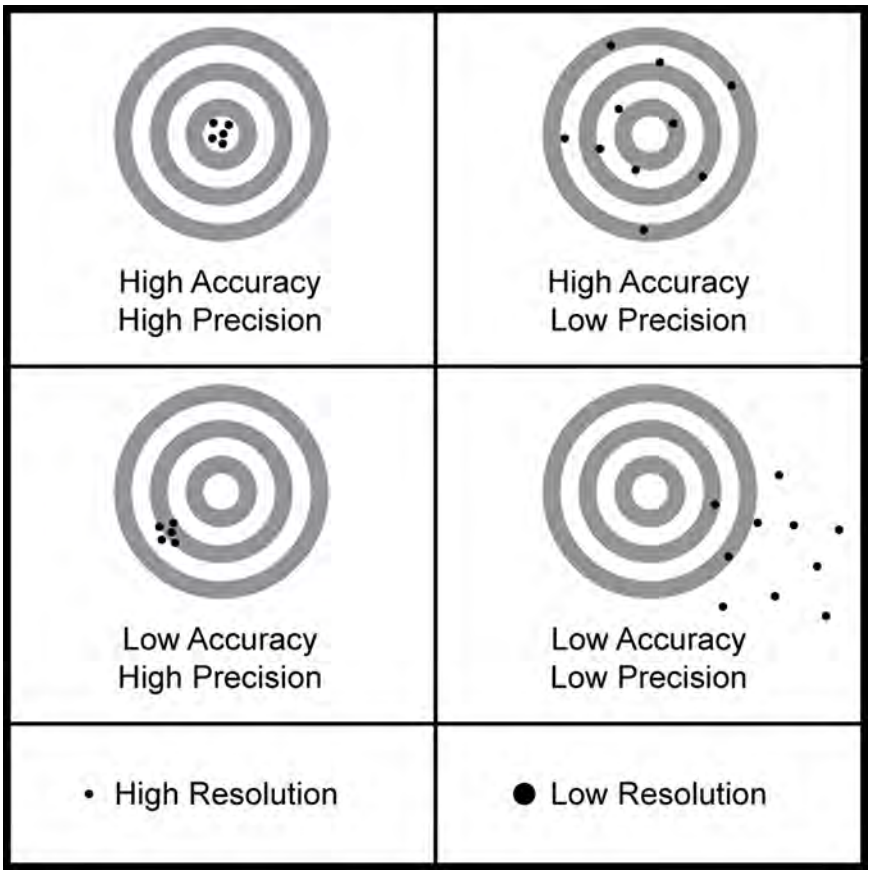

12. Attributions

Use of the following trademarks in the *CR800 Operator's Manual* does not imply endorsement by their respective owners of Campbell Scientific:

- Crydom
- Newark
- Mouser
- MicroSoft
- WordPad
- HyperTerminal
- LI-COR

Appendix A. CRBasic Programming Instructions

Related Topics:
- *CRBasic Programming — Overview* (p. 86)
- *CRBasic Programming — Details* (p. 120)
- *CRBasic Programming — Instructions* (p. 511)
- *Programming Resource Library* (p. 167)
- *CRBasic Editor Help*

All CR800 CRBasic *instructions* (p. 491) are listed in this appendix.

- An alphabetical listing is in the index under *Instruction*.
- Code examples are throughout this manual and can be located with help from the *Table of Contents CRBasic Examples* listing.
- Parameter listings, application information, and code examples are available in *CRBasic Editor* (p. 123) *Help*.

A.1 Program Declarations

Instructions used in program declarations are usually placed in a program prior to the **BeginProg()** instruction.

AngleDegrees

Sets math functions to use degrees instead of radians.

Syntax

```
AngleDegrees
```

EncryptExempt

Defines one or more PakBus addresses to which the datalogger will not send encrypted PakBus messages, even though PakBus encryption is enabled.

Syntax

```
EncryptExempt(BeginPakBusAddr, EndPakBusAddr)
```

PipelineMode

Configures the CR800 to perform measurement tasks separate from, but concurrent with, processing tasks.

Syntax

```
PipelineMode
```

SequentialMode

Configures datalogger to perform tasks sequentially.

Syntax

```
SequentialMode
```

SetSecurity

Sets numeric password for datalogger security levels 1, 2, and 3. Executes at compile time.

Syntax

```
SetSecurity(security[1], security[2], security[3])
```

StationName

Sets the station name internal to the CR800. Does not affect data files created by datalogger support software. See sections *Miscellaneous Features* (p. 172) and *Conditional Output* (p. 168).

Syntax

```
StationName(name of station)
```

Sub / ExitSub / EndSub

Declares the name, variables, and code that form a subroutine. Argument list is optional. **Exit Sub** is optional.

Syntax

```
Sub subname (argument list)
  [statement block]
Exit Sub
  [statement block]
End Sub
```

WebPageBegin / WebPageEnd

See *TCP/IP — Details* (p. 282).

A.1.1 Variable Declarations & Modifiers

Alias

Assigns a second name to a variable.

Syntax

```
Alias [variable] = [alias name]; Alias [array(4)] = [alias
    name], [alias name(2)], [alias name]
```

As

Sets data type for **Dim** or **Public** variables.

Syntax

```
Dim [variable] AS [data type]
```

Dim

Declares and dimensions private variables. Dimensions are optional. **Dim** variables cannot be viewed in *numeric monitors* (p. 495).

Syntax

```
Dim [variable name (x,y,z)]
```

ESSVariables

Automatically declares variables required by an **E**nvironmental **S**ensor **S**tation application. Used in conjunction with **ESSInitialize**.

Syntax

```
ESSVariables
```

NewFieldNames

Assigns a new name to a generic variable or array. Designed for use with Campbell Scientific wireless sensor networks.

Syntax

```
NewFieldNames(GenericName, NewNames)
```

PreserveVariables

Retains values in **Dim** or **Public** variables when the CRBasic program restarts after a power failure, manual stop, or other operations that cause the program to recompile.

Syntax

```
PreserveVariables
```

Public

Declares and dimensions public variables. Dimensions are optional.

Syntax

```
Public [variable name (x,y,z)]
```

ReadOnly

Flags a comma separated list of variables (**Public** or **Alias** name) as read-only.

Syntax

```
ReadOnly [variable1, variable2, ...]
```

Units

Assigns a unit name to a field associated with a variable.

Syntax

```
Units [variable] = [unit name]
```

A.1.2 Constant Declarations

Const

Declares symbolic constants for use in place of numeric entries.

Syntax

```
Const [constant name] = [value or expression]
```

ConstTable / EndConstTable

Declares constants, the value of which can be changed using the CR1000KD Keyboard Display or terminal **C** option. The program is recompiled with the new values when values change. See *Constants* (p. 135).

Syntax

```
ConstTable
  [constant a] = [value]
  [constant b] = [value]
  [constant c] = [value]
EndConstTable
```

A.2 Data-Table Declarations

DataTable / EndTable

Mark the beginning and end of a data table.

Syntax

```
DataTable(Name, TrigVar, Size)
  [data table modifiers]
  [on-line storage destinations]
  [output processing instructions]
EndTable
```

DataTime

Declaration within a data table that allows time stamping with system time.

Syntax

```
DataTime(Option)
```

A.2.1 Data-Table Modifiers

DataEvent

Sets triggers to start and stop storing records within a table. One application is with **WorstCase()**.

Syntax

```
DataEvent(RecsBefore, StartTrig, StopTrig, RecsAfter)
```

DataInterval

Sets the time interval for an output table.

Syntax

```
DataInterval(TintoInt, Interval, Units, Lapses)
```

FillStop

Sets a data table to fill and stop. By default, data tables are *ring memory* (p. 499).

Syntax

```
FillStop
```

Note To reset a table after it fills and stops, use **ResetTable()** instruction in the CRBasic program or the datalogger support software *Reset Tables* (p. 498) command.

OpenInterval

Sets time-series processing to include all measurements since the last time data storage occurred.

Syntax

```
OpenInterval
```

TableHide

Suppresses the display and data collection of a data table in CR800 memory.

Syntax

```
TableHide
```

A.2.2 Data Destinations

Note **TableFile()** with ***Option 64*** is the preferred instruction to write data to a Campbell Scientific mass storage device in most applications. See TableFile() with Option 64 for more information.

CardFlush

Immediately writes any buffered data from CR800 internal memory and file system to a Campbell Scientific mass storage device. **TableFile()** with ***Option 64*** is often a preferred alternative to this instruction.

Syntax

```
CardFlush
```

DSP4

Send data to the DSP4 display. Manufacturing of the DSP4 Head-Up Display is discontinued.

Syntax

```
DSP4(FlagVar, Rate)
```

TableFile

Writes a file from a data table to a CR800 memory drive.

Syntax

```
TableFile("FileName", Options, MaxFiles, NumRecs /
    TimeIntoInterval, Interval, Units, OutStat, LastFileName)
```

A.2.3 Processing for Output to Final-Data Memory

Read More See *Data Output-Processing Instructions* *(p. 143).*

FieldNames

Immediately follows an output processing instruction to change default field names.

Syntax

```
FieldNames("Fieldname1 : Description1, Fieldname2 :
    Description2…")
```

A.2.3.1 Single-Source

Average

Stores the average value over the data-output interval for the source variable or each element of the array specified.

Syntax

```
Average(Reps, Source, DataType, DisableVar)
```

Covariance

Calculates the covariance of values in an array over time.

Syntax

```
Covariance(NumVals, Source, DataType, DisableVar, NumCov)
```

FFT

Performs a Fast Fourier Transform on a time series of measurements stored in an array.

Syntax

```
FFT(Source, DataType, N, Tau, Units, Option)
```

Maximum

Stores the maximum value over the data-output interval.

Syntax

```
Maximum(Reps, Source, DataType, DisableVar, Time)
```

Median

Stores the median of a dependant variable over the data-output interval.

Syntax

```
Median(Reps, Source, MaxN, DataType, DisableVar)
```

Minimum

Stores the minimum value over the data-output interval.

Syntax

```
Minimum(Reps, Source, DataType, DisableVar, Time)
```

Moment

Stores the mathematical moment of a value over the data-output interval.

Syntax

```
Moment(Reps, Source, Order, DataType, DisableVar)
```

PeakValley

Detects maxima and minima in a signal.

Syntax

```
PeakValley(DestPV, DestChange, Reps, Source, Hysteresis)
```

Sample

Stores the current value at the time of output.

Syntax

```
Sample(Reps, Source, DataType)
```

SampleFieldCal

Writes field calibration data to a table. See *Calibration Functions* (p. 572).

SampleMaxMin

Samples a variable when another variable reaches its maximum or minimum for the defined output period.

Syntax

```
SampleMaxMin(Reps, Source, DataType, DisableVar)
```

StdDev

Calculates the standard deviation over the data-output interval.

Syntax

```
StdDev(Reps, Source, DataType, DisableVar)
```

Totalize

Sums the total over the data-output interval.

Syntax

```
Totalize(Reps, Source, DataType, DisableVar)
```

A.2.3.2 Multiple-Source

ETsz

Stores evapotranspiration (ETsz) and solar radiation (RSo).

Syntax

```
ETsz(Temp, RH, uZ, Rs, Longitude, Latitude, Altitude, Zw, Sz,
    DataType, DisableVar)
```

RainFlowSample

Stores a sample of the CDM_VW300RainFlow into a data table.

Syntax

```
RainFlowSampe(Source, DataType)
```

WindVector

Processes wind speed and direction from either polar or orthogonal sensors. To save processing time, only calculations resulting in the requested data are performed.

Syntax

```
WindVector(Repetitions, Speed/East, Direction/North,
    DataType, DisableVar, Subinterval, SensorType, OutputOpt)
```

Read More See *Wind Vector* *(p. 288)*.

A.3 Single Execution at Compile

The following instructions reside between the **BeginProg** and **Scan()** instructions.

ESSInitialize

Initialize ESS variables at compile time. Used in conjunction with **ESSVariables**.

Syntax

```
ESSInitialize
```

MovePrecise

Used in conjunction with **AddPrecise**. Moves a high precision variable into another variable.

Syntax

```
MovePrecise(PrecisionVariable, X)
```

PulseCountReset

Resets the pulse counters and the running averages used in the pulse count instruction. A mostly obsolete instruction. Used only in very specialized code.

Syntax

```
PulseCountReset
```

A.4 Program Control Instructions

A.4.1 Common Program Controls

BeginProg / EndProg

Marks the beginning and end of a program.

Syntax

```
BeginProg
  [program code]
EndProg
```

Call

Transfers program control from the main program to a subroutine.

Syntax

```
Call subname (list of variables)
```

CallTable

Calls a data table, typically for output processing.

Syntax

```
CallTable(TableName)
```

Delay

Delays the program.

Syntax

```
Delay(Option, Delay, Units)
```

Do / While / Until / Exit Do / Loop

Repeats a block of statements while a condition is true or until a condition becomes true.

Syntax

```
Do [{While | Until} condition]
  [statementblock]
[ExitDo]
  [statementblock]
Loop

-or-
```

```
Do
  [statementblock]
[ExitDo]
  [statementblock]
Loop [{While | Until} condition]
```

EndSequence

Ends a sequence that starts at **BeginProg** or **SlowSequence**. An optional instruction in many applications.

Syntax

```
EndSequence
```

Exit

Exits program.

Syntax

```
Exit
```

For / To / Step / ExitFor / Next

Repeats a group of instructions for a specified number of times.

Syntax

```
For counter = start To end [ Step increment ]
  [statement block]
[ExitFor]
  [statement block]
Next [counter [, counter][, ...]]
```

If / Then / Else / ElseIf / EndIf

Programs into or around a segment of code conditional on the evaluation of an expression. **Else** is optional. **ElseIf** is optional. Note that **EndSelect** and **EndIf** call the same function.

Syntax

```
If [condition] Then [thenstatements] Else [elsestatements]

-or-

If [condition 1] Then
  [then statements]
ElseIf [condition 2] Then
  [elseif then statements]
Else
  [else statements]
EndIf
```

Scan / ExitScan / ContinueScan / NextScan

Establishes the program scan rate. **ExitScan** and **ContinueScan** are optional. See *Measurement: Faster Analog Rates* (p. 221) for information on use of **Scan()** / **NextScan** in burst measurements.

Syntax

```
Scan(Interval, Units, Option, Count)
  [statement block]
ExitScan
  [statement block]
ContinueScan
  [statement block]
NextScan
```

Select Case / Case / Case Is / Case Else / EndSelect

Executes one of several statement blocks depending on the value of an expression. **CaseElse** is optional. Note that **EndSelect** and **EndIf** call the same function.

Syntax

```
Select Case testexpression
Case [expression 1]
  [statement block 1]
Case [expression 2]
  [statement block 2]
Case Is [expression fragment]
Case Else
  [statement block 3]
EndSelect
```

SlowSequence

Marks the beginning of a section of code that will run concurrently with the main program.

Syntax

```
SlowSequence
```

SubScan / NextSubScan

Controls a multiplexer or measures some analog inputs at a faster rate than the program scan. See *Measurement: Faster Analog Rates* *(p. 221)* for information on use of **SubScan** / **NextSubScan**.

Syntax

```
SubScan(SubInterval, Units, Count)
  [measurements and processing]
NextSubScan
```

TriggerSequence

Used with **WaitTriggerSequence** to control the execution of code within a slow sequence.

Syntax

```
TriggerSequence(SequenceNum, Timeout)
```

WaitTriggerSequence

Used with **TriggerSequence** to control the execution of code within a slow sequence.

Syntax

```
WaitTriggerSequence
```

WaitDigTrig

Triggers a measurement scan from an external digital trigger.

Syntax

```
WaitDigTrig(ControlPort, Option)
```

While / Wend

Execute a series of statements in a loop as long as a given condition is true.

Syntax

```
While [condition]
  [StatementBlock]
Wend
```

A.4.2 Advanced Program Controls

Data / Read / Restore

Defines a list of FLOAT constants to be read (using **Read**) into a variable array later in the program.

Syntax

```
Data [list of constants]
  Read [VarExpr]
Restore
```

DataLong / Read / Restore

Defines a list of LONG constants to be read (using ***Read***) into a variable array later in the program.

Syntax

```
DataLong [list of constants]
  Read [Variable Expression]
Restore
```

IfTime

Returns a number indicating **True** (**-1**) or **False** (**0**) based on the CR800 real-time clock.

Syntax

```
If (IfTime(TintoInt, Interval, Units)) Then

-or-
```

```
Variable = IfTime(TintoInt, Interval, Units)
```

Read

Reads constants from the list defined by **Data** or **DataLong** into a variable array.

Syntax

```
Read [Variable Expression]
```

Restore

Resets the location of the **Read** pointer back to the first value in the list defined by **Data** or **DataLong**.

Syntax

```
Restore
```

SemaphoreGet

Acquires *semaphore* (p. 501) 1 to 3 to avoid resource conflicts.

Syntax

```
SemaphoreGet()
```

SemaphoreRelease

Releases *semaphore* (p. 501) previously acquired with **SemaphoreGet()**.

Syntax

```
SemaphoreRelease()
```

ShutDownBegin

Begins code to be run in the event of a normal shutdown such as when sending a new program.

Syntax

```
ShutDownBegin
```

ShutDownEnd

Ends code to be run in the event of a normal shutdown such as when sending a new program.

Syntax

```
ShutDownEnd
```

TimeIntoInterval

Returns a number indicating **True** (**-1**) or **False** (**0**) based on the datalogger real-time clock.

Syntax

```
Variable = TimeIntoInterval(TintoInt, Interval, Units)

-or-
```

```
If TimeIntoInterval(TintoInt, Interval, Units)
```

TimeIsBetween

Determines if the CR800 real-time clock falls within a range of time.

Syntax

```
TimeIsBetween(BeginTime, EndTime, Interval, Units)
```

A.5 Measurement Instructions

Read More For information on recording data from RS-232 and TTL output sensors, see the section *Serial Input / Output* (p. 556) and *Serial I/O* (p. 238).

A.5.1 Diagnostics

Battery

Measures input voltage.

Syntax

```
Battery(Dest)
```

ComPortIsActive

Returns a Boolean value based on whether or not activity is detected on a COM port.

Syntax

```
variable = ComPortIsActive(ComPort)
```

InstructionTimes

Returns the execution time of each instruction in the program.

Syntax

```
InstructionTimes(Dest)
```

PanelTemp

Measures the panel temperature in °C.

Syntax

```
PanelTemp(Dest, Integ)
```

Signature

Returns the signature for program code in a datalogger program.

Syntax

```
variable = Signature
```

A.5.2 Voltage

VoltDiff

Measures the voltage difference between high and low inputs of a differential analog-input channel.

Syntax

```
VoltDiff(Dest, Reps, Range, DiffChan, RevDiff, SettlingTime,
    Integ, Mult, Offset)
```

VoltSe

Measures the voltage at a single-ended input with respect to ground.

Syntax

```
VoltSe(Dest, Reps, Range, SEChan, MeasOfs, SettlingTime,
    Integ, Mult, Offset)
```

A.5.3 Thermocouples

Related Topics:
- Thermocouple Measurements — Details
- Thermocouple Measurements — Instructions

TCDiff

Measures a differential thermocouple.

Syntax

```
TCDiff(Dest, Reps, Range, DiffChan, TCType, TRef, RevDiff,
    SettlingTime, Integ, Mult, Offset)
```

TCSe

Measures a single-ended thermocouple.

Syntax

```
TCSe(Dest, Reps, Range, SEChan, TCType, TRef, MeasOfs,
    SettlingTime, Integ, Mult, Offset)
```

A.5.4 Resistive-Bridge Measurements

Related Topics:
- Resistance Measurements — Specifications
- *Resistance Measurements — Overview* *(p. 66)*
- *Resistance Measurements — Details* *(p. 319)*
- *Resistance Measurements — Instructions* *(p. 525)*

BrFull

Measures ratio of V_{diff} / V_x of a four-wire full-bridge. Reports 1000 • (V_{diff} / V_x).

Syntax

```
BrFull(Dest, Reps, Range, DiffChan, Vx/ExChan, MeasPEx, ExmV,
    RevEx, RevDiff, SettlingTime, Integ, Mult, Offset)
```

BrFull6W

Measures ratio of V_{diff2} / V_{diff1} of a six-wire full-bridge. Reports 1000 • (V_{diff2} / V_{diff1}).

Syntax

```
BrFull6W(Dest, Reps, Range1, Range2, DiffChan, Vx/ExChan,
    MeasPEx, ExmV, RevEx, RevDiff, SettlingTime, Integ, Mult,
    Offset)
```

BrHalf

Measures single-ended voltage of a three-wire half-bridge. Delay is optional.

Syntax

```
BrHalf(Dest, Reps, Range, SEChan, Vx/ExChan, MeasPEx, ExmV,
    RevEx, SettlingTime, Integ, Mult, Offset)
```

BrHalf3W

Measures ratio of R_s / R_f of a three-wire half-bridge.

Syntax

```
BrHalf3W(Dest, Reps, Range, SEChan, Vx/ExChan, MeasPEx, ExmV,
    RevEx, SettlingTime, Integ, Mult, Offset)
```

BrHalf4W

Measures ratio of R_s / R_f of a four-wire half-bridge.

Syntax

```
BrHalf4W(Dest, Reps, Range1, Range2, DiffChan, Vx/ExChan,
    MeasPEx, ExmV, RevEx, RevDiff, SettlingTime, Integ, Mult,
    Offset)
```

A.5.5 Excitation

ExciteV

This instruction sets the specified switched-voltage excitation channel to the voltage specified.

Syntax

```
ExciteV(Vx/ExChan, ExmV, XDelay)
```

SW12

Sets a **SW12** switched 12 Vdc terminal high or low.

Syntax

```
SW12(Port)
```

A.5.6 Pulse and Frequency

Related Topics:
- Pulse Measurements — Specifications
- *Pulse Measurements — Overview* (p. 68)
- *Pulse Measurements — Details* (p. 331)
- *Pulse Measurements — Instructions* (p. 527)

Note Pull-up or pull-down resistors may be required for pulse measurements on **C** terminals. See the section *Pulse Measurement Terminals* (p. 333).

PeriodAvg

Measures the period of a signal on **H**/**L**] terminals configured for single-ended voltage input.

Syntax

```
PeriodAvg(Dest, Reps, Range, Terminal, Threshold, PAOption,
    Cycles, Timeout, Mult, Offset)
```

PulseCount

Measures number or frequency of voltages pulses on a **P** or **C** terminal configured for pulse input.

Syntax

```
PulseCount(Dest, Reps, Terminal, PConfig, POption, Mult,
    Offset)
```

VibratingWire

Measure a vibrating-wire sensor. This instruction is obsolete. It has been replaced by the AVW200 module and the AVW200() instruction.

Syntax

```
VibratingWire(Dest, Reps, Range, SEChan, Vx/ExChan,
    StartFreq, EndFreq, TSweep, Steps, DelMeas, NumCycles,
    DelReps, Multiplier, Offset)
```

A.5.7 Digital I/O

CheckPort

Returns the status of a **C** terminal configured for control.

Syntax

```
X = CheckPort(Port)
```

PortGet

Reads the status of a **C** terminal configured for control.

Syntax

```
PortGet(Dest, Port)
```

PortsConfig

Configures **C** terminals for input or output.

Syntax

```
PortsConfig(Mask, Function)
```

ReadIO

Reads the status of **C** terminals.

Syntax

```
ReadIO(Dest, Mask)
```

TimerIO

Measures the time between edges (state transitions) or frequency on **C** terminals.

Syntax

```
TimerIO(Dest, Edges, Function, Timeout, Units)
```

A.5.7.1 Control

PortSet

Sets the specified **C** terminal high or low.

Syntax

```
PortSet(Terminal, State)
```

PulsePort

Toggles the state of a **C** terminal, delays, toggles the terminal, and delays a second time.

Syntax

```
PulsePort(Terminal, Delay)
```

WriteIO

Set the status of **C** terminals.

Syntax

```
WriteIO(Mask, Source)
```

A.5.7.2 Measurement

PWM

Performs pulse-width modulation on a **C** terminal.

Syntax

```
PWM(Source, Terminal, Period, Units)
```

TimerIO

Measures interval or frequency on a **C** terminal.

Syntax

```
TimerIO(Dest, Edges, Function, Timeout, Units)
```

A.5.8 SDI-12 Sensor Suppport — Instructions

Related Topics:
- *SDI-12 Sensor Support — Overview* (p. 72)
- *SDI-12 Sensor Support — Details* (p. 344)
- *Serial I/O: SDI-12 Sensor Support — Programming Resource* (p. 259)
- *SDI-12 Sensor Support — Instructions* (p. 529)

SDI12Recorder

Issues commands to, and retrieves results from, an SDI-12 sensor.

Syntax

```
SDI12Recorder(Dest, Terminal, SDIAddress, SDICommand,
    Multiplier, Offset)
```

SDI12SensorSetup

Sets up the CR800 to act as an SDI-12 sensor.

```
SDI12SensorSetup(Repetitions, SDIPort, SDIAddress,
    ResponseTime)
```

SDI12SensorResponse

Manages data being held by the CR800 for transfer to an SDI-12 recorder.

Syntax

```
SDI12SensorResponse(SDI12Source)
```

A.5.9 Specific Sensors

ACPower

Measures ac mains power and power-quality parameters for single-, split-, and three-phase 'Y' configurations. DO NOT CONNECT AC MAINS POWER DIRECTLY TO THE CR800.

Syntax

```
ACPower(DestAC, ConfigAC, LineFrq, ChanV, VMult, MaxVrms,
    ChanI, IMult, MaxIrms, Reps)
```

DANGER Ac mains power can kill. You are responsible for ensuring connections to ac mains power conforms to applicable electrical codes. Contact a Campbell Scientific application engineer for information on available isolation transformers.

CS616

Enables and measures a CS616 water content reflectometer.

Syntax

```
CS616(Dest, Reps, SEChan, Port, MeasPerPort, Mult, Offset)
```

CS7500

Communicates with the CS7500 open-path CO_2 and H_2O sensor. The CS7500 is the same product as the LI-COR LI-7500.

Syntax

```
CS7500(Dest, Reps, SDMAddress, Command)
```

CSAT3

Communicates with the CSAT3 three-dimensional sonic anemometer.

Syntax

```
CSAT3(Dest, Reps, SDMAddress, CSAT3Cmd, CSAT3Opt)
```

EC100

Communicates with the EC150 Open Path and EC155 Closed Path IR Gas Analyzers via SDM.

Syntax

```
EC100(Dest, SDMAddress, EC100Cmd)
```

EC100Configure

Configures the EC150 Open Path and EC155 Closed Path IR Gas Analyzers.

Syntax

```
EC100Configure(Result, SDMAddress, ConfigCmd, DestSource)
```

GPS

Used with a GPS device to keep the CR800 clock correct or provide other information from the GPS such as location and speed. Proper operation of this instruction may require a factory upgrade of on-board memory.

Syntax

```
GPS(GPS_Array, ComPort, TimeOffsetSec, MaxErrorMsec,
    NMEA_Sentences)
```

Note To change from the GPS default baud rate of 38400, specify the new baud rate in the **SerialOpen()** instruction.

HydraProbe

Reads the Stevens Vitel SDI-12 Hydra Probe sensor.

Syntax

```
HydraProbe(Dest, SourceVolts, ProbeType, SoilType)
```

LI7200

Communicates with the LI-COR LI-7200 open path CO_2 and H_2O sensor.

Syntax

```
LI7200(Dest, Reps, SDMAddress, Command)
```

LI7700

Communicates with the LI-COR LI-7700 open path CO_2 and H_2O sensor.

Syntax

```
LI7200(Dest, Reps, SDMAddress, Command)
```

TGA

Measures a TGA100A trace-gas analyzer system.

Syntax

```
TGA(Dest, SDMAddress, DataList, ScanMode)
```

Therm107

Measures a Campbell Scientific model 107 thermistor.

Syntax

```
Therm107(Dest, Reps, SEChan, Vx/ExChan, SettlingTime, Integ,
    Mult, Offset)
```

Therm108

Measures a Campbell Scientific model 108 thermistor.

Syntax

```
Therm108(Dest, Reps, SEChan, Vx/ExChan, SettlingTime, Integ,
    Mult, Offset)
```

Therm109

Measures a Campbell Scientific model 109 thermistor.

Syntax

```
Therm109(Dest, Reps, SEChan, Vx/ExChan, SettlingTime, Integ,
    Mult, Offset)
```

A.5.9.1 Wireless Sensor Network

ArrayIndex

Returns the index of a named element in an array.

Syntax

```
ArrayIndex(Name)
```

CWB100

Sets up the CR800 to request and accept measurements from the CWB100 wireless sensor base.

Syntax

```
CWB100(ComPort, CWSDest, CWSConfig)
```

CWB100Diagnostics

Sets up the CR800 to request and accept measurements from the CWB100 wireless sensor base.

Syntax

```
CWB100(ComPort, CWSDest, CWSConfig)
```

CWB100Routes

Returns diagnostic information from a wireless network.

Syntax

```
CWB100Diagnostics(CWBPort, CWSDiag)
```

CWB100RSSI

Polls wireless sensors in a wireless-sensor network for radio signal strength.

Syntax

```
CWB100RSSI(CWBPort)
```

A.5.10 Peripheral Device Support

Multiple SDM instructions can be used within a program.

AM25T

Controls the AM25T analog-voltage input multiplexer.

Syntax

```
AM25T(Dest, Reps, Range, AM25TChan, DiffChan, TCType, Tref,
    ClkPort, ResPort, VxChan, RevDiff, SettlingTime, Integ,
    Mult, Offset)
```

AVW200

Controls and collects *Vspect* (p. 506) data from an AVW200 vibrating-wire measurement device.

Syntax

```
AVW200(Result, ComPort, NeighborAddr, PakBusAddr, Dest,
    AVWChan, MuxChan, Reps, BeginFreq, EndFreq, ExVolt,
    Therm50_60Hz, Multiplier, Offset)
```

CDM_VW300Config

Configures the CDM-VW300 dynamic vibrating-wire spectrum analyzer.

Syntax

```
CDM_VW300Config(DeviceType, CPIAddress, SysOptions,
    ChanEnable, ResonAmp, LowFreq, HighFreq, ChanOptions,
    Mult, Offset, SteinA, SteinB, SteinC, RF_MeanBins,
    RF_AmpBins, RF_LowLim, RF_HighLim, RF_Hyst, RF_Form)
```

CDM_VW300Dynamic

Captures dynamic *Vspect* (p. 506) measurements from the CDM-VW300 dynamic vibrating-wire spectrum analyzer.

Syntax

```
CDM_VW300Dynamic(CPIAddress, DestFreq, DestDiag)
```

CDM_VW300Rainflow

Retrieves rainflow histogram data from the CDM-VW300 vibrating-wire measurement peripheral.

Syntax

```
CDM_VW300Rainflow(CPIAddress, RF1, RF2, RF3, RF4, RF5, RF6,
    RF7, RF8)
```

CDM_VW300Static

Retrieves static *Vspect* (p. 506) measurements from the CDM-VW300 vibrating-wire measurement device.

Syntax

```
CDM_VW300Static(CPIAddress, DestFreq, DestTherm, DestStdDev)
```

CPISpeed

Controls the speed of the CPI bus.

Syntax

```
CPISpeed(BitRate))
```

MuxSelect

Selects the specified channel on a multiplexer.

Syntax

```
MuxSelect(ClkPort, ResPort, ClkPulseWidth, MuxChan, Mode)
```

SDMAO4

Sets output voltage levels in an SDM-AO4 continuous-analog-output device.

Syntax

```
SDMAO4(Source, Reps, SDMAdress)
```

SDMAO4A

Sets output voltage levels in an SDM-AO4A continuous-analog-output device.

Syntax

```
SDMAO4A(Source, Reps, SDMAdress)
```

SDMCAN

Reads and controls an SDM-CAN interface.

Syntax

```
SDMCAN(Dest, SDMAddress, TimeQuanta, TSEG1, TSEG2, ID,
    DataType,
```

SDMCD16AC

Controls an SDM-CD16AC, SDM-CD16, or SDM-CD16D control device.

Syntax

```
SDMCD16AC(Source, Reps, SDMAddress)
```

SDMCD16Mask

Controls an SDM-CD16AC, SDM-CD16, or SDM-CD16D control device. Unlike the SDMCD16AC, it allows the CR800 to select the ports to activate via a mask. Commonly used with **TimedControl()**.

Syntax

```
SDMCD16Mask(Source, Mask, SDMAddress)
```

SDMCVO4

Control the SDM-CVO4 four-channel, current/voltage output device.

Syntax

```
SDMCVO4(CVO4Source, CVO4Reps, SDMAddress, CVO4Mode)
```

SDMGeneric

Sends commands to an SDM device that is otherwise unsupported in the operating system. See the appendix *Endianness* *(p. 619).*

Syntax

```
SDMGeneric(Dest, SDMAddress, CmdByte, NumvaluesOut, Source,
    NumValuesIn, BytesPerValue, BigEndian, DelayByte)
```

SDMINT8

Controls and reads an SDM-INT8 interval timer.

Syntax

```
SDMINT8(Dest, Address, Config8_5, Config4_1, Funct8_5,
    Funct4_1, OutputOpt, CaptureTrig, Mult, Offset)
```

SDMIO16

Sets up and measures an SDM-IO16 I/O expansion module.

Syntax

```
SDMIO16(Dest, Status, Address, Command, Mode Ports 16 to 13,
    Mode Ports 12 to 9, Mode Ports 8 to 5, Mode Ports 4 to 1,
    Mult, Offset)
```

SDMSIO4

Controls, transmits, and receives data from an SDM-SIO4 I/O expansion module.

Syntax

```
SDMSIO4(Dest, Reps, SDMAddress, Mode, Command, Param1,
    Param2, ValuesPerRep, Multiplier, Offset)
```

SDMSpeed

Changes the rate the CR800 uses to clock SDM device data.

Syntax

```
SDMSpeed(BitPeriod)
```

SDMSW8A

Controls and reads an SDM-SW8A switch-closure expansion module.

Syntax

```
SDMSW8A(Dest, Reps, SDMAddress, FunctOp, SW8AStartChan, Mult,
    Offset)
```

SDMTrigger

Synchronize when SDM measurements on all SDM devices are made.

Syntax

```
SDMTrigger
```

SDMX50

Controls the SDM-X50 coaxial multiplexer independent of the **TDR100()** instruction.

Syntax

```
SDMX50(SDMAddress, Channel)
```

TDR100

Measures TDR probes connected to the TDR100 time-domain reflectometer directly or through a SDMX50 coaxial multiplexer.

Syntax

```
TDR100(Dest, SDMAddress, Option, Mux/ProbeSelect, WaveAvg,
    Vp, Points, CableLength, WindowLength, ProbeLength,
    ProbeOffset, Mult, Offset)
```

TimedControl

Allows a sequence of fixed values and durations to be controlled by the SDM task sequencer. This enables SDM-CD16x control events to occur at a precise time. See the appendix *Relay Drivers — List* (p. 625).

Syntax.

```
TimedControl(Size, SyncInterval, IntervalUnits, DefaultValue,
    CurrentIndex, Source, ClockOption
```

A.6 PLC Control — Instructions

Related Topics:
- *PLC Control — Overview* (p. 74)
- *PLC Control — Details* (p. 237)
- *PLC Control Modules — Overview* (p. 349)
- *PLC Control Modules — Lists* (p. 624)
- *PLC Control — Instructions* (p. 536)
- Switched Voltage Output — Specifications
- *Switched Voltage Output — Overview* (p. 78)
- *Switched Voltage Output — Details* (p. 101)

See descriptions of the following instructions elsewhere in this appendix.

PortGet()
PortSet()
PulsePort()
ReadIO()
SDMAO4()
SDMAO4A()
SDMCD16AC()
SDMCD16Mask()
SDMCV04()
SDMIO16()
TimedControl()
ProcHiPri/EndProcHiPri
DNP()
DNPUpdate()
DNPVariable()
ModbusMaster()

ModbusSlave()

A.7 Processing and Math Instructions

A.7.1 Mathematical Operators

Note Program declaration **AngleDegrees()** (see *Program Declarations* *(p. 511))* sets math functions to use degrees instead of radians.

A.7.2 Arithmetic Operators

Table 130. Arithmetic Operators

Symbol	*Name*	*Notes*
^	Raise to power	Result is always promoted to a *FLOAT* *(p. 159)* data type to avoid problems that may occur when raising an integer to a negative power. However, loss of precision occurs if result is > 24 bits. For example, **(46340 ^ 2)** will yield **2,147,395,584** (not precisely correct), whereas **(46340 * 46340)** will yield **2,147,395,600** (precisely correct) Simply use repeated multiplications instead of ^ operators when full 32-bit precision is required. Same functionality as **PWR()** *(p. 542)* instruction.
*	Multiply	
/	Divide	Use **INTDV()** *(p. 542)* to retain 32-bit precision
+	Add	
-	Subtract	
=	Equal to	
<>	Not equal to	
>	Greater than	
<	Less than	
>=	Greater than or equal to	
<=	Less than or equal to	

A.7.3 Bitwise Operations

Bitwise shift operators (<< and >>) allow CRBasic to manipulate the position of bits within a variable declared **As Long** (integer). Following are example expressions and expected results:

- **&B00000001** << **1** produces **&B00000010** (decimal **2**)

- **&B00000010 << 1** produces **&B00000100** (decimal **4**)
- **&B11000011 << 1** produces **&B10000110** (decimal **134**)
- **&B00000011 << 2** produces **&B00001100** (decimal **12**)
- **&B00001100 >> 2** produces **&B00000011** (decimal **3**)

The result of these operators is the value of the left-hand operand with all of its bits moved by the specified number of positions. The resulting "holes" are filled with zeros.

Smart sensors, or a communication protocol, may output data that are compressed into integers that are composites of "packed" fields. This type of data compression is a tactic to conserve memory and communication bandwidth. Following is an example of data compressed into an eight-byte integer:

A packed integer that is stored in variable ***input_val*** will be unpacked into three integers individually stored in ***value_1***, ***value_2***, and ***value_3***. In the packed integer, the information that is unpacked into ***value_1*** is stored in bits 7 and 6, ***value_2*** is unpacked from bits 5 and 4, and ***value_3*** from bits 3, 2, 1, and 0. The CRBasic code to do this unpacking routine is shown in CRBasic example *Using Bit-Shift Operators* (p. 538).

With unsigned integers, shifting left is equivalent to multiplying by two. Shifting right is equivalent to dividing by two.

The operators follow:

<<

Bitwise left shift

Syntax

```
Variable = Numeric Expression << Amount
```

>>

Bitwise right shift

Syntax

```
Variable = Numeric Expression >> Amount
```

&

Bitwise AND assignment — performs a bitwise AND of a variable with an expression and assigns the result back to the variable.

CRBasic Example 69. Using Bit-Shift Operators

```
'This program example demonstrates the unpacking of a packed integer.  The binary value in
'variable input_val is unpacked resulting in three integers individually stored in variables
'value(1), value(2), and value(3).  The information that is unpacked into value(1) is stored
'in 'bits 7 to 6 of input_val, value(2) is unpacked from bits 5 to 4, and value(3) from bits
'3 to 0, zero being the LSB or least-significant bit.

Public input_val As Long = &B01100011
Public value(3) As Long
```

```
BeginProg

  'Unpack the input_val variable by masking all but the bit group of interest by using the
  'AND function then shift the bit group to the right until the right-most bit is in the
  'LSB position.  The result is the unpacked value in decimal.
  value(1) = (input_val AND &B11000000) >> 6
  value(2) = (input_val AND &B00110000) >> 4
  value(3) = (input_val AND &B00001111) 'Shifting not needed since right-most bit is already
                                        'in the LSB position.

EndProg
```

A.7.4 Compound-Assignment Operators

Table 131. Compound-Assignment Operators

Symbol	Name	Function
^=	Exponent assignment	Raises the value of a variable to the power of an expression and assigns the result back to the variable.
*=	Multiplication assignment	Multiplies the value of a variable by the value of an expression and assigns the result to the variable.
+=	Addition assignment	Adds the value of an expression to the value of a variable and assigns the result to the variable. Also concatenates a string expression to a variable declared as STRING data type. Assigns the result to the variable. See CRBasic example *Concatenation of Numbers and Strings* (p. 277).
-=	Subtraction assignment	Subtracts the value of an expression from the value of a variable and assigns the result to the variable.
/=	Division assignment	Divides the value of a variable by the value of an expression and assigns the result to the variable.
\=	Division integer assignment	Divides the value of a variable by the value of an expression and assigns the integer result to the variable.

A.7.5 Logical Operators

AND

Performs a logical conjunction on two expressions.

Syntax

```
result = expr1 AND expr2
```

EQV

Performs a logical equivalence on two expressions.

Syntax

```
result = expr1 EQV expr2
```

NOT

Performs a logical negation on an expression.

Syntax

```
result = NOT expression
```

OR

Performs a logical disjunction on two expressions.

Syntax

```
result = expr1 OR expr2
```

XOR

Performs a logical exclusion on two expressions.

Syntax

```
result = expr1 XOR expr2
```

IIF

Evaluates a variable or expression and returns one of two results based on the outcome of that evaluation.

Syntax

```
Result = IIF (Expression, TrueValue, FalseValue)
```

IMP

Performs a logical implication on two expressions.

Syntax

```
result = expression1 IMP expression2
```

A.7.6 Trigonometric Functions

A.7.6.1 Intrinsic Trigonometric Functions

ACOS

Returns the arccosine of a number.

Syntax

```
x = ACOS(source)
```

ASIN

Returns the arcsin of a number.

Syntax

```
x = ASIN(source)
```

ATN

Returns the arctangent of a number.

Syntax

```
x = ATN(source)
```

ATN2

Returns the arctangent of y / x.

Syntax

```
x = ATN(y , x)
```

COS

Returns the cosine of an angle specified in radians.

Syntax

```
x = COS(source)
```

COSH

Returns the hyperbolic cosine of an expression or value.

Syntax

```
x = COSH(source)
```

SIN

Returns the sine of an angle.

Syntax

```
x = SIN(source)
```

SINH

Returns the hyperbolic sine of an expression or value.

Syntax

```
x = SINH(Expr)
```

TAN

Returns the tangent of an angle.

Syntax

```
x = TAN(source)
```

TANH

Returns the hyperbolic tangent of an expression or value.

Syntax

```
x = TANH(Source)
```

A.7.6.2 Derived Trigonometric Functions

Table *Derived Trigonometric Functions* (p. 542) lists trigonometric functions that can be derived from intrinsic trigonometric functions.

Table 132. Derived Trigonometric Functions

Function	*CRBasic Equivalent*
Secant	Sec = 1 / Cos(X)
Cosecant	Cosec = 1 / Sin(X)
Cotangent	Cotan = 1 / Tan(X)
Inverse Secant	Arcsec = Atn(X / Sqr(X * X - 1)) + Sgn(Sgn(X) - 1) * 1.5708
Inverse Cosecant	Arccosec = Atn(X / Sqr(X * X - 1)) + (Sgn(X) - 1) * 1.5708
Inverse Cotangent	Arccotan = Atn(X) + 1.5708
Hyperbolic Secant	HSec = 2 / (Exp(X) + Exp(-X))
Hyperbolic Cosecant	HCosec = 2 / (Exp(X) - Exp(-X))
Hyperbolic Cotangent	HCotan = (Exp(X) + Exp(-X)) / (Exp(X) - Exp(-X))
Inverse Hyperbolic Sine	HArcsin = Log(X + Sqr(X * X + 1))
Inverse Hyperbolic Cosine	HArccos = Log(X + Sqr(X * X - 1))
Inverse Hyperbolic Tangent	HArctan = Log((1 + X) / (1 - X)) / 2
Inverse Hyperbolic Secant	HArcsec = Log((Sqr(-X * X + 1) + 1) / X)
Inverse Hyperbolic Cosecant	HArccosec = Log((Sgn(X) * Sqr(X * X + 1) + 1) / X)
Inverse Hyperbolic Cotangent	HArccotan = Log((X + 1) / (X - 1)) / 2

A.7.7 Arithmetic Functions

ABS

Returns the absolute value of a number. Returns a value of data type Long when the expression is type Long.

Syntax

```
x = ABS(source)
```

Ceiling

Rounds a value to a higher integer.

Syntax

```
variable = Ceiling(Number)
```

EXP

Returns e (the base of natural logarithms) raised to a power.

Syntax

```
x = EXP(source)
```

Floor

Rounds a value to a lower integer.

Syntax

```
variable = Floor(Number)
```

FRAC

Returns the fractional part of a number.

Syntax

```
x = FRAC(source)
```

INT or FIX

Return the integer portion of a number.

Syntax

```
x = INT(source)
x = Fix(source)
```

INTDV

Performs an integer division of two numbers.

Syntax

```
X INTDV Y
```

LN or LOG

Returns the natural logarithm of a number. Ln and Log perform the same function.

Syntax

```
x = LOG(source)
x = LN(source)
```

Note LOGN = LOG(X) / LOG(N)

LOG10

The LOG10 function returns the base-ten logarithm of a number.

Syntax

```
x = LOG10 (number)
```

MOD

Modulo divide. Divides one number into another and returns only the remainder.

Syntax

```
result = operand1 MOD operand2
```

PWR

Performs an exponentiation on a variable. Same functionality as ^ operator. See section *Arithmetic Operators* *(p. 537).*

Syntax

```
PWR(X, Y)
```

RectPolar

Converts from rectangular to polar coordinates.

Syntax

```
RectPolar(Dest, Source)
```

Round

Rounds a value to a higher or lower number.

Syntax

```
variable = Round (Number, Decimal)
```

SGN

Finds the sign value of a number.

Syntax

```
x = SGN(source)
```

Sqr

Returns the square root of a number.

Syntax

```
x = SQR(number)
```

A.7.8 Integrated Processing

DewPoint

Calculates dew-point temperature (°C) from dry bulb temperature and relative humidity.

Syntax

```
DewPoint(Dest, Temp, RH)
```

PRT

Calculates temperature (°C) from the resistance of an RTD. This instruction has been superseded by **PRTCalc()** in most applications.

Syntax

```
PRT(Dest, Reps, Source, Mult)
```

PRTCalc

Calculates temperature from the resistance of an RTD according to a range of alternative standards, including IEC. Supercedes **PRT()** in most applications.

Syntax

```
PRTCalc(Dest, Reps, Source, PRTType, Mult, Offset)
```

SolarPosition

Calculates solar position.

Syntax

```
SolarPosition(Dest, Time, UTC_OFFSET, Lat_c, Lon_c, Alt_c,
    Pressure, AirTemp)
```

SatVP

Calculates saturation-vapor pressure (kPa) from temperature.

Syntax

```
SatVP(Dest, Temp)
```

StrainCalc

Converts the output of a bridge-measurement instruction to microstrain.

Syntax

```
StrainCalc(Dest, Reps, Source, BrZero, BrConfig, GF, v)
```

VaporPressure

Calculates vapor pressure from temperature and relative humidity.

Syntax

```
VaporPressure(Dest, Temp, RH)
```

WetDryBulb

Calculates vapor pressure (kPa) from wet- and dry-bulb temperatures and barometric pressure.

Syntax

```
WetDryBulb(Dest, DryTemp, WetTemp, Pressure)
```

A.7.9 Spatial Processing

AvgSpa

Computes the spatial average of the values in the source array.

Syntax

```
AvgSpa(Dest, Swath, Source)
```

CovSpa

Computes the spatial covariance of sets of data.

Syntax

```
CovSpa(Dest, NumOfCov, SizeOfSets, CoreArray, DatArray)
```

FFTSpa

Performs a **F**ast **F**ourier **T**ransform on a time series of measurements.

Syntax

```
FFTSpa(Dest, N, Source, Tau, Units, Option)
```

MaxSpa

Finds the maximum value in an array.

Syntax

```
MaxSpa(Dest, Swath, Source)
```

MinSpa

Finds the minimum value in an array.

Syntax

```
MinSpa(Dest, Swath, Source)
```

RMSSpa

Computes the RMS (root mean square) value of an array.

Syntax

```
RMSSpa(Dest, Swath, Source)
```

SortSpa

Sorts the elements of an array in ascending order.

Syntax

```
SortSpa(Dest, Swath, Source)
```

StdDevSpa

Finds the standard deviation of an array.

Syntax

```
StdDevSpa(Dest, Swath, Source)
```

A.7.10 Other Functions

AddPrecise

Enables high-precision totalizing of variables or manipulation of high-precision variables in conjunction with **MovePrecise**.

Syntax

```
AddPrecise(PrecisionVariable, X)
```

AvgRun

Stores a running average of a measurement.

Syntax

```
AvgRun(Dest, Reps, Source, Number)
```

Note AvgRun() should not be inserted within a **For** / **Next** construct with the *Source* and *Dest* parameters indexed and *Reps* set to 1. In essence, doing so will perform a single running average, using the values of the different elements of the array, instead of performing an independent running average on each element of the array. The results will be a running average of a spatial average on the various source array elements.

Randomize

Initializes the random-number generator.

Syntax

```
Randomize(source)
```

RND

Generates a random number.

Syntax

```
RND(source)
```

TotalRun

Outputs a running total of a measurement.

Syntax

```
TotalRun(Dest, Reps, Source, Number, RunReset)
```

A.7.10.1 Histograms

Histogram

Processes input data as either a standard histogram (frequency distribution) or a weighted-value histogram.

Syntax

```
Histogram(BinSelect, DataType, DisableVar, Bins, Form, WtVal,
    LoLim, UpLim)
```

Histogram4D

Processes input data as either a standard histogram (frequency distribution) or a weighted-value histogram of up to four dimensions.

Syntax

```
Histogram4D(BinSelect, Source, DataType, DisableVar, Bins1,
    Bins2, Bins3, Bins4, Form, WtVal, LoLim1, UpLim1, LoLim2,
    UpLim2, LoLim3, UpLim3, LoLim4, UpLim4)
```

LevelCrossing

Processes data into a one- or two-dimensional histogram using a level-crossing counting algorithm.

Syntax

```
LevelCrossing(Source, DataType, DisableVar, NumLevels,
    2ndDim, CrossingArray, 2ndArray, Hysteresis, Option)
```

RainFlow

Processes data with the Rainflow counting algorithm, essential to estimating cumulative damage fatigue to components undergoing stress / strain cycles. See Downing S. D., Socie D. F. (1982) Simple Rainflow Counting Algorithms. International Journal of Fatigue Volume 4, Issue 1.

Syntax

```
RainFlow(Source, DataType, DisableVar, MeanBins, AmpBins,
    Lowlimit, Highlimit, MinAmp, Form)
```

A.8 String Functions

Related Topics
- *String Operations* (p. 275)

& Concatenates string variables.
+ Concatenates string and numeric variables.
- Compares two strings, returns zero if identical.

A.8.1 String Operations

Table 133. String Operations

Operation	*Notes*
String constants	Constant strings can be used in expressions using quotation marks. For example: `FirstName = "Mike"`
String addition	Strings can be concatenated using the '+' operator. For example: `FullName = FirstName + " " + MiddleName + " " + LastName`
String subtraction	**String1**-**String2** results in an integer in the range of **–255** to **+255**.
String conversion to/from Numerics	Conversion of strings to numerics and numerics to strings is done automatically when an assignment is made from a string to a numeric or a numeric to a string, if possible.
String comparison operators	The comparison operators =, >,<,<>, >= and <= operate on strings.
String final-data output processing	The **Sample()** instruction will convert data types if the source data type is different than the **Sample()** data type. Strings are disallowed in all output processing instructions except **Sample()**.

A.8.2 String Commands

ArrayLength

Returns the length of a variable array.

Syntax

```
ArrayLength(Variable)
```

ASCII

Returns the ASCII / ANSI code of a character in a string.

Syntax

```
Variable = ASCII(ASCIIString(1,1,X))
```

CheckSum

Returns a checksum signature for the characters in a string.

Syntax

```
Variable = CheckSum(ChkSumString, ChkSumType, ChkSumSize)
```

CHR

Inserts an ANSI character into a string.

Syntax

```
CHR(Code)
```

Erase

Clears all bytes in a variable or variable array.

Syntax

```
Erase(EraseVar)
```

FormatFloat

Converts a floating-point value into a string. Replaced by **SPrintF()**.

Syntax

```
String = FormatFloat(Float, FormatString)
```

FormatLong

Converts a LONG value into a string. Replaced by **SPrintF()**.

Syntax

```
String = FormatLong(Long, FormatString)
```

FormatLongLong

Converts a 64-bit LONG integer into a decimal value in the format of a string variable.

Syntax

```
FormatLongLong(LongLongVar(1))
```

HEX

Returns a hexadecimal string representation of an expression.

Syntax

```
Variable = HEX(Expression)
```

HexToDec

Converts a hexadecimal string to a float or integer.

Syntax

```
Variable = HexToDec(Expression)
```

InStr

Finds the location of a string within a string.

Syntax

```
Variable = InStr(Start, SearchString, FilterString,
    SearchOption)
```

LTrim

Returns a copy of a string with no leading spaces.

Syntax

```
variable = LTrim(TrimString)
```

Left

Returns a substring that is a defined number of characters from the left side of the original string.

Syntax

```
variable = Left(SearchString, NumChars)
```

Len

Returns the number of bytes in a string.

Syntax

```
Variable = Len(StringVar)
```

LowerCase

Converts a string to all lowercase characters.

Syntax

```
String = LowerCase(SourceString)
```

Mid

Returns a substring that is within a string.

Syntax

```
String = Mid(SearchString, Start, Length)
```

Replace

Searches a string for a substring and replaces that substring with a different string.

Syntax

```
variable = Replace(SearchString, SubString, ReplaceString)
```

Right

Returns a substring that is a defined number of characters from the right side of the original string.

Syntax

```
variable = Right(SearchString, NumChars)
```

RTrim

Returns a copy of a string with no trailing spaces.

Syntax

```
variable = RTrim(TrimString)
```

StrComp

Compares two strings by subtracting the characters in one string from the characters in another

Syntax

```
Variable = StrComp(String1, String2)
```

SplitStr

Splits out one or more strings or numeric variables from an existing string.

Syntax

```
SplitStr(SplitResult, SearchString, FilterString, NumSplit,
    SplitOption)
```

SPrintF

Converts data to formatted strings. Returns length of formatted string. Replaces **FormatFloat()** and **FormatLong()**.

Syntax

```
length = SPrintF(Destination, format,...)
```

Trim

Returns a copy of a string with no leading or trailing spaces.

Syntax

```
variable = Trim(TrimString)
```

UpperCase

Converts a string to all uppercase characters

Syntax

```
String = UpperCase(SourceString)
```

A.9 Time Keeping — Instructions

Related Topics:
- *Time Keeping — Overview* (p. 75)
- *Time Keeping — Instructions* (p. 552)

Within the CR800, time is stored as integer seconds and nanoseconds into the second since midnight, January 1, 1990.

ClockChange

Returns milliseconds of clock change due to any setting of the clock that occurred since the last execution of **ClockChange**.

Syntax

```
variable = ClockChange
```

ClockReport

Sends the CR800 clock value to a remote datalogger in the PakBus network.

Syntax

```
ClockReport(ComPort, RouterAddr, PakBusAddr)
```

ClockSet

Sets the CR800 clock from the values in an array.

Syntax

```
ClockSet(Source)
```

DaylightSaving

Defines daylight saving time. Determines if daylight saving time has begun or ended. Optionally advances or turns back the CR800 clock one hour.

Syntax

```
variable = DaylightSaving(DSTSet, DSTnStart, DSTDayStart,
    DSTMonthStart, DSTnEnd, DSTDayEnd, DSTMonthEnd, DSTHour)
```

DaylightSavingUS

Determine if US daylight saving time has begun or ended. Optionally advance or turn back the CR800 clock one hour.

Syntax

```
variable = DaylightSavingUS(DSTSet)
```

IfTime

Returns a number indicating **True** (**-1**) or **False** (**0**) based on the CR800 real-time clock.

Syntax

```
If (IfTime(TintoInt, Interval, Units)) Then

-or-

Variable = IfTime(TintoInt, Interval, Units)
```

PakBusClock

Sets the CR800clock to the clock of the specified PakBus device.

Syntax

```
PakBusClock(PakBusAddr)
```

RealTime

Parses year, month, day, hour, minute, second, micro-second, day of week, and/or day of year from the CR800 clock.

Syntax

```
RealTime(Dest)
```

SecsSince1990

Returns seconds elapsed since 1990. Data type is LONG. Used with **GetRecord()**.

Syntax

```
SecsSince1990(date, option)
```

TimeIntoInterval

Returns a number indicating **True** (**-1**) or **False** (**0**) based on the datalogger real-time clock.

Syntax

```
Variable = TimeIntoInterval(TintoInt, Interval, Units)

-or-

If TimeIntoInterval(TintoInt, Interval, Units)
```

TimeIsBetween

Determines if the CR800 real-time clock falls within a range of time.

Syntax

```
TimeIsBetween(BeginTime, EndTime, Interval, Units)
```

Timer

Returns the value of a timer.

Syntax

```
variable = Timer(TimNo, Units, TimOpt)
```

A.10 Voice-Modem Instructions

Note Refer to Campbell Scientific voice-modem manuals available at *www.campbellsci.com/manuals* (*http://www.campbellsci.com/manuals*).

DialVoice

Defines the dialing string for a COM310 voice modem.

Syntax

```
DialVoice(DialString)
```

VoiceBeg / EndVoice

Marks the beginning and ending of voice code that is executed when the CR800 detects a ring from a voice modem.

Syntax

```
VoiceBeg
  [voice code to be executed]
EndVoice
```

VoiceHangup

Hangs up the voice modem.

Syntax

```
VoiceHangup
```

VoiceKey

Recognizes the return of characters **1** to **9**, *****, or **#**. Often used to add a delay, which provides time for the message to be spoken, in a **VoiceBegin**/**EndVoice** sequence.

Syntax

```
VoiceKey(TimeOut*IDH_Popup_VoiceKey_Timeout)
```

VoiceNumber

Returns one or more numbers (1 to 9) terminated by the # or * key.

Syntax

```
VoiceNumber(TimeOut*IDH_POPUP_VoiceKey_Timeout)
```

VoicePhrases

Provides a list of phrases for **VoiceSpeak()**.

Syntax

```
VoicePhrases(PhraseArray, Phrases)
```

VoiceSetup

Controls the hang-up of the COM310 voice modem.

Syntax

```
VoiceSetup(HangUpKey, ExitSubKey, ContinueKey, SecsOnLine,
    UseTimeout, CallOut)
```

VoiceSpeak

Defines the voice string that should be spoken by the voice modem.

Syntax

```
VoiceSpeak("String" + Variable + "String"…, Precision)
```

A.11 Custom Menus — Instructions

Related Topics:
- *Custom Menus — Overview* (p. 83, p. 555)
- *Data Displays: Custom Menus — Details* (p. 180)
- *Custom Menus — Instruction Set* (p. 555)
- *Keyboard Display — Overview* (p. 82)
- *CRBasic Editor Help* for **DisplayMenu()**

Custom menus are constructed with the following syntax before the **BeginProg** instruction.

```
DisplayMenu("MenuName", AddToSystem)
  MenuItem("MenuItemName", Variable)
  MenuPick(Item1, Item2, Item3...)
  DisplayValue("MenuItemName", tablename.fieldname)
  SubMenu(MenuName)
    MenuItem("MenuItemName", Variable)
  EndSubMenu
EndMenu

BeginProg
  [program body]
EndProg
```

DisplayLine

Displays a full line of read-only text in a custom menu.

Syntax:

```
DisplayLine(Value)
```

DisplayMenu / EndMenu

Marks the beginning and ending of a custom menu.

Syntax:

```
DisplayMenu("MenuName", AddToSystem)
  [menu definition]
EndMenu
```

DisplayValue

Defines the name and associated data-table value or variable for an item in a custom menu.

Syntax:

```
DisplayValue("MenuItemName", Expression)
```

MenuItem

Defines the name and associated measurement value for an item in a custom menu.

Syntax:

```
MenuItem("MenuItemName", Variable)
```

MenuPick

Creates a list of selectable options that can be used when editing a **MenuItem()** value.

Syntax:

```
MenuPick(Item1, Item2, Item3...)
```

MenuRecompile

Creates a custom menu item for recompiling a program after making changes to one or more **ConstTable()** values.

Syntax

```
MenuRecompile("CompileString", CompileVar)
```

SubMenu / EndSubMenu

Define the beginning and ending of a second-level menu for a custom menu.

Syntax:

```
DisplayMenu("MenuName", 100)
  SubMenu("MenuName")
    [menu definition]
  EndSubMenu
EndMenu
```

A.12 Serial Input / Output

Read More See *Serial I/O* *(p. 238).*

MoveBytes

Moves binary bytes of data into a different memory location when translating big-endian to little-endian data. See the appendix *Endianness* *(p. 619).*

Syntax

```
MoveBytes(Destination, DestOffset, Source, SourceOffset,
    NumBytes)
```

SerialBrk

Sends a break signal with a specified duration to a CR800 serial port.

Syntax

```
SerialBrk(Port, Duration)
```

SerialClose

Closes a communication port that was previously opened by **SerialOpen()**.

Syntax

```
SerialClose(ComPort)
```

SerialFlush

Clears any characters in the serial input buffer.

Syntax

```
SerialFlush(ComPort)
```

SerialIn

Sets up a communication port for receiving incoming serial data.

Syntax

```
SerialIn(Dest, ComPort, TimeOut, TerminationChar,
    MaxNumChars)
```

SerialInBlock

Stores incoming serial data. This function returns the number of bytes received.

Syntax

```
SerialInBlock(ComPort, Dest, MaxNumberBytes)
```

SerialInChk

Returns the number of characters available in the datalogger serial buffer.

Syntax

```
SerialInChk(ComPort)
```

SerialInRecord

Reads incoming serial data on a COM port and stores the data in a destination variable.

Syntax

```
SerialInRecord(COMPort, Dest, BeginWord, NBytes, EndWord,
    NBytesReturned, LoadNAN)
```

SerialOpen

Sets up a datalogger port for communication with a non-PakBus device.

Syntax

```
SerialOpen(ComPort, BaudRate, Format, TXDelay, BufferSize)
```

SerialOut

Transmits a string over a datalogger communication port.

Syntax

```
SerialOut(ComPort, OutString, WaitString, NumberTries,
    TimeOut)
```

SerialOutBlock

Send binary data out a communication port. Supports transparent serial talk-through.

Syntax

```
SerialOutBlock(ComPort, Expression, NumberBytes)
```

A.13 Peer-to-Peer PakBus® Communications

Related Topics:
- *PakBus® Communications — Overview* (p. 88)
- *PakBus® Communications — Details* (p. 372)
- *PakBus® Communications — Instructions* (p. 558)
- *PakBus Networking Guide* (available at *www.campbellsci.com/manuals* (*http://www.campbellsci.com/manuals*))

PakBus is a proprietary networking communication protocol designed to optimize communications between Campbell Scientific dataloggers and peripherals. PakBus features auto-discovery and self-healing. Following is a list of CRBasic instructions that control PakBus processes. Some PakBus instructions specify a PakBus address (***PakBusAddr***) or a COM port (***ComPort***). ***PakBusAddr*** can be a CRBasic variable. ***ComPort*** is a constant. ***ComPort*** arguments are as follows:

- **ComRS232**
- **ComME**
- **Com310**
- **ComSDC7**
- **ComSDC8**
- **ComSDC10**
- **ComSDC11**
- **Com1** (C1,C2)
- **Com2** (C3,C4)
- **Com32** – **Com46** (available when using a one-channel I/O expansion module. See the appendix *Serial I/O Modules List* (p. 622))

Baud rate on asynchronous ports (ComRS232, ComME, Com1, Com2, and Com32 to Com46) default to 9600 unless set otherwise in the **SerialOpen()**

instruction, or if the port is opened by an incoming PakBus packet at some other baud rate. See table *Asynchronous Port Baud Rates* (p. 562).

In general, PakBus instructions write a result code to a variable indicating success or failure. Success sets the result code to **0**. Otherwise, the result code increments. If communication succeeds, but an error is detected, a negative result code is set. See *CRBasic Editor Help* for an explanation of error codes. For instructions returning a result code, retries can be coded with CRBasic logic as shown in the following code snip:

```
For I = 1 to 3
  GetVariables(ResultCode,….)
  If ResultCode = 0 Exit For
Next
```

The ***Timeout*** argument is entered in units of hundredths (0.01) of seconds. If **0** is entered, then the default timeout, defined by the time of the best route, is used. Use *PakBusGraph* (p. 630) **Hop Metrics** to calculate this time. Because these communication instructions wait for a response or timeout before the program moves on to the next instruction, they should be used in a *slow sequence* (p. 155). A slow sequence will not interfere execution of the main scan or other slow sequences. Optionally, the ***ComPort*** parameter can be entered preceded by a dash, for example, ***-ComME***, which will cause the instruction not to wait for a response or timeout. This will make the instruction execute faster; however, any data that it retrieves, and the result code, will be posted only after the communication is complete.

AcceptDataRecords

Sets up a CR800 to accept and store records from a remote PakBus datalogger.

Syntax

```
AcceptDataRecords(PakBusAddr, TableNo, DestTableName)
```

Broadcast

Sends a broadcast message to a PakBus network.

Syntax

```
Broadcast(ComPort, Message)
```

ClockReport

Sends the datalogger clock value to a remote datalogger in the PakBus network.

Syntax

```
ClockReport(ComPort, RouterAddr, PakBusAddr)
```

DataGram

Initializes a SerialServer / DataGram / PakBus application in the datalogger when a program is compiled.

Syntax

```
DataGram(ComPort, BaudRate, PakBusAddr, DestAppID, SrcAppID)
```

DialSequence / EndDialSequence

Defines the code necessary to route packets to a PakBus device.

Syntax

```
DialSequence(PakBusAddr)
  DialSuccess = DialModem(ComPort, DialString, ResponseString)
EndDialSequence(DialSuccess)
```

EncryptExempt

Defines one or more PakBus addresses to which the datalogger will not send encrypted PakBus messages, even though PakBus encryption is enabled.

Syntax

```
EncryptExempt(BeginPakBusAddr, EndPakBusAddr)
```

GetDataRecord

Retrieves the most recent record from a data table in a remote PakBus datalogger and stores the record in the CR800.

Syntax

```
GetDataRecord(ResultCode, ComPort, NeighborAddr, PakBusAddr,
    Security, Timeout, Tries, TableNo, DestTableName)
```

Note CR200, CR510PB, CR10XPB, and CR23XPB dataloggers do not respond to a GetDataRecord request from other PakBus dataloggers.

GetFile

Gets a file from another PakBus datalogger.

Syntax

```
GetFile(ResultCode, ComPort, NeighborAddr, PakBusAddr,
    Security, TimeOut, "LocalFile", "RemoteFile")
```

GetVariables

Retrieves values from a variable or variable array in a data table of a PakBus datalogger.

Syntax

```
GetVariables(ResultCode, ComPort, NeighborAddr, PakBusAddr,
    Security, TimeOut, "TableName", "FieldName", Variable,
    Swath)
```

Network

In conjunction with **SendGetVariables**, configures destination dataloggers in a PakBus network to send and receive data from the host.

Syntax

```
Network(ResultCode, Reps, BeginAddr, TimeIntoInterval,
    Interval, Gap, GetSwath, GetVariable, SendSwath,
    SendVariable)
```

PakBusClock

Sets the datalogger clock to the clock of the specified PakBus device.

Syntax

```
PakBusClock(PakBusAddr)
```

Route

Returns the neighbor address of (or the route to) a PakBus datalogger.

Syntax

```
variable = Route(PakBusAddr)
```

RoutersNeighbors

Returns a list of all PakBus routers and their neighbors known to the CR800.

Syntax

```
RoutersNeighbors(DestArray(MaxRouters, MaxNeighbors+1))
```

Routes

Returns a list of known dynamic routes for a PakBus datalogger that has been configured as a router in a PakBus network.

Syntax

```
Routes(Dest)
```

SendData

Sends the most recent record from a data table to a remote PakBus device.

Syntax

```
SendData(ComPort, RouterAddr, PakBusAddr, DataTable)
```

SendFile

Sends a file to another PakBus datalogger.

Syntax

```
SendFile(ResultCode, ComPort, NeighborAddr, PakBusAddr,
    Security, TimeOut, "LocalFile", "RemoteFile")
```

SendGetVariables

Sends an array of values to the host PakBus datalogger, and retrieves an array of data from the host datalogger.

Syntax

```
SendGetVariables(ResultCode, ComPort, RouterAddr, PakBusAddr,
    Security, TimeOut, SendVariable, SendSwath, GetVariable,
    GetSwath)
```

SendTableDef

Sends the table definitions from a data table to a remote PakBus device.

Syntax

```
SendTableDef(ComPort, RouterAddr, PakBusAddr, DataTable)
```

SendVariables

Sends value(s) from a variable or variable array to a data table in a remote datalogger.

Syntax

```
SendVariables(ResultCode, ComPort, RouterAddr, PakBusAddr,
    Security, TimeOut, "TableName", "FieldName", Variable,
    Swath)
```

StaticRoute

Defines a static route to a PakBus datalogger.

Syntax

```
StaticRoute(ComPort, NeighborAddr, PakBusAddr)
```

TimeUntilTransmit

Returns the time remaining, in seconds, before communication with the host datalogger.

Syntax

```
variable = TimeUntilTransmit
```

Table 134. Asynchronous-Port Baud Rates

Rate	*Notes*
-nnnn (autobaud[1] starting at nnnn) 0	autobaud[1] starting at nnnn autobaud starting at 9600
300 1200 4800	
9600	default
19200 38400 57600 115200	

[1] Autobaud: measurements are made on the communication signal and the baud rate is determined by the CR800.

A.14 Variable Management

ArrayIndex

Returns the index of a named element in an array.

Syntax

```
variable = ArrayIndex(Name)
```

ArrayLength

Returns the length of a variable array. In the case of variables of data type STRING, the total number of characters that the array of strings can hold is returned.

Syntax

```
ArrayLength(Variable)
```

Erase

Clears all bytes in a variable or variable array.

Syntax

```
Erase(EraseVar)
```

FindSpa

Searches a source array for a value and returns the position of the value in the array.

Syntax

```
FindSpa(SoughtLow, SoughtHigh, Step, Source)
```

Move

Moves the values in a range of variables into different variables or fills a range of variables with a constant.

Syntax

```
Move(Dest, DestReps, Source, SourceReps)
```

A.15 File Management

Commands to access and manage files stored in CR800 memory.

CalFile

Stores variable data, such as sensor calibration data, from a program into a non-volatile CR800 memory file. **CalFile()** pre-dates and is not used with the **FieldCal()** function.

Syntax

```
CalFile(Source/Dest, NumVals, "Device:filename", Option)
```

FileCopy

Copies a file from one drive to another.

Syntax

```
FileCopy(FromFileName, ToFileName)
```

FileClose

Closes a file handle created by **FileOpen()**.

Syntax

```
FileClose(FileHandle)
```

FileEncrypt

Performs an encrypting algorithm on the file. Allows distribution of CRBasic files without exposing source code.

Syntax

```
Boolean Variable = FileEncrypt(FileName)
```

FileList

Returns a list of files that exist on the specified drive.

Syntax

```
FileList(Drive,DestinationArray)
```

FileManage

Manages program files from within a running datalogger program.

Syntax

```
FileManage("Device: FileName", Attribute)
```

FileOpen

Opens an ASCII text file or a binary file for writing or reading.

Syntax

```
FileHandle = FileOpen("FileName", "Mode", SeekPoint)
```

FileRead

Reads a file referenced by FileHandle and stores the results in a variable or variable array.

Syntax

```
FileRead(FileHandle, Destination, Length)
```

FileReadLine

Reads a line in a file referenced by ***FileHandle*** and stores the result in a variable or variable array.

Syntax

```
FileReadLine(FileHandle, Destination, Length)
```

FileRename

Changes the name of file on a CR800 drive.

Syntax

```
FileRename(drive:OldFileName, drive:NewFileName)
```

FileSize

Returns the size of a file stored in CR800 memory.

Syntax

```
FileSize(FileHandle)
```

FileTime

Returns the time the file specified by the ***FileHandle*** was created.

Syntax

```
Variable = FileTime(FileHandle)
```

FileWrite

Writes ASCII or binary data to a file referenced in the program by ***FileHandle***.

Syntax

```
FileWrite(FileHandle, Source, Length)
```

Include

Inserts code from a file (***Filename***) at the position of the **Include()** instruction at compile time. **Include()** cannot be nested.

Syntax

```
Include("Device:Filename")
```

NewFile

Determines if a file stored on the CR800 has been updated since the instruction was last run. Typically used with image files.

Syntax

```
NewFile(NewFileVar, "FileName")
```

RunProgram

Calls a secondary CRBasic program file from the current active program.

Syntax

```
RunProgram("Device:FileName", Attrib)
```

A.16 Data-Table Access and Management

Commands to access and manage data stored in data tables, including **Public** and **Status** tables.

FileMark

Inserts a filemark into a data table.

Syntax

```
FileMark(TableName)
```

GetRecord

Retrieves one record from a data table and stores the results in an array. May be used with **SecsSince1990()**.

Syntax

```
GetRecord(Dest, TableName, RecsBack)
```

ResetTable

Used to reset a data table under program control.

Syntax

```
ResetTable(TableName)
```

SetSetting

Changes the value for a setting or a **Status** table field.

Syntax

```
SetSetting("FieldName", Value)
```

SetStatus

Changes the value for a setting or a **Status** table field.

Syntax

```
SetStatus("FieldName", Value)
```

TableName.EventCount

Returns the number of data storage events that have occurred for an event-driven data table.

Syntax

```
TableName.EventCount(1,1)
```

TableName.FieldName

Accesses a specific field from a record in a table

Syntax

```
TableName.FieldName(FieldNameIndex, RecordsBack)
```

TableName.Output

Determine if data was written to a specific data table the last time the data table was called.

Syntax

```
TableName.Output(1,1)
```

TableName.Record

Determines the record number of a specific data table record.

Syntax

```
TableName.Record(1,n)
```

TableName.TableFull

Indicates whether a fill-and-stop table is full or whether a ring-mode table has begun overwriting its oldest data.

Syntax

```
TableName.TableFull(1,1)
```

TableName.TableSize

Returns the number of records allocated for a data table.

Syntax

```
TableName.TableSize(1,1)
```

TableName.TimeStamp

Returns the time into an interval or a time stamp for a record in a specific data table.

Syntax

```
TableName.TimeStamp(m,n)
```

WorstCase

Saves one or more worst-case data-storage events into separate tables. Used in conjunction with **DataEvent()**.

Syntax

```
WorstCase(TableName, NumCases, MaxMin, Change, RankVar)
```

A.17 TCP/IP — Instructions

Related Topics:
- *TCP/IP — Overview* (p. 90)
- *TCP/IP — Details* (p. 402)
- *TCP/IP — Instructions* (p. 567)
- *TCP/IP Links — List* (p. 629)

These instructions address use of email, SMS, web pages, and other IP services. These services are available only when the CR800 is used with a network link-device that has the PPP/IP key enabled, such as when the CR800 IP stack is used.

DHCPRenew

Restarts DHCP on the ethernet interface.

Syntax

```
DHCPRenew
```

EMailRecv

Polls an SMTP server for email messages and stores the message portion of the email in a string variable.

Syntax

```
variable = EMailRecv("ServerAddr", "ToAddr", "FromAddr",
    "Subject", Message, "Authen", "UserName", "PassWord",
    Result)
```

EMailSend

Sends an email message to one or more email addresses via an SMTP server.

Syntax

```
variable = EMailSend("ServerAddr", "ToAddr", "FromAddr",
    "Subject", "Message", "Attach", "UserName", "PassWord",
    Result)
```

EthernetPower

Controls power state of all Ethernet devices.

Syntax

```
EthernetPower(state)
```

FTPClient

Sends or retrieves a file via FTP.

Syntax

```
Variable = FTPClient("IPAddress", "User", "Password",
    "LocalFileName", "RemoteFileName", PutGetOption)
```

HTTPGET

Sends a request to an HTTP server using the Get method.

Syntax

```
HTTPGET( URI, Response, Header)
```

HTTPOut

Defines a line of HTML code to be used in a datalogger-generated HTML file.

Syntax

```
WebPageBegin("WebPageName", WebPageCmd)
  HTTPOut("<p>html string to output " + variable + " additional
string to output</p>")
  HTTPOut("<p>html string to output " + variable + " additional
string to output</p>")
WebPageEnd
```

HTTPPOST

Sends files or text strings to a URL.

Syntax

```
HTTPPOST( URI, Contents, Response, Header)
```

HTTPPUT

Sends a request to the HTTP server to store the enclosed file/data under the supplied URI.

Syntax

```
HTTPPUT(URI, Contents, Response, Header, NumRecs, FileOption)
```

IPInfo

Returns the IP address of the specified datalogger interface into a string.

Syntax

```
Variable = IPInfo(Interface, Option )
```

IPNetPower

Controls power state of individual Ethernet devices.

Syntax

```
IPNetPower( IPInterface, State)
```

IPRoute

Sets the interface to be used (Ethernet or PPP) when the CR800 sends an outgoing packet and both interfaces are active.

Syntax

```
IPRoute(IPAddr, IPInterface)
```

IPTrace

Writes IP debug messages to a string variable.

Syntax

```
IPTrace(Dest)
```

NetworkTimeProtocol

Synchronizes the datalogger clock with an Internet time server.

Syntax

```
variable = NetworkTimeProtocol(NTPServer, NTPOffset,
    NTPMaxMSec)
```

PingIP

Pings IP address.

Syntax

```
variable = PingIP(IPAddress, Timeout)
```

PPPOpen

Establishes a PPP connection with a server.

Syntax

```
variable = PPPOpen
```

PPPClose

Closes an opened PPP connection with a server.

Syntax

```
variable = PPPClose
```

SNMPVariable

Defines a custom MIB (Management Information Base) hierarchy for SNMP.

Syntax

```
SNMPVariable(Name, OID, Type, Access, Valid)
```

TCPClose

Closes a TCP/IP socket that has been set up for communication.

Syntax

```
TCPClose(TCPSocket)
```

TCPOpen

Sets up a TCP/IP socket for communication.

Syntax

```
TCPOpen(IPAddr, TCPPort, TCPBuffer)
```

UDPDataGram

Sends packets of information via the UDP communication protocol.

Syntax

```
UDPDataGram(IPAddr, UDPPort, SendVariable, SendLength,
    RcvVariable, Timeout)
```

UDPOpen

Opens a port for transferring UDP packets.

Syntax

```
UDPOpen(IPAddr, UDPPort, UDPBuffsize)
```

WebPageBegin / WebPageEnd

Declares a web page that is displayed when a request for the defined HTML page comes from an external source.

Syntax

```
WebPageBegin("WebPageName", WebPageCmd)
  HTTPOut("<p>html string to output " + variable + " additional
string to output</p>")
  HTTPOut("<p>html string to output " + variable + " additional
string to output</p>")
WebPageEnd
```

XMLParse()

Reads and parses an XML file in the datalogger.

Syntax

```
XMLParse(XMLContent, XMLValue, AttrName, AttrNameSpace,
    ElemName, ElemNameSpace, MaxDepth, MaxNameSpaces)
```

A.18 Modem Control

Read More For help on datalogger-initiated telecommunication, see *Initiating Telecomms (Callback)* *(p. 371).*

DialModem

Sends a modem-dial string out a datalogger communication port.

Syntax

```
DialModem(ComPort, BaudRate, DialString, ResponseString)
```

ModemCallback

Initiates a call to a computer via a phone modem.

Syntax

```
ModemCallback(Result, COMPort, BaudRate, Security,
    DialString, ConnectString, Timeout, RetryInterval,
    AbortExp)
```

ModemHangup / EndModemHangup

Encloses code that should be run when a COM port hangs up communication.

Syntax

```
ModemHangup(ComPort)
  [instructions to be run upon hang-up]
EndModemHangup
```

A.19 SCADA

Read More See sections *DNP3* *(p. 387)* and *Modbus* *(p. 391).*

Modbus and DNP3 instructions run as process tasks.

DNP

Sets up a CR800 as a DNP slave (outstation/server) device. Third parameter is optional.

Syntax

```
DNP(ComPort, BaudRate, DisableLinkVerify)
```

DNPUpdate

Determines when the DNP slave will update arrays of DNP elements. Specifies the address of the DNP master to send unsolicited responses.

Syntax

```
DNPUpdate(DNPAddr)
```

DNPVariable

Sets up the DNP implementation in a DNP slave Campbell Scientific datalogger.

Syntax

```
DNPVariable(Array, Swath, Object, Variation, Class, Flag,
    Event Expression, Number of Events)
```

ModBusMaster

Sets up a datalogger as a ModBus master to send or retrieve data from a ModBus slave.

Syntax

```
ModBusMaster(ResultCode, ComPort, BaudRate, ModBusAddr,
    Function, Variable, Start, Length, Tries, TimeOut)
```

ModBusSlave

Sets up a CR800 as a ModBus slave device.

Syntax

```
ModBusSlave(ComPort, BaudRate, ModBusAddr, DataVariable,
    BooleanVariable)
```

A.20 Calibration Functions

Calibrate

Forces calibration of the analog measurement circuitry.

Syntax

```
Calibrate(Dest, Range) (parameters are optional)
```

FieldCal

Sets up the datalogger to perform a calibration on one or more variables in an array.

Syntax

```
FieldCal(Function, MeasureVar, Reps, MultVar, OffsetVar,
    Mode, KnownVar, Index, Avg)
```

FieldCalStrain

Sets up the datalogger to perform a zero or shunt calibration for a strain measurement.

Syntax

```
FieldCalStrain(Function, MeasureVar, Reps, GFAdj, ZeromV/V,
    Mode, KnownRS, Index, Avg, GFRaw, uStrainDest)
```

LoadFieldCal

Loads values from the .cal file into variables in the CR800.

Syntax

```
LoadFieldCal(CheckSig)
```

NewFieldCal

Triggers storage of calibration values when a new .cal file has been written.

Syntax

```
DataTable(TableName, NewFieldCal, Size)
  SampleFieldCal
EndTable
```

SampleFieldCal

Stores the values in the .cal file to a data table.

Syntax

```
DataTable(TableName, NewFieldCal, Size)
  SampleFieldCal
EndTable
```

A.21 Satellite Systems

Instructions for ARGOS, GOES, OMNISAT, and INMARSAT-C. Refer to satellite transmitter manuals available at *www.campbellsci.com/manuals* (*http://www.campbellsci.com/manuals*).

A.21.1 Argos

ArgosData

Specifies the data to be transmitted to the ARGOS satellite.

Syntax

```
ArgosData(ResultCode, ST20Buffer, DataTable, NumRecords,
    DataFormat)
```

ArgosDataRepeat

Sets the repeat rate for the **ArgosData()** instruction.

Syntax

```
ArgosDataRepeat(ResultCode, RepeatRate, RepeatCount,
    BufferArray)
```

ArgosError

Sends a **Get and Clear Error Message** command to the ARGOS transmitter.

Syntax

```
ArgosError(ResultCode, ErrorCodes)
```

ArgosSetup

Sets up the datalogger for transmitting data via an ARGOS satellite.

Syntax

```
ArgosSetup(ResultCode, ST20Buffer, DecimalID, HexadecimalID,
    Frequency)
```

ArgosTransmit

Initiates a single transmission to an ARGOS satellite when the instruction is executed.

Syntax

```
ArgosTransmit(ResultCode, ST20Buffer)
```

A.21.2 GOES

GOESData

Sends data to a Campbell Scientific GOES satellite data transmitter.

Syntax

```
GOESData(Dest, Table, TableOption, BufferControl, DataFormat)
```

GOESGPS

Stores GPS data from the GOES satellite into two variable arrays.

Syntax

```
GOESGPS(GoesArray1(6), GoesArray2(7))
```

GOESSetup

Programs a GOES transmitter for communications with the satellite.

Syntax

```
GOESSetup(ResultCode, PlatformID, MsgWindow, STChannel,
    STBaud, RChannel, RBaud, STInterval, STOffset, RInterval)
```

GOESStatus

Requests status and diagnostic information from a Campbell Scientific GOES satellite transmitter.

Syntax

```
GOESStatus(Dest, StatusCommand)
```

A.21.3 OMNISAT

OmniSatData

Sends a table of data to the OMNISAT transmitter for transmission via the GOES or METEOSAT satellite.

Syntax

```
OmniSatData(OmniDataResult, TableName, TableOption,
    OmniBufferCtrl, DataFormat)
```

OmniSatRandomSetup

Sets up the OMNISAT transmitter to send data over the GOES or METEOSAT satellite at a random transmission rate.

Syntax

```
OmniSatRandomSetup(ResultCodeR, OmniPlatformID, OmniChannel,
    OmniBaud, RInterval, RCount)
```

OmniSatStatus

Queries the OMNISAT transmitter for status information.

Syntax

```
OmniSatStatus(OmniStatusResult)
```

OmniSatSTSetup

Sets up the OMNISAT transmitter to send data over the GOES or METEOSAT satellite at a self-timed transmission rate.

Syntax

```
OmniSatSTSetup(ResultCodeST, ResultCodeTX, OmniPlatformID,
    OmniMsgWindow, OmniChannel, OmniBaud, STInterval,
    STOffset)
```

A.21.4 INMARSAT-C

INSATData

Sends a table of data to the OMNISAT-I transmitter for transmission via the INSAT-1 satellite.

Syntax

```
INSATData(ResultCode, TableName, TX_Window, TX_Channel)
```

INSATSetup

Configures the OMNISAT-I transmitter for sending data over the INSAT-1 satellite.

Syntax

```
INSATSetup(ResultCode, PlatformID, RFPower)
```

INSATStatus

Queries the transmitter for status information.

Syntax

```
INSATStatus(ResultCode)
```

A.22 User-Defined Functions

Function / Return / Exit Function / EndFunction

Creates a user-defined CRBasic instruction

Syntax

```
Function [optional parameters] As [optional data type]
  Return [optional expression]
  ExitFunction [optional]
EndFunction
```

Optional

Defines a list of optional parameters that can be passed into a subroutine or function.

Syntax

```
Function (FunctionName) Param1, Param2, Optional Param3,
    Param4
```

Appendix B. Status, Settings, and Data Table Information (Status/Settings/DTI)

Related Topics:
- *Status, Settings, and Data Table Information (Status/Settings/DTI)* (p. 577)
- *Common Uses of the Status Table* (p. 578)
- *Status Table as Debug Resource* (p. 461)

The **Status** table, CR800 settings, and the **DataTableInfo** table (collectively, **Status/Settings/DTI**) contain registers, settings, and information essential to setup, programming, and debugging of many advanced CR800 systems. Status/Settings/DTI are numerous. Note the following:

- All Status/Settings/DTI, except a handful, are accessible through a keyword. This discussion is organized around these keywords. Keywords and descriptions are listed alphabetically in sub-appendix *Status/Settings/DTI Descriptions (Alphabetical)* (p. 585).
- Status fields are read only (mostly). Some are resettable.
- Settings are read/write (mostly).
- DTI are read only.
- Directories in sub-appendix *Status/Settings/DTI Directories* (p. 578) list several groupings of keywords. Each keyword listed in these groups is linked to the relevant description.
- Some Status/Settings/DTI have multiple names depending on the interface used to access them.
- No single interface accesses all Status/Settings/DTI. Interfaces used for access include the following:

Table 135. Status/Setting/DTI: Access Points

Access Point	*Locate in...*
Settings Editor	*Device Configuration Utility*, *LoggerNet Connect screen*, *PakBus Graph*. See *Datalogger Support Software — Details* (p. 429).
Status	View as a data table in a *numeric monitor* (p. 495).
DataTableInfo	View as a data table in a *numeric monitor* (p. 495).
Station Status	Menu item in *datalogger support software* (p. 631).
Edit Settings	Menu item in *PakBusGraph* software.
Settings	Menu item in CR1000KD Keyboard Display **Configure, Settings**
status.keyword/settings.keyword	Syntax in CRBasic program

[1] Information presented in **Station Status** is not updated automatically. Click the **Refresh** button to update.

Note Communication and processor bandwidth are consumed when generating the **Status** and **DataTableInfo** tables. If the CR800 is very tight on processing time, as may occur in very long or complex operations, retrieving the **Status** table repeatedly may cause *skipped scans* (p. 463).

B.1 Status/Settings/DTI Directories

Links in the following tables will help you navigate through the Status/Settings/DTI system:

Table 136. Status/Settings/DTI: Directories

Frequently Used (p. 578)	Communications, CPI	*Data* (p. 583)
Alphabetical Listing of Keywords (p. 579)	Communications, General	*Memory* (p. 583)
Status Table Entries (p. 580)	*Communications, PakBus* (p. 582)	*Miscellaneous* (p. 584)
Settings (General) (p. 581)	*Communications, TCP/IP I* (p. 582)	*Obsolete* (p. 584)
Settings (comport) (p. 582)	*Communications, TCP/IP II* (p. 583)	*OS and Hardware Versioning* (p. 584)
Settings (TCP/IP) (p. 581)	*Communications, TCP/IP III* (p. 583)	*Power Monitors* (p. 584)
Settings Only in Settings Editor (p. 582)	Communications, WiFi	*Security* (p. 584)
Data Table Information Table (DTI) (p. 582)	*CRBasic Program I* (p. 583)	*Signatures* (p. 584)
Auto-Calibration (p. 582)	*CRBasic Program II* (p. 583)	

Table 137. Status/Settings/DTI: Frequently Used

Action	*Status/Setting/DTI*	*Table Where Located*
Find the PakBus address of the CR800	*PakBusAddress* (p. 597)	**Communications, PakBus**
See messages pertaining to compilation of the CRBasic program running in the CR800	*CompileResults* (p. 588)	**CRBasic Program I**
Programming errors	*ProgErrors* (p. 600) *ProgSignature* (p. 600) *SkippedScan* (p. 603) *StartUpCode* (p. 603)	**CRBasic Program II**
Data tables	*DataFillDays()* (p. 589) *SkippedRecord()* (p. 603)	**Data**
Memory	*FullMemReset* (p. 590) *MemoryFree* (p. 596) *MemorySize* (p. 596)	**Memory**
Datalogger auto-resets	*WatchdogErrors* (p. 607)	**Miscellaneous**
Operating system	*OSDate* (p. 597) *OSSignature* (p. 597) *OSVersion* (p. 597)	**OS and Hardware Versioning**
Power	*Battery* (p. 585) *LithiumBattery* (p. 594) *Low12VCount* (p. 594)	**Power Monitors**

Table 138. Status/Settings/DTI: Alphabetical Listing of Keywords

B
Battery (p. 585)
Baudrate() (p. 585)
Beacon() (p. 586)
BuffDepth (p. 586)

C
CalDiffOffset() (p. 586)
CalGain() (p. 587)
CalSeOffset() (p. 587)
CentralRouters() (p. 587)
CommActive() (p. 587)
CommConfig() (p. 587)
CommsMemAlloc (p. 587)
CommsMemFree(1) (p. 588)
CommsMemFree(2) (p. 588)
CommsMemFree(3) (p. 588)
CompileResults (p. 588)
CPUDriveFree (p. 588)
CSIO1netEnable
CSIO2netEnable

E
ErrorCalib (p. 589)
EthernetEnable (p. 589)
EthernetPower (p. 590)

F
FilesManager (p. 590)
FTPEnabled (p. 590)
FTPPassword (p. 590)
FTPPort (p. 590)
FTPUserName (p. 590)
FullMemReset (p. 590)

H
HTTPEnabled (p. 591)
HTTPPort (p. 591)

I
IncludeFile (p. 591)
IPAddressCSIO() (p. 591)
IPAddressEth (p. 591)
IPGateway (p. 591)
IPGatewayCSIO() (p. 592)
IPInfo (p. 592)
IPMaskCSIO() (p. 592)
IPMaskEth (p. 592)
IPTrace (p. 592)
IPTraceCode (p. 592)
IPTraceComport (p. 592)
IsRouter (p. 593)

M
MaxBuffDepth (p. 595)
MaxPacketSize (p. 595)
MaxProcTime (p. 595)
MaxSlowProcTime() (p. 595)
MaxSystemProcTime (p. 595)
MeasureOps (p. 595)
MeasureTime (p. 595)
MemoryFree (p. 596)
MemorySize (p. 596)
Messages (p. 596)

N
Neighbors() (p. 596)

O
OSDate (p. 597)
OSSignature (p. 597)
OSVersion (p. 597)

P
PakBusAddress (p. 597)
PakBusEncryptionKey (p. 597)
PakBusPort (p. 597)
PakBusRoutes (p. 598)
PakBusTCPClients (p. 598)
PakBusTCPEnabled (p. 598)
PakBusTCPPassword (p. 598)
PanelTemp (p. 598)
PingEnabled (p. 598)
pppIPAddr (p. 599)
pppIPMask (p. 599)
pppPassword (p. 600)
pppUsername (p. 600)
ProcessTime (p. 600)
ProgErrors (p. 600)
ProgName (p. 600)
ProgSignature (p. 600)

R
RecNum (p. 601)
RevBoard (p. 601)
RouteFilters (p. 601)
RS232Handshaking (p. 601)
RS232Power (p. 601)
RS232Timeout (p. 601)
RunSignature (p. 602)

S
SecsPerRecord() (p. 602)
Security(1) (p. 602)
Security(2) (p. 602)
Security(3) (p. 602)
SerialNumber (p. 602)
ServicesEnabled() (p. 603)
SkippedRecord() (p. 603)
SkippedScan (p. 603)
SkippedSlowScan() (p. 603)

T
TCPClientConnections (p. 604)
TCPPort (p. 604)
TelnetEnabled (p. 604)
TimeStamp (p. 604)
TLS Certificate (p. 604)
TLS Enabled (p. 605)
TLS Private Key (p. 605)

U
UDPBroadcastFilter (p. 605)
USRDriveFree (p. 605)
USRDriveSize (p. 605)
UTCOffset (p. 606)

V
VarOutOfBound (p. 606)
Verify() (p. 606)

W
WatchdogErrors (p. 607)

Table 138. Status/Settings/DTI: Alphabetical Listing of Keywords

D	**L**	*PortConfig()* (p. 598)	*SkippedSystemScan* (p. 603)
DataFillDays() (p. 589)	*LastSlowScan()* (p. 594)	*PortStatus()* (p. 599)	*SlowProcTime()* (p. 603)
DataRecordSize() (p. 589)	*LastSystemScan* (p. 594)		*StartTime* (p. 603)
DataTableName() (p. 589)	*LithiumBattery* (p. 594)	*pppDial* (p. 599)	*StartUpCode* (p. 603)
	Low12VCount (p. 594)	*pppDialResponse* (p. 599)	*StationName* (p. 604)
	Low5VCount (p. 594)	*pppInterface* (p. 599)	*SW12Volts()* (p. 604)
DNS() (p. 589)			*SystemProcTime* (p. 604)

Table 139. Status/Settings/DTI: Status Table Entries on CR1000KD Keyboard Display

RecNum (p. 601)	*VarOutOfBound* (p. 606)	*PortConfig()* (p. 598)
TimeStamp (p. 604)	*SkippedScan* (p. 603)	*SW12Volts()* (p. 604)
OSVersion (p. 597)	*SkippedSystemScan* (p. 603)	*PakBusRoutes* (p. 598)
OSDate (p. 597)	*SkippedSlowScan()* (p. 603)	*Messages* (p. 596)
OSSignature (p. 597)	*ErrorCalib* (p. 589)	
	MemorySize (p. 596)	
SerialNumber (p. 602)	*MemoryFree* (p. 596)	
RevBoard (p. 601)		
StationName (p. 604)	*CommsMemFree(1)* (p. 588)	
ProgName (p. 600)	*CommsMemFree(2)* (p. 588)	
	CommsMemFree(3) (p. 588)	
StartTime (p. 603)	*FullMemReset* (p. 590)	*CalGain()* (p. 587)
RunSignature (p. 602)		
ProgSignature (p. 600)	*MeasureOps* (p. 595)	*CalSeOffset()* (p. 587)
WatchdogErrors (p. 607)	*MeasureTime* (p. 595)	*CalDiffOffset()* (p. 586)
PanelTemp (p. 598)	*ProcessTime* (p. 600)	
Battery (p. 585)	*MaxProcTime* (p. 595)	
LithiumBattery (p. 594)	*BuffDepth* (p. 586)	
	MaxBuffDepth (p. 595)	
	LastSystemScan (p. 594)	
	LastSlowScan() (p. 594)	
Low12VCount (p. 594)	*SystemProcTime* (p. 604)	
Low5VCount (p. 594)	*SlowProcTime()* (p. 603)	
CompileResults (p. 588)	*MaxSystemProcTime* (p. 595)	
StartUpCode (p. 603)	*MaxSlowProcTime()* (p. 595)	
ProgErrors (p. 600)	*PortStatus()* (p. 599)	

Table 140. Status/Settings/DTI: Settings (General) on CR1000KD Keyboard Display		
StationName (p. 604)	*FilesManager* (p. 590)	*RS232Handshaking* (p. 601)
Security(1) (p. 602)	*RouteFilters* (p. 601)	*RS232Timeout* (p. 601)
Security(2) (p. 602)	*CentralRouters()* (p. 587)	
Security(3) (p. 602)	*IncludeFile* (p. 591)	
PakBusAddress (p. 597)	*UTCOffset* (p. 606)	
IsRouter (p. 593)	*CPUDriveFree* (p. 588)	
CommsMemAlloc (p. 587)	*USRDriveFree* (p. 605)	
MaxPacketSize (p. 595)		
PakBusEncryptionKey (p. 597)	*USRDriveSize* (p. 605)	
PakBusTCPPassword (p. 598)	*RS232Power* (p. 601)	

Table 141. Status/Settings/DTI: Settings (comport) on CR1000KD Keyboard Display	
Baudrate() (p. 585)	*Neighbors()* (p. 596)
Beacon() (p. 586)	*Verify()* (p. 606)

Table 142. Status/Settings/DTI: Settings (TCP/IP) on CR1000KD Keyboard Display	
IPInfo (p. 592)	*pppIPAddr* (p. 599)
EthernetEnable (p. 589)	*pppIPMask* (p. 599)
CSIO1netEnable	*pppUsername* (p. 600)
	pppPassword (p. 600)
	pppDial (p. 599)
CSIO2netEnable	*pppDialResponse* (p. 599)
	IPTraceComport (p. 592)
EthernetPower (p. 590)	*IPTraceCode* (p. 592)
IPAddressEth (p. 591)	*DNS()* (p. 589)
IPMaskEth (p. 592)	*PakBusTCPClients* (p. 598)
IPGateway (p. 591)	*UDPBroadcastFilter* (p. 605)
	HTTPEnabled (p. 591)
	FTPEnabled (p. 590)
	TelnetEnabled (p. 604)
IPAddressCSIO() (p. 591)	*PingEnabled* (p. 598)
IPMaskCSIO() (p. 592)	*PakBusTCPEnabled* (p. 598)
IPGatewayCSIO() (p. 592)	
PakBusPort (p. 597)	
FTPPort (p. 590)	
HTTPPort (p. 591)	
FTPUserName (p. 590)	
FTPPassword (p. 590)	
pppInterface (p. 599)	

Table 143. Status/Settings/DTI: Settings Only in Settings Editor	
TLS Certificate (p. 604)	*TLS Private Key* (p. 605)

Table 144. Status/Settings/DTI: Data Table Information Table (DTI) Keywords		
DataFillDays() (p. 589)	*DataTableName()* (p. 589)	*SkippedRecord()* (p. 603)
DataRecordSize() (p. 589)	*SecsPerRecord()* (p. 602)	

Table 145. Status/Settings/DTI: Auto-Calibration		
CalDiffOffset() (p. 586)		*SkippedSystemScan* (p. 603)
CalGain() (p. 587)	*ErrorCalib* (p. 589)	*SystemProcTime* (p. 604)
	LastSystemScan (p. 594)	
CalSeOffset() (p. 587)	*MaxSystemProcTime* (p. 595)	

Table 146. Status/Settings/DTI: Communications, General		
Baudrate() (p. 585)	*CommsMemFree(2)* (p. 588)	*RS232Handshaking* (p. 601)
CommsMemAlloc (p. 587)	*CommsMemFree(3)* (p. 588)	*RS232Power* (p. 601)
		RS232Timeout (p. 601)
CommsMemFree(1) (p. 588)		

Table 147. Status/Settings/DTI: Communications, PakBus		
Beacon() (p. 586)	*PakBusAddress* (p. 597)	*PakBusTCPEnabled* (p. 598)
CentralRouters() (p. 587)	*PakBusEncryptionKey* (p. 597)	*PakBusTCPPassword* (p. 598)
IsRouter (p. 593)	*PakBusPort* (p. 597)	*RouteFilters* (p. 601)
MaxPacketSize (p. 595)	*PakBusRoutes* (p. 598)	*Verify()* (p. 606)
Neighbors() (p. 596)	*PakBusTCPClients* (p. 598)	

Table 148. Status/Settings/DTI: Communications, TCP_IP I		
CSIO1netEnable	*IPGateway* (p. 591)	
CSIO2netEnable	*IPGatewayCSIO()* (p. 592)	*IPTrace* (p. 592)
DNS() (p. 589)		*IPTraceCode* (p. 592)
EthernetEnable (p. 589)	*IPInfo* (p. 592)	*IPTraceComport* (p. 592)
EthernetPower (p. 590)	*IPMaskCSIO()* (p. 592)	*PingEnabled* (p. 598)
IPAddressCSIO() (p. 591)	*IPMaskEth* (p. 592)	*TelnetEnabled* (p. 604)
IPAddressEth (p. 591)		

Table 149. Status/Settings/DTI: Communications, TCP_IP II		
FTPEnabled (p. 590)		*TLS Private Key* (p. 605)
FTPPassword (p. 590)		
FTPPort (p. 590)	*TLS Certificate* (p. 604)	
FTPUserName (p. 590)		
HTTPEnabled (p. 591)		*UDPBroadcastFilter* (p. 605)
HTTPPort (p. 591)		

Table 150. Status/Settings/DTI: Communications, TCP_IP III		
pppDial (p. 599)	*pppIPAddr* (p. 599)	*pppUsername* (p. 600)
pppDialResponse (p. 599)	*pppIPMask* (p. 599)	
pppInterface (p. 599)	*pppPassword* (p. 600)	

Table 151. Status/Settings/DTI: CRBasic Program I		
BuffDepth (p. 586)	*MaxBuffDepth* (p. 595)	*MeasureTime* (p. 595)
CompileResults (p. 588)	*MaxProcTime* (p. 595)	*Messages* (p. 596)
IncludeFile (p. 591)	*MaxSlowProcTime()* (p. 595)	
LastSlowScan() (p. 594)	*MeasureOps* (p. 595)	

Table 152. Status/Settings/DTI: CRBasic Program II		
ProcessTime (p. 600)	*SkippedScan* (p. 603)	*StartTime* (p. 603)
ProgErrors (p. 600)	*SkippedSlowScan()* (p. 603)	*StartUpCode* (p. 603)
ProgName (p. 600)	*SlowProcTime()* (p. 603)	*VarOutOfBound* (p. 606)

Table 153. Status/Settings/DTI: Data		
DataFillDays() (p. 589)	*DataTableName()* (p. 589)	*SkippedRecord()* (p. 603)
DataRecordSize() (p. 589)	*SecsPerRecord()* (p. 602)	

Table 154. Status/Settings/DTI: Memory		
	FilesManager (p. 590)	*USRDriveFree* (p. 605)
	FullMemReset (p. 590)	*USRDriveSize* (p. 605)
CPUDriveFree (p. 588)	*MemoryFree* (p. 596)	
	MemorySize (p. 596)	

Table 155. Status/Settings/DTI: Miscellaneous		
	PortStatus() (p. 599)	*TimeStamp* (p. 604)
	RecNum (p. 601)	*UTCOffset* (p. 606)
PanelTemp (p. 598)	*StationName* (p. 604)	*WatchdogErrors* (p. 607)
PortConfig() (p. 598)	*SW12Volts()* (p. 604)	

Table 156. Status/Settings/DTI: Obsolete		
IPTrace (p. 592)	*TCPClientConnections* (p. 604)	*TLS Enabled* (p. 605)
PakBusNodes (p. 597)	*TCPPort* (p. 604)	
ServicesEnabled() (p. 603)		

Table 157. Status/Settings/DTI: OS and Hardware Versioning		
OSDate (p. 597)	*OSVersion* (p. 597)	*SerialNumber* (p. 602)
OSSignature (p. 597)	*RevBoard* (p. 601)	

Table 158. Status/Settings/DTI: Power Monitors		
Battery (p. 585)		*Low5VCount* (p. 594)
	LithiumBattery (p. 594)	
	Low12VCount (p. 594)	

Table 159. Status/Settings/DTI: Security	
PakBusTCPPassword (p. 598)	*Security(3)* (p. 602)
Security(1) (p. 602)	*TLS Certificate* (p. 604)
Security(2) (p. 602)	*TLS Private Key* (p. 605)

Table 160. Status/Settings/DTI: Signatures		
OSSignature (p. 597)	*ProgSignature* (p. 600)	*RunSignature* (p. 602)

B.2 Status/Settings/DTI Descriptions (Alphabetical)

Table 161. Status/Settings/DTI: B

Keyword	*Alias, Access, Description*	*Read/Write, Data Type, Units*	*Default Value*	*Normal Range*
Battery	Station Status: **Battery Voltage** Keyboard: **Status Table** ≈ line 1 CRBasic: **variable = status.keyword** Voltage of the battery connected to the **POWER IN 12V** and **G** terminals. Measurement is made during auto (background) calibration. This is the same measurement made by the CRBasic **Battery()** instruction.	read only IEEE4 Volts	voltage of primary power supply	9.6 to 16
Baudrate()	Settings Editor: **Baud Rate** Alias: **Communication Ports Baud Rates** Keyboard: **Settings (comports)** ≈ line 16 CRBasic: **variable = status.keyword**; **SetSetting()**, **SerialOut()** Array of integers setting baud rates for com ports **RS-232**, **CS I/O**, and **C** terminals. **Table 162. Baudrate() Array, Keywords, and Default Settings** *Array Element Number* / *Port Keyword* / *Default Baud Rate* **(1) ComRS232 -115200** **(2) ComME -115200** **(3) ComSDC7 115200** **(4) ComSDC8 115200** **(5) ComSDC10 115200** **(6) ComSDC11 115200** **(7) Com1 0** **(8) Com2 0** **ComRS232** and **ComME** (CS I/O) support auto baud. Auto baud is selected by a value of **0** or a valid entry preceded by a dash (e.g., **-115200**) with the beginning rate the entered value. Auto baud samples the incoming baud rate and sets the port to that rate. If baud rate is changed on any port created with **C** terminals, the CRBasic program will recompile if the change is to **0** (disabled) or from **0** to baud rate (enabled). See table Baudrate(), Beacon(), and Verify() Details	read/write LONG array	See table at left.	**0** (auto baud or disabled) **1200** **2400** **4800** **9600** **19200** **38400** **57600** **76800** **115200**

Beacon()	Settings Editor: **Beacon Interval** Alias: **Communication Ports Beacon Intervals** Keyboard: **Settings (comports)** CRBasic: **variable = settings.keyword**; **SetSettings()** Governs the rate at which the CR800 broadcasts PakBus messages on the associated port to discover new neighboring nodes. It also governs the default verification interval if the value of **Verify()** *(p. 606)* for the associated port is **0**. **Table 163. Beacon() Array, Keywords, and Default Settings** ***Array Element Number*** / ***Port Keyword*** **(1) ComRS232** **(2) ComME** **(3) ComSDC7** **(4) ComSDC8** **(5) ComSDC10** **(6) ComSDC11** **(7) Com1** **(8) Com2** See table Baudrate(), Beacon(), and Verify() Details	read/write LONG array seconds	0	0 to 2147483648
BuffDepth	Keyboard: **Status Table** ≈ line 42 CRBasic: **variable = status.keyword** Shows the current *Pipeline Mode* *(p. 150)* processing buffer depth, which indicates how far the processing task is currently behind the measurement task.	read only LONG	0	

Table 164. Status/Settings/DTI: C

Keyword	***Alias, Access, Description***	***Read/Write, Data Type, Units***	***Default Value***	***Normal Range***
CalDiffOffset()[2]	Keyboard: **Status Table** ≈ line 63 CRBasic: **variable = status.keyword** Array of 18 integers reporting differential offsets for each integration / range combination. Updated by background calibration when required.	read only INTLONG mV		near 0

CalGain()[2]	Keyboard: **Status Table** ≈ line 61 CRBasic: **variable = status.keyword** Array of 18 floating-point values reporting calibration gain for each integration / range combination. Updated by background calibration.	read-only IEEE4 mV		
CalSeOffSet()[2]	Keyboard: **Status Table** ≈ line 62 CRBasic: **variable = status.keyword** Array of 18 integers reporting single-ended offsets for each integration / range combination. Updated by the auto (background) calibration when required.	read only LONG mV		near 0
CentralRouters()	Settings Editor: **Central Routers** Keyboard: **Settings (General)** ≈ line 13 CRBasic: **variable = settings.keyword**; **SetSettings()** Array of eight PakBus addresses for routers that can act as central routers. By specifying a non-empty list for this setting, the CR800 is configured as a branch router meaning that it will not be required to keep track of neighbors of any routers except those in its own branch. So configured, the CR800 ignores any neighbor lists received from addresses in the central routers setting and forwards messages that it receives to the nearest default router if it does not have the destination address for those messages in its routing table. Each entry must be formatted with a comma separating individual values.	read/write LONG	0	
CommActive()[3]	CRBasic: **variable = status.keyword** "Hidden" array indicating if communications are currently active on the corresponding ports. Order of array elements is ComRS232, ComME, ComSDC7, ComSDC8, ComSDC10, ComSDC11, Com1, Com2,	read only BOOLEAN	**False** (except for the active communicati on port)	**True** or **False**
CommConfig()	CRBasic: **variable = status.keyword**; **SerialOpen()** "Hidden" array indicating configuration of corresponding ports. When **SerialOpen()** is used, values indicate format parameters for that instruction. PakBus communications can occur concurrently on the same port if the port was previously opened (in the case of the CP UARTS) for PakBus, or if the port is always open (**CS I/O** and **RS-232**) for PakBus, the code is **4**. Order of array elements is RS-232, CS I/O ME, COM310, CS I/O SDC7, CS I/O SDC8, CS I/O SDC10, CS I/O SDC11, Com1, Com2,	read/write LONG	**RS-232** is always hardware enabled **RS-232** through SDC8 = **4** (enabled) **COM1** or **COM2** = **0** (disabled)	**0** = Program disabled **4** = Program enabled
CommsMemAlloc	Settings Editor: **Communication Allocation** AKA: **PakBusNodes**, **PakBus Nodes Allocation**, **PakBus Network Node Number** Keyboard: **Settings (General)** ≈ line 7 CRBasic: **variable = settings.keyword**; **SetSettings()** Specifies the amount of memory that the CR800 allocates for maintaining PakBus routing information. Represents roughly the maximum number of PakBus nodes that the CR800 is able to track in its routing tables (see section *CommsMemFree(2)* *(p. 468)*).	read/write LONG	At start up, with no TCP/IP comms: **1530** Signifies IP packets: • 15 big • 30 little • nothing in receive queue	

CommsMemFree(1)	Keyboard: **Status Table** ≈ line 33 CRBasic: **variable = status.keyword** Array indicating numbers of buffers used in communications except with an external keyboard display. Two digits per each buffer-size category. Least significant digit specifies the number of the smallest buffers. Most significant digit specifies the number of the largest buffers. When TLS is not active, there are four categories, "tiny", "little", "medium", and "large". When TLS is active, there is an additional fifth category, "huge", and there are more buffers allocated for each category. See section *CommsMemFree(1)* **(p. 467).**	read only LONG	?	**TLS Not Active:** tiny — 05 little — 15 medium — 25 large — 15 huge — 0 **TLS Active:** tiny — 160 little — 99 medium — 99 large — 30 huge — 02
CommsMemFree(2)	Keyboard: **Status Table** ≈ line 34 CRBasic: **variable = status.keyword** Array indicating numbers of buffers remaining for PakBus routing and neighbor lists. Each route or neighbor requires one buffer. See section *CommsMemFree(2)* **(p. 468).**	read only LONG	?	?
CommsMemFree(3)	Keyboard: **Status Table** ≈ line 35 CRBasic: **variable = status.keyword** Array indicating three two-digit fields, from right (least significant) to left (most significant): "little" IP packets available, "big" IP packets, and received IP packets in a receive queue that have not yet been processed. See the section *CommsMemFree(3)* **(p. 469).**	read only LONG		At start up, with no TCP/IP comms: 1530 — 30 little, 15 big IP packets available with nothing in the receive queue.
CompileResults	Station Status: **Results for Last Program Compiled** Keyboard: **Status Table** ≈ line 23 CRBasic: **variable = status.keyword** Contains error messages generated at compilation or during runtime.	read-only STRING		0
CPUDriveFree	Keyboard: **Settings (General)** ≈ line 16 CRBasic: **variable = settings.keyword**; **SetSettings()** Bytes remaining on the CPU: drive. This drive resides in the serial FLASH and is always present. CRBasic programs are normally stored here.	read-only integer		

[2] Order and definitions of auto-calibration array elements:

(1) 5000 mV range 250 ms integration
(2) 2500 mV range 250 ms integration
(3) 250 mV range 250 ms integration
(4) 25 mV range 250 ms integration
(5) 7.5 mV range 250 ms integration
(6) 2.5 mV range 250 ms integration
(7) 5000 mV range 60 Hz integration
(8) 2500 mV range 60 Hz integration
(9) 250 mV range 60 Hz integration
(10) 25 mV range 60 Hz integration
(11) 7.5 mV range 60 Hz integration
(12) 2.5 mV range 60 Hz integration
(13) 5000 mV range 50 Hz integration
(14) 2500 mV range 50 Hz integration
(15) 250 mV range 50 Hz integration
(16) 25 mV range 50 Hz integration
(17) 7.5 mV range 50 Hz integration
(18) 2.5 mV range 50 Hz integration

[3] In general, **CommActive** is set to **TRUE** when receiving incoming characters, independent of the protocol. It is set to **FALSE** after a 40 second timeout during which no incoming characters are processed, or when the protocol is PakBus and the serial packet protocol on the COM port specifies off line. Note, therefore, that for protocols other than PakBus that are serviced by the **SerialIO()** instruction (ModBus, DNP3, generic protocols), **CommActive** will remain **TRUE** as long as characters are received at a rate faster than every 40 seconds. In addition, PPP will activate its COM port with a 31 minute timeout. When PPP closes, it will cancel the timeout and set **CommActive** as **FALSE**. Further, if there is a dialing process going on, **CommActive** is set to **TRUE**. One other event that causes **ComME** to be active is the GOES instruction. In conclusion, the name **CommActive** can be misleading. For example, if there are no incoming characters to activate the 40-second timeout during which time **CommActive** is set to **TRUE** and only outputs data, then **CommActive** is not set to **TRUE**. For protocols other than PakBus,the active **TRUE** lingers for 40 seconds after the last incoming characters are processed. For PPP, the COM port is always **TRUE** so long as PPP is open.

Table 165. Status/Settings/DTI: D

Keyword	*Alias, Access, Description*	*Read/Write, Data Type, Units*	*Default Value*	*Normal Range*
DataFillDays()	Keyboard: **DataTableInfo** ≈ line 5 CRBasic: **variable = status.keyword** Reports the time required to fill a data table. Each table has its own entry.	read only LONG array days		
DataRecordSize()	Keyboard: **DataTableInfo**: ≈3 CRBasic: **variable = status.keyword** Reports the number of records in a data table.	read only LONG array		
DataTableName()	Keyboard: **DataTableInfo** ≈ line 1 CRBasic: **variable = status.keyword** Reports the names of data tables. Array elements are in the order the data tables are declared in the CRBasic program.	read only STRING array		
DNS()	Settings Editor name: **Name Servers** Keyboard: **Settings (TCP/IP)** ≈ line 32 CRBasic: **variable = settings.keyword**; **SetSettings()** Specifies the addresses of up to two domain name servers that the CR800 can use to resolve domain names to IP addresses. Note that if DHCP is used to resolve IP information, the addresses obtained via DHCP are appended to this list.	read/write STRING	0.0.0.0	0–255.0–255.0–255.0-255

Table 166. Status/Settings/DTI: E

Keyword	*Alias, Access, Description*	*Read/Write, Data Type, Units*	*Default Value*	*Normal Range*
ErrorCalib	Keyboard: **Status Table** ≈ line 30 CRBasic: **variable = status.keyword** Number of erroneous calibration values measured. Erroneous values are discarded. Auto-calibration runs in a hidden slow-sequence scan. See section CR800 Auto Calibration — Overview *(p. 91).*	read-only LONG Count	0	0
EthernetEnable	Keyboard: **Settings (TCP/IP)** ≈ line 2 Settings Editor: **Ethernet Interface Enabled**	read/write BOOLEAN	**True**	**True** or **False**

	CRBasic: **variable = settings.keyword**; **SetSettings()**			
EthernetPower	Keyboard: **Settings (TCP/IP)** ≈ line 6 Settings Editor: **Ethernet Power** CRBasic: **variable = settings.keyword**; **SetSettings()**	read/write UINT2 minute		0 to 4, 4 = always off

Table 167. Status/Settings/DTI: F

Keyword	*Alias, Access, Description*	*Read/Write, Data Type, Units*	*Default Value*	*Normal Range*
FilesManager	Settings Editor: **Files Manager** Keyboard: **Settings (General)** ≈ line 11 CRBasic: **variable = settings.keyword**; **SetSettings()** Specifies the numbers of files of a designated type that are saved when received from a specified node. See section *Files Manager* (p. 363).	read/write STRING	**(0, , 0)**	0 to 351 characters
FTPEnabled	Keyboard: **Settings (TCP/IP)** ≈ line 36 Settings Editor: **FTP Enabled** CRBasic: **variable = settings.keyword**; **SetSettings()** Set to **1** if the FTP service should be enabled. This service is disabled by default. Aliased to now obsolete **ServicesEnabled()**	read/write BOOLEAN	**False**	**True** of **False**
FTPPassword	Settings Editor: **FTP Password** Keyboard: **Settings (TCP/IP)** ≈ line 22 CRBasic: **variable = settings.keyword**; **SetSettings()** Specifies the password that is used to log in to the FTP server.	read/write STRING		0 to 63 characters
FTPPort	Settings Editor: **FTP Service Port** Keyboard: **Settings (TCP/IP)** ≈ line 17 CRBasic: **variable = settings.keyword**; **SetSettings()** Configures the TCP port on which the FTP service is offered. Generally, the default value is sufficient unless a different value needs to be specified in order to accommodate port mapping rules in a network address translation firewall.	read/write UINT2	**21**	**0** to **65535**
FTPUserName	Keyboard: **Settings (TCP/IP)** ≈ line 21 Settings Editor: **FTP User Name** CRBasic: **variable = settings.keyword**; **SetSettings()** Specifies the user name that is used to log in to the FTP server. An empty string or "anonymous" (the default) inactivates the FTP server.	read/write STRING	"anonymous"	0 to 63 characters
FullMemReset	Keyboard: **Status Table** ≈ line 36 CRBasic: **variable = settings.keyword**; **SetSettings()** Enter **98765** to start a full-memory reset. See section *Full Memory Reset* (p. 360).	read/write LONG	**0**	to reset, enter **98765**

Table 168. Status/Settings/DTI: H

Keyword	Alias, Access, Description	Read/Write, Data Type, Units	Default Value	Normal Range
HTTPEnabled	Settings Editor: **HTTP Enabled** Aliased from: **ServicesEnabled()** Keyboard: **Settings (TCP/IP)** ≈ line 35 CRBasic: **variable = settings.keyword**; **SetSettings()** Replaces old **ServicesEnabled()**. Enables (**True**) or disables (**False**) the HTTP service.	read/write BOOLEAN	**True**	**True** of **False**
HTTPPort	Settings Editor: **HTTP Service Port** Keyboard: **Settings (TCP/IP)** ≈ line 18 CRBasic: **variable = settings.keyword**; **SetSettings()** Configures the TCP port on which the HTTP (web server) service is offered. Generally, the default value is sufficient unless a different value needs to be specified in order to accommodate port-mapping rules in a network-address translation firewall.	read/write LONG	**80**	**0** to **65535**

Table 169. Status/Settings/DTI: I

Keyword	Alias, Access, Description	Read/Write, Data Type, Units	Default Value	Normal Range
IncludeFile	Keyboard: **Settings (General)** ≈ line 14 AKA: **Include File Name** Settings Editor: **Include File Name** CRBasic: **variable = settings.keyword**; **SetSettings()** Name of a file to be included at the end of the current CRBasic program, or that can be run as the default program. See section *'Include File'* (p. 145). Specify {drive}:{filename}, where drive: = CPU:, USR:, USB: . Program file extensions must be valid for the CRBasic program (.dld, cr8).	read/write STRING	no entry	0 to 63 characters
IPAddressCSIO()	Settings Editor: **CS I/O IP Address** Keyboard: **Settings (TCP/IP)** ≈ line 13 CRBasic: **variable = settings.keyword**; **SetSettings()**	read/write STRING array	0.0.0.0	0–255.0–255.0–255.0–255
IPAddressEth	Settings Editor: **Ethernet IP Address** Keyboard: **Settings (TCP/IP)** ≈ line 7 CRBasic: **variable = settings.keyword**; **SetSettings()** Specifies the IP address for the Ethernet interface. If zero, the address, net mask, and gateway are configured automatically using DHCP. Made available only if an Ethernet link is connected. A change will cause the CRBasic program to recompile.	read/write 4B STRING	0.0.0.0	0–255.0–255.0–255.0–255
IPGateway	Settings Editor: **Ethernet Default Gateway** AKA: **Default Gateway**	read/write	0.0.0.0	0–255.0–255.0–255.0–

	Keyboard: **Settings (TCP/IP)** ≈ line 9 CRBasic: **variable = settings.keyword**; **SetSettings()** Specifies the address of the IP router to which the CR800 will forward all non-local IP packets for which it has no route. A change will cause the CRBasic program to recompile.	4B STRING		255
IPGatewayCSIO()	Settings Editor: **CS I/O Default Gateway** Keyboard: **Settings (TCP/IP)** ≈ line 15 CRBasic: **variable = settings.keyword**; **SetSettings()**	read/write STRING array	0.0.0.0	0–255.0–255.0–255.0–255
IPInfo[1]	Settings Editor: **TCP/IP Info** Keyboard: **Settings (TCP/IP)** ≈ line 1 CRBasic: see footnote 1 Indicates current parameters for IP connection.	read only STRING		n/a
IPMaskCSIO()	Settings Editor: **CS I/O Subnet Mask** Keyboard: **Settings (TCP/IP)** ≈ line 14 CRBasic: **variable = settings.keyword**; **SetSettings()**	read/write STRING array	255.255.255.0	0–255.0–255.0–255.0–255
IPMaskEth	Settings Editor: **Ethernet Subnet Mask** Keyboard: **Settings (TCP/IP)** ≈ line 8 CRBasic: **variable = settings.keyword**; **SetSettings()** Specifies the subnet mask for the Ethernet interface. This setting is made available when an Ethernet link is connected. A change will cause the CRBasic program to recompile.	read/write STRING	255.255.255.0	0–255.0–255.0–255.0–255
IPTrace	Obsolete. Aliased to **IPTraceComport**			
IPTraceCode	Settings Editor: **IP Trace Code** Keyboard: **Settings (TCP/IP)** ≈ line 31 CRBasic: **variable = settings.keyword**; **SetSettings()** This setting controls what type of information is sent on the port specified by **IPTracePort** and via Telnet. Useful values are: 0 Trace is inactive 1 Startup and watchdog only 2 Verbose PPP 4 Print general informational messages 16 Display net-interface error messages 256 Transport protocol (UDP/TCP/RVD) trace 8192 FTP trace 65535 Trace everything	read/write UINT2	0	0 to 65535, see description at left.
IPTraceComport	Settings Editor: **IP Trace COM Port** Aliased from: **IPTrace** Keyboard: **Settings (TCP/IP)** ≈ line 30 CRBasic: **variable = settings.keyword**; **SetSettings()** Specifies the port (if any) on which TCP/IP trace information is sent. Information type is controlled by **IPTraceCode**.	read/write LONG	0 (inactive)	0 to 65535

IsRouter	Settings Editor: **Is Router** Keyboard: **Settings (General)** ≈ line 6 CRBasic: **variable = settings.keyword**; **SetSettings()** Controls configuration of CR800 as a router or leaf node.	read/write BOOLEAN	**False**	**True** = router **False**=leaf node

[1] **IPInfo** was moved from **Status** to **Settings** in OS1 OS28 to optimize use of telecommunication bandwidth.

IPInfo requires about 1.5 KB when all IP interfaces are active. This 1.5 KB is transfered each time it is requested regardless of how many IP interfaces are actually used. Settings are retrieved and displayed in a much more controlled one-shot-poll fashion so bandwidth is preserved. Follow are methods for viewing IPInfo:

a) **Settings Editor** in *DevConfig*, *LoggerNet* | *Connect*, *LoggerNet* | *PakBusGraph*, and *LoggerLink* software.

b) CR1000KD Keyboard Display Settings (TCP/IP)

c) CRBasic programming as shown in the following code snips

Example 1

```
'IPInfo for one IP interface
Public IPStatus As String * 400
BeginProg
  Scan(1,Sec,0,0)
    IPStatus = Settings.IPInfo
  NextScan
EndProg
```

Example 2

```
'Get just the IP address
Public EthIPAddr As String * 16
BeginProg
  Scan(1,Sec,0,0)
    EthIPAddr = IPInfo(0,0)
  NextScan
EndProg
```

Example 3

```
'PPP status
Public PPPMsg As String * 100

SetSetting("BaudRate(Com1)",9600)
SetSetting("IPTraceCode",2)
SetSetting("pppInterface",Com1)
SetSetting("pppDial","PPP")

BeginProg
  Scan(1,Sec,0,0)
  NextScan

  SlowSequence
  Do
    Delay(1,2,Sec)
    IPTrace(PPPMsg)
  Loop
  EndSequence
EndProg
```

Table 170. Status/Settings/DTI: L

Keyword	Alias, Access, Description	Read/Write, Data Type, Units	Default Value	Normal Range
LastSlowScan()	Keyboard: **Status Table** ≈ line 45 CRBasic: **variable = status.keyword** Reports the las time a **SlowSequence** scan in the CRBasic program was executed. See *MaxSlowProcTime* ***(p. 595),*** *SkippedSlowScan* ***(p. 603),*** *SlowProcTime* ***(p. 603).***	read only NSEC array date/time	n/a	recent past
LastSystemScan	Keyboard: **Status Table** ≈ line 44 CRBasic: **variable = status.keyword** Reports the time of the of the last auto (background) calibration, which runs in a hidden slow-sequence type scan. See MaxSystemProcTime ***(p. 595),*** SkippedSystemScan ***(p. 603),*** SystemProcTime ***(p. 604),*** and section CR800 Auto Calibration — Overview ***(p. 91).***	read-only NSEC date/time	n/a	within the past few minutes
LithiumBattery	Station Status: **Lithium Battery** Keyboard: **Status Table** ≈ line 17 CRBasic: **variable = status.keyword** Voltage of the internal lithium battery. Updated in auto (background) calibration. Replace lithium battery if <2.7 Vdc. See Replacing the Internal Battery ***(p. 449).***	read-only FLOAT volts	n/a	2.7 to 3.6
Low12VCount	Station Status: **Number of times voltage has dropped below 12V** Keyboard: **Status Table** ≈ line 21 CRBasic: **variable = status.keyword** Increments by 1 each time the primary CR800 supply voltage drops below ≈9.0. Updated with each **Status** table update. The following applies to the CR800 and CR1000 dataloggers. A variation may apply to the C6 and CR3000: The 12 Vdc-low comparator triggers at about 9.0 Vdc. The minimum-specified input voltage of 9.6 Vdc will not cause a 12 Vdc low condition, but a 12 Vdc low condition will stop program execution before measurements are compromised.	reset only LONG count	0	0 to 99 0 = reset
Low5VCount	Station Status: **Number of times voltage has dropped below 5V** Keyboard: **Status Table** ≈ line 22 CRBasic: **variable = status.keyword** Number of occurrences of the 5 Vdc supply dropping below a functional threshold.	reset only LONG count	0	0 to 99 0 = reset

Table 171. Status/Settings/DTI: M

Keyword	Alias, Access, Description	Read/Write, Data Type, Units	Default Value	Normal Range
MaxBuffDepth	Keyboard: **Status Table** ≈ line 43 CRBasic: **variable = status.keyword** Maximum number of buffers the CR800 will use to process lagged measurements.	read/write LONG no units	0	?
MaxPacketSize	Settings Editor: **Max Packet Size** Keyboard: **Settings (General)** ≈ line 8 CRBasic: **variable = settings.keyword**; **SetSettings()** Maximum number of bytes per data collection packet.	read/write LONG bytes	1000	?
MaxProcTime	Keyboard: **Status Table** ≈ line 41 CRBasic: **variable = status.keyword** Maximum time required to run through processing for the current scan. Value is reset when the scan exits. Calculated on-the-fly. See *MeasureTime* ***(p. 595)***, *ProcessTime* ***(p. 600)***, *SkippedScan* ***(p. 603)***, *MaxProcTime* ***(p. 595)***.	read/write LONG µs	n/a	**0** = reset
MaxSlowProcTime()	Keyboard: **Status Table** ≈ line 49 CRBasic: **variable = status.keyword** Maximum time required to process a **SlowSequence** scan in the CRBasic program. **0** until a scan runs. See *LastSlowScan* ***(p. 594)***, *SkippedSlowScan* ***(p. 603)***, *SlowProcTime* ***(p. 603)***.	read/write LONG array µs	**0** until scan	0 = rest
MaxSystemProcTime	Keyboard: **Status Table** ≈ line 48 CRBasic: **variable = status.keyword** Maximum time required to process the auto (background) calibration, which runs in a hidden slow-sequence type scan. Displays **0** until an auto-calibration runs. See LastSystemScan ***(p. 594)***, SkippedSystemScan ***(p. 603)***, SystemProcTime ***(p. 604)***, and section CR800 Auto Calibration — Overview ***(p. 91)***.	read-only LONG µs	**0** until scan	0 = reset
MeasureOps	Keyboard: **Status Table** ≈ line 38 CRBasic: **variable = status.keyword** Reports the number of task-sequencer opcodes required to do all measurements. Calculated at compile time. Includes opcodes for calibration (compile time), auto (background) calibration (system), and slow sequences. Assumes all measurement instructions run each scan.	read only LONG no units	n/a	n/a
MeasureTime	Keyboard: **Status Table** ≈ line 39 CRBasic: **variable = status.keyword** Reports the time needed to make measurements in the current scan. Calculated at compile time. Includes integration and settling time. In pipeline mode, processing occurs concurrent with this time so the sum of **MeasureTime** and **ProcessTime** is not equal to the required scan time. Assumes all measurement instructions will run each scan. See **ProcessTime** and **MaxProcTime**.	read only LONG µs	n/a	n/a

MemoryFree	Station Status: **Memory Free** Keyboard: **Status Table** ≈ line 32 CRBasic: **variable = status.keyword** Unallocated SRAM memory on the CPU. All free memory may not be available for data tables. As memory is allocated and freed, holes of unallocated memory, which are unusable for final-data memory, may be created.	read only LONG bytes	**3794224**	≥ **4096**
MemorySize	Station Status: **Memory** Keyboard: **Status Table** ≈ line 31 CRBasic: **variable = status.keyword** Total SRAM in the CR800. See the table *CR800 Memory Allocation* (p. 352).	read only LONG bytes	**4194304**	**4194304**
Messages	Keyboard: **Status Table** ≈ line 54 CRBasic: **variable = status.keyword** Contains a string of manually entered messages.	read/write STRING	n/a	n/a

Table 172. Status/Settings/DTI: N

Keyword	*Alias, Access, Description*	*Read/Write, Data Type, Units*	*Default Value*	*Normal Range*
Neighbors()	Settings Editor: **Neighbors Allowed** Keyboard: **Settings (comports)** CRBasic: **variable = settings.keyword**; **SetSettings()** Array of integers indicating PakBus neighbors for communication ports. Array Element Number — Port Keyword **(1)** **ComRS232** **(2)** **ComME** **(3)** **ComSDC7** **(4)** **ComSDC8** **(5)** **ComSDC10** **(6)** **ComSDC11** **(7)** **Com1** **(8)** **Com2** See section *Neighbors* (p. 385).	read/write STRING	0, 0	n/a

Table 173. Status/Settings/DTI: O

Keyword	Alias, Access, Description	Read/Write, Data Type, Units	Default Value	Normal Range
OSDate	Station Status: **OS Date** Keyboard: **Status Table** ≈ line 4 CRBasic: **variable = status.keyword** Release date of the operating system in the format yymmdd	read only STRING	n/a	n/a
OSSignature	Station Status: **OS Signature** Keyboard: **Status Table** ≈ line 5 CRBasic: **variable = status.keyword** Signature of the operating system.	read only LONG	n/a	n/a
OSVersion	Station Status: **OS Version** Settings Editor: **OS Version** Keyboard: **Status Table** ≈ line 3 CRBasic: **variable = status.keyword** Version of the operating system in the CR800.	read only STRING	n/a	n/a

Table 174. Status/Settings/DTI: P

Keyword	Alias, Access, Description	Read/Write, Data Type, Units	Default Value	Normal Range
PakBusAddress	Settings Editor: **PakBus Address** Keyboard: **Settings (General)** ≈ line 5 CRBasic: **variable = settings.keyword**; **SetSettings()** PakBus address for this CR800. Assign a unique address if this CR800 is to be placed in a PakBus network. Addresses 1 to 4094 are valid, but those ≥ 4000 are usually reserved for datalogger support software *(p. 93)*. Many Campbell Scientific devices, including dataloggers, default to address 1.	read/write LONG	1	1 to 3999
PakBusEncryptionKey	Settings Editor: **PakBus Encryption Key** Keyboard: **Settings (General)** ≈ line 9 CRBasic: **variable = settings.keyword**; **SetSettings()**	read/write STRING	none	0 to 63 characters
PakBusNodes	Obsolete. Replaced by/aliased to **CommsMemAlloc**			
PakBusPort	Settings Editor: **PakBus/TCP Service Port** Keyboard: **Settings (TCP/IP)** ≈ line 16 CRBasic: **variable = settings.keyword**; **SetSettings()** Replaces old **TCPPort** setting. Effective only if the PPP service is enabled using a PPP-compatible *network link* *(p. 629)*. Specifies the TCP service port for PakBus communications with the CR800. Unless firewall issues exist, this setting probably does not need to be changed from its default value.	read only LONG	6785	0 to 65535

PakBusRoutes	Settings Editor: **Routes** Keyboard: **Status Table** ≈ line 53 CRBasic: **variable = status.keyword** Lists routes or router neighbors known to the CR800 at the time the setting was read. Each route is represented by four components separated by commas and enclosed in parentheses: **(port, via neighbor adr, pakbus adr, response time)** See section *PakBusRoutes* ***(p. 384)***.	read only STRING	(1, 4089, 4089, 1000)	?
PakBusTCPClients	Settings Editor: **PakBus/TCP Clients** Alias: **PakBus/TCP Client Connections** Keyboard: **Settings (TCP/IP)** ≈ line 33 CRBasic: **variable = settings.keyword**; **SetSettings()** Up to four addresses specifying outgoing PakBus/TCP connections that the datalogger is to maintain. Formal syntax of the setting: TCP Connections := 4{ address_pair }. address_pair := "(" address "," tcp-port ")". address := domain-name | ip-address. Example of two connections: (192.168.4.203, 6785) (JOHN_DOE.server.com, 6785)	read/write STRING	**(, 0)**	n/a
PakBusTCPEnabled	Settings Editor: ??? Keyboard: **Settings (TCP/IP)** ≈ line 39 Aliased from: **ServicesEnabled()** CRBasic: **variable = settings.keyword**; **SetSettings()** Enables (**True**) or disables (**False**) the PakBus TCP service.	read/write BOOLEAN	True	**True** or **False**
PakBusTCPPassword	Settings Editor: **PakBus/TCP Password** Keyboard: **Settings (General)** ≈ line 10 CRBasic: **variable = settings.keyword**; **SetSettings()** When active (not blank), a log-in process using an MD5 digest of a random number and this password must take place successfully before PakBus communications can proceed over an IP socket.	read/write STRING	none (inactive)	0 to 63 characters
PanelTemp	Station Status: **Panel Temperature** Keyboard: **Status Table** ≈ line 15 CRBasic: **variable = status.keyword** Current wiring-panel temperature. Measurement is made in background calibration.	read only FLOAT °C	n/a	-40 to 85
PingEnabled	Settings Editor: **Ping Enabled** Keyboard: **Settings (TCP/IP)** ≈ line 38 CRBasic: **variable = settings.keyword**; **SetSettings()** Enables (**True**) or disables (**False**) the ICMP ping service. Replaces old **ServicesEnabled()**.	read/write BOOLEAN	**True**	**True** or **False**
PortConfig()	Keyboard: **Status Table** ≈ line 51 CRBasic: **variable = status.keyword** Configuration of **C** terminals. Array elements in numeric order of **C** terminals.	read only STRING array	**Input**	**Input**, **Output**, **SDM**, **SDI-12**, **Tx**, **Rx**

PortStatus()	Keyboard: **Status Table** ≈ line 50 CRBasic: **variable = status.keyword** States of **C** terminals configured for control. On/high (**True**) or off/low (**False**). Array elements in numeric order of **C** terminals. Updated every 500 ms.	read/write BOOLEAN array	**False**	**True** or **False**
pppDial	Settings Editor: **PPP Dial** Keyboard: **Settings (TCP/IP)** ≈ line 28 CRBasic: **variable = settings.keyword**; **SetSettings()** Specifies the dial string that follows ATD (e.g., #777 for Redwing CDMA) or a list of AT commands separated by ';' (e.g., ATV1; AT+CGATT=0;ATD*99***1#), that are used to initialize and dial through a modem before a PPP connection is attempted. A blank string means that dialing is not necessary before a PPP connection is established. CRBasic program will recompile if changed from NULL to not NULL, or from not NULL to NULL.	read/write STRING	none	n/a
pppDialResponse	Settings Editor: **PPP Dial Response** Keyboard: **Settings (TCP/IP)** ≈ line 29 CRBasic: **variable = settings.keyword**; **SetSettings()** Specifies the response expected after dialing a modem before a PPP connection can be established. CRBasic program will recompile if changed from NULL to not NULL, or from not NULL to NULL.	read/write STRING	CONNECT	n/a
pppInterface	Settings Editor: **PPP Interface** Keyboard: **Settings (TCP/IP)** ≈ line 23 CRBasic: **variable = settings.keyword**; **SetSettings()** Controls which CR800 communication port PPP service is configured for. Warning: if this value is set to **CS I/O ME**, do not attach any other devices to the **CS I/O** port. A change will cause the CRBasic program to recompile.	read/write LONG	0 (inactive)	???
pppIPAddr	Keyboard: **Settings (TCP/IP)** ≈ line 24 Settings Editor: **PPP IP Address** CRBasic: **variable = settings.keyword**; **SetSettings()** Specifies the IP address that is used for the PPP interface if that interface is active (the **PPP Port** / **PPP Interface** setting needs to be set to something other than **Inactive**). Syntax is **nnn.nnn.nnn.nnn**. A value of **0.0.0.0** or an empty string will indicate that DHCP must be used to resolve this address as well as the subnet mask.	read/write STRING	0.0.0.0	0–255.0–255.0–255.0–255
pppIPMask	Settings Editor: ??? Keyboard: **Status Table** ≈ line 25 CRBasic: **variable = settings.keyword**; **SetSettings()**	read/write STRING	none	0–255.0–255.0–255.0–255

pppPassword	Settings Editor: **PPP tab: Password** Keyboard: **Status Table** ≈ line 27 CRBasic: **variable = settings.keyword**; **SetSettings()** Specifies the password that is used to log in to the PPP server when the PPP interface setting is set to one of the client selections. Also specifies the password that must be provided by the PPP client when the PPP interface setting is set to one of the server selections.	read/write STRING	none	0 to 63 characters
pppUsername	Settings Editor: **PPP User Name** Keyboard: **Settings (TCP/IP)** ≈ line 26 CRBasic: **variable = settings.keyword**; **SetSettings()** Specifies the user name that is used to log in to the PPP server.	read/write STRING	none	0 to 63 characters
ProcessTime	Keyboard: **Status Table** ≈ line 40 CRBasic: **variable = status.keyword** Processing time of the last scan. Time is measured from the end of the **EndScan** instruction (after the measurement event is set) to the beginning of the **EndScan** (before the wait for the measurement event begins) for the subsequent scan. Calculated on-the-fly. See *MeasureTime* (p. 595), *MaxProcTime* (p. 595), *SkippedScan* (p. 603), *MaxProcTime* (p. 595).	read only LONG µs	0	n/a
ProgErrors	Keyboard: **Status Table** ≈ line 25 CRBasic: **variable = status.keyword** Number of compile or runtime errors for the running program.	read-only LONG counts	0	≥ 0
ProgName	Station Status: **Current Program** Keyboard: **Status Table** ≈ line 10 CRBasic: **variable = status.keyword** Name of current (running) program	read only STRING	n/a	n/a
ProgSignature	Station Status: **Program Signature** Keyboard: **Status Table** ≈ line 13 CRBasic: **variable = status.keyword** Signature of the text of the running program file (includes comments). Does not change with operating-system changes. See *RunSignature* (p. 602). The CRBasic pre-compiler gets this signature with command line parameter **–s**. The output will add a line of the following form: "Progname.CReX – Compiled in PipelineMode. ProgSignature = XXXX."	read only LONG	n/a	n/a

Table 175. Status/Settings/DTI: R

Keyword	Alias, Access, Description	Read/Write, Data Type, Units	Default Value	Normal Range
Record	Keyboard: **Status Table**, **DTI Table** ≈ header left CRBasic: **variable = Public.Record(1,1)** Record number increments only when the record is requested by support software. If record number is needed for a CRBasic program operation, use **Record** in the **Public** table. When using **Public.Record(1,1)**, the **NextScan** that occurs in the MAIN sequence (not in any of the slow sequences) increments the record number.	read only LONG	n/a	0 to 2^{32}
RevBoard	Keyboard: **Status Table** ≈ line 8 CRBasic: **variable = status.keyword** Electronics board revision in the form **xxx.yyy**, where **xxx** = hardware revision number; **yyy** = clock chip software revision. Stored in flash memory.	read only STRING	n/a	n/a
RouteFilters	Settings Editor: **Route Filters** Keyboard: **Settings (General)** ≈ line 12 CRBasic: **variable = settings.keyword**; **SetSettings()** Restricts routing or processing of some PakBus message types. See section *Route Filters* *(p. 384)*	read/write STRING	(0, 0, 0, 0)	0 to 351 characters
RS232Handshaking	Settings Editor: **RS232 Hardware Handshaking Buffer Size** Keyboard: **Settings (General)** ≈ line 21 CRBasic: **variable = settings.keyword**; **SetSettings()** If non-zero, hardware handshaking is active on the **RS-232** port. This setting specifies the maximum packet size sent between checking for CTS.	read/write LONG	**0**	**0** to **65535**
RS232Power	Settings Editor: **RS232 Always On** Keyboard: **Settings (General)** ≈ line 20 CRBasic: **variable = settings.keyword**; **SetSettings()** Controls whether the RS-232 port will remain active even when communication is not taking place. If RS-232 handshaking is enabled (**RS232Handshaking** is non-zero), this setting must be set to **True**.	read/write BOOLEAN	**False**	**True** or **False**
RS232Timeout	Settings Editor: **RS232 Hardware Handshaking Timeout** Keyboard: **Settings (General)** ≈ line 22 CRBasic: **variable = settings.keyword**; **SetSettings()** RS-232 hardware-handshaking timeout. Specifies the time that the datalogger will wait between packets if CTS is not asserted.	read/write IEEE4 tens of ms	**0**	???

RunSignature	Station Status: **Run Signature** Keyboard: **Status Table** ≈ line 12 CRBasic: **variable = settings.keyword**; **SetSettings()** Signature of the binary (compiled) structure of the running program. Value is independent of comments or non-functional changes. Often changes with operating-system changes. See *ProgSignature* (p. 600). The pre-compiler can get the program text, but generating the binary signature is not feasible due to endian, data size, and compiler structure layout differences between the PC and the CR800.	read only LONG	n/a	n/a

Table 176. Status/Settings/DTI: S

Keyword	*Alias, Access, Description*	*Read/Write, Data Type, Units*	*Default Value*	*Normal Range*
SecsPerRecord()	AKA: **Data-table interval** Keyboard: **DataTableInfo** ≈ line 4 CRBasic: **variable = status.keyword** Reports the data-output interval for a data table.	read only LONG array seconds	n/a	n/a
Security(1)	Settings Editor: **Security Level 1** AKA: **Security Code 1** Keyboard: **Settings (General)** ≈ line 4 CRBasic: **variable = settings.keyword**; **SetSettings()** First level in an array of three security codes. Not shown if security is enabled. **0** disables all security. See *Security — Overview* (p. 90).	read/write LONG	**0**	**0** to **65535** (**0** = deactivated)
Security(2)	Settings Editor: **Security Level 2** AKA: **Security Code 2** Keyboard: **Settings (General)** ≈ line 4 CRBasic: **variable = settings.keyword**; **SetSettings()** Second level in an array of three security codes. Not shown if security is enabled. **0** disables levels 2 and 3. See *Security(1)* (p. 602) and section *Security — Overview* (p. 90).	read/write LONG	**0**	**0** to **65535** (**0** = deactivated)
Security(3)	Settings Editor: **Security Level 3** AKA: **Security Code 3** Keyboard: **Settings (General)** ≈ line 4 CRBasic: **variable = settings.keyword**; **SetSettings()** Third level in an array of three security codes. Not shown if security is enabled. **0** disables level 3. See *Security(1)* (p. 602) and section *Security — Overview* (p. 90).	read/write LONG	**0**	**0** to **65535** (**0** = deactivated)
SerialNumber	Settings Editor: **Serial Number** Keyboard: **Status Table** ≈ line 7 CRBasic: **variable = status.keyword** CR800 serial number assigned by the factory. Stored in flash memory.	read only LONG	n/a	n/a

ServicesEnabled()	Obsolete. Replaced by/aliased to **HTTPEnabled**, **PakBusTCPEnabled**, **PingEnabled**, **TelnetEnabled**, **TLSEnabled**			
SkippedRecord()	Station Status: **Skipped Records in XXXX** Keyboard/display: **DataTableInfo** ≈ line 2 CRBasic: **variable = status.keyword** Reports how many records have been skipped in a data table. Array elements are in the order that data tables are declared in the CRBasic program.	read only LONG array counts	**0**	≥ **0** **0** = reset
SkippedScan	Station Status: **Skipped Scans** Keyboard: **Status Table** ≈ line 27 CRBasic: **variable = status.keyword** Number of *skipped program scans* ***(p. 463)*** that have occurred while running the current program instance. Does not include scans intentionally skipped as may occur with the use of **ExitScan** and **Do** / **Loop** instructions. Includes the number of CPI frame errors. See *MeasureTime* ***(p. 595)***, *MaxProcTime* ***(p. 595)***, *ProcessTime* ***(p. 600)***, *MaxProcTime* ***(p. 595)***.	read/write LONG counts	**0**	≥ **0** **0** = reset
SkippedSlowScan()	Station Status: **Skipped Slow Scans** Keyboard: **Status Table** ≈ line 29 CRBasic: **variable = status.keyword** Integer for each **SlowSequence** scan in the CRBasic program. Number of skipped scan. See *LastSlowScan* ***(p. 594)***, *MaxSlowProcTime* ***(p. 595)***, *SlowProcTime* ***(p. 603)***.	read/write LONG counts	**0**	≥ **0** **0** = reset
SkippedSystemScan()	Station Status: **Skipped System Scans** Keyboard: **Status Table** ≈ line 28 CRBasic: **variable = status.keyword** Number of scans skipped in the auto (background) calibration. Auto-calibration runs in a hidden slow-sequence type scan. Enter **0** to reset. See LastSystemScan ***(p. 594)***, MaxSystemProcTime ***(p. 595)***, SystemProcTime ***(p. 604)***, and section CR800 Auto Calibration — Overview ***(p. 91)***.	read/write LONG count	**0**	≥ **0** **0** = reset
SlowProcTime()	Keyboard: **Status Table** ≈ line 47 CRBasic: **variable = status.keyword** Integer for each **SlowSequence** scan in the CRBasic program. Indicates time required to process the scan. See *LastSlowScan* ***(p. 594)***, *MaxSlowProcTime* ***(p. 595)***, *SkippedSlowScan* ***(p. 603)***.	LONG µs	large number until **SlowSequence** runs.	
StartTime	Station Status: **Start Time** Keyboard: **Status Table** ≈ line 11 CRBasic: **variable = status.keyword** Time the program began running.	read-only NSEC date and time		
StartUpCode	Keyboard: **Status Table** ≈ line 24 CRBasic: **variable = status.keyword** Indicates why the running program was compiled. **True** indicates that the program was compiled due to the logger starting from a power-down condition. **False** indicates that the compile was caused by either a **Program Send**, a **File Control** transaction, or a watchdog reset.	read-only BOOLEAN	**False**	**True** or **False**

StationName	Station Status: **Reported Station Name** Settings Editor: **Station Name** Keyboard: **Status Table** ≈ line 9; Keyboard: **Settings (General)** ≈ line 1 CRBasic: **variable = settings.keyword**; **SetSettings()**; **StationName()** Stores a station name in flash memory. This is not automatically the same station name as that entered in datalogger support software. See the discussion of station names in the datalogger support software manuals. The datalogger support software station name is what appears in the header of files of data retrieved to a PC. This station name can be sampled into a data table using data table access syntax *(p. 165).*	read/write STRING		
SW12Volts	Keyboard: **Status Table** ≈ line 52 CRBasic: **variable = status.keyword** Status of switched, 12 Vdc terminal	read/write BOOLEAN	**False**	**True** or **False**
SystemProcTime	AKA: **Background Calibration Processing Time** Keyboard: **Status Table** ≈ line 46 CRBasic: **variable = status.keyword** Time required to process auto (background) calibration. See LastSystemScan *(p. 594),* MaxSystemProcTime *(p. 595),* SystemProcTime *(p. 604),* and section CR800 Auto Calibration — Overview *(p. 91).*	read-only FLOAT µs	large number until auto calibration runs	

Table 177. Status/Settings/DTI: T

Keyword	*Alias, Access, Description*	*Read/Write, Data Type, Units*	*Default Value*	*Normal Range*
TCPClientConnections	Obsolete. Aliased to/replaced by *PakBusTCPClients* *(p. 598).*			
TCPPort	Obsolete. Aliased to/replaced by **PakBusPort** *(p. 597).*			
TelnetEnabled	Settings Editor: **Telnet Enabled** Aliased from: **ServicesEnabled()** Keyboard: **Settings (TCP/IP)** ≈ line 37 CRBasic: **variable = settings.keyword**; **SetSettings()** Enables (**True**) or disables (**False**) the Telnet service.	read/write BOOLEAN	**True**	**True** or **False**
TimeStamp	Keyboard: **Status Table** header right Keyboard: **DTI Table** header right CRBasic: **variable = status.keyword** Scan-time that a record was generated. See *Time Stamps* *(p. 295).*	read-only NSEC time	n/a	n/a
TLS Certificate	Settings Editor: **TLS | Set Certificate** AKA: **TLS Certificate File Name** Specifies the file name for the x509 certificate in PEM format.	STRING	n/a	n/a

TLS Enabled	AKA: **Transport Layer Security (TLS) Enabled** Obsolete. Replaced by/aliased to **TLSPassword** *(p. 605)*.			
TLS Private Key	Settings Editor: **TLS | Set Private Key** Alias: **TLS Private Key File Name** CRBasic: **variable = settings.keyword**; **SetSettings()** Specifies the file name for the private key in RSA format.	STRING	n/a	n/a
TLSConnections	Settings Editor: **Max TLS Server Connections** Keyboard: **Settings (TCP/IP)** ≈ line 41 CRBasic: **variable = settings.keyword**; **SetSettings()** Relates to the CR800 being a server and the maximum number of concurrent TLS clients that can be connected.	read/write **LONG**	0	0 to 255
TLSPassword	Settings Editor: **TLS Private Key Password** Keyboard: **Settings (TCP/IP)** ≈ line 42 CRBasic: **variable = settings.keyword**; **SetSettings()** Specifies the password that is used to decrypt the private key file.	read/write STRING	none	n/a
TLSstatus	Settings Editor: **TLS Status** AKA: **Transport Layer Security (TLS) Status** Keyboard: **Settings (TCP/IP)** ≈ line 20 CRBasic: **variable = settings.keyword**; **SetSettings()**	read only STRING	none	?

Table 178. Status/Settings/DTI: U

Keyword	***Alias, Access, Description***	***Read/Write, Data Type, Units***	***Default Value***	***Normal Range***
UDPBroadcastFilter	Settings Editor: **IP Broadcast Filtered** Keyboard: **Settings (TCP/IP)** ≈ line 34	read/write UINT2	**0**	**0** to **65535**
USRDriveFree	Keyboard: **Settings (General)** ≈ line 17 CRBasic: **variable = settings.keyword**; **SetSettings()** Bytes remaining on the USR: drive. USR: drive is user-created and normally used to store .jpg and other files.	read only LONG bytes	**0**	?
USRDriveSize	Settings Editor: **USR: Drive Size** Keyboard: **Status Table** ≈ line 19 CRBasic: **variable = settings.keyword**; **SetSettings()** Configures the USR: drive. If **0**, the drive is removed. If non-zero, the drive is created. A change will cause the CRBasic program to recompile.	read/write LONG bytes	**0**	**8192** minimum

UTCOffset	Settings Editor: **UTC Offset** Keyboard/display: **Settings (General)** ≈ line 15 CRBasic: **variable = settings.keyword**; **SetSettings()** Difference between local time (CR800 clock) and UTC. Used in email and HTML headers (these protocols require the time stamp to be UTC), and by **GPS()**, **NetworkTimeProtocol()**, and **DaylightSavingTime()** instructions.	read/write LONG seconds	-1 (disabled)	-43200 to 43200 (-1=disable)

Table 179. Status/Settings/DTI: V

Keyword	*Alias, Access, Description*	*Read/Write, Data Type, Units*	*Default Value*	*Normal Range*
VarOutOfBound	Station Status: **VarOutOfBound** Keyboard/display: **Status Table** ≈ line 26 CRBasic: **variable = status.keyword** Number of attempts to write to an array outside of the declared size. The write does not occur. Indicates a CRBasic program error. If an array is used in a loop or expression, the pre-compiler and compiler do not check to see if an array is accessed out-of-bounds (i.e., accessing an array with a variable index such as arr(index) = arr(index–1), where index is a variable).	read only LONG counts	**0**	≥ **0** **0** = reset
Verify()	Settings Editor: **Verify Interval** AKA: **Communication Ports Verification Intervals** Keyboard: **Settings (comports)** CRBasic: **variable = settings.keyword**; **SetSettings()** Array of integers indicating the interval that is reported as the link verification interval in the PakBus hello transaction messages. Indirectly governs the rate at which the CR800 attempts to start a hello transaction with a neighbor if no other communication has taken place within the interval. Array Element Number — Port Keyword **(1)** **ComRS232** **(2)** **ComME** **(3)** **ComSDC7** **(4)** **ComSDC8** **(5)** **ComSDC10** **(6)** **ComSDC11** **(7)** **Com1** **(8)** **Com2** See table Baudrate(), Beacon(), and Verify() Details.	read/write LONG seconds	**0**	**0** to **2147483648**

Table 180. Status/Settings/DTI: W

Keyword	*Alias, Access, Description*	*Read/Write, Data Type, Units*	*Default Value*	*Normal Range*
WatchdogErrors	Keyboard: **Status Table** ≈ line 14 Station Status: **Watchdog Errors** CRBasic: **variable = status.keyword** Number of watchdog errors that have occurred while running this program. Resets automatically when a new program is compiled.	read only LONG counts	**0**	≥ **0** **0** = reset

Appendix C. Serial Port Pinouts

C.1 CS I/O Communication Port

Pin configuration for the CR800 CS I/O port is listed in table *CS I/O Pin Description* (p. 609).

Table 181. CS I/O Pin Description

ABR: Abbreviation for the function name.
PIN: Pin number.
O: Signal Out of the CR800 to a peripheral.
I: Signal Into the CR800 from a peripheral.

PIN	ABR	I/O	***Description***
1	5 Vdc	O	5V: Sources 5 Vdc, used to power peripherals.
2	SG		Signal Ground: Provides a power return for pin 1 (5V), and is used as a reference for voltage levels.
3	RING	I	Ring: Raised by a peripheral to put the CR800 in the telecommunication mode.
4	RXD	I	Receive Data: Serial data transmitted by a peripheral are received on pin 4.
5	ME	O	Modem Enable: Raised when the CR800 determines that a modem raised the ring line.
6	SDE	O	Synchronous Device Enable: Used to address Synchronous Devices (SDs), and can be used as an enable line for printers.
7	CLK/HS	I/O	Clock/Handshake: Used with the SDE and TXD lines to address and transfer data to SDs. When not used as a clock, pin 7 can be used as a handshake line (during printer output, high enables, low disables).
8	+12 Vdc		
9	TXD	O	Transmit Data: Serial data are transmitted from the CR800 to peripherals on pin 9; logic-low marking (0V), logic-high spacing (5V), standard-asynchronous ASCII, 8 data bits, no parity, 1 start bit, 1 stop bit, 300, 1200, 2400, 4800, 9600, 19,200, 38,400, 115,200 baud (user selectable).

C.2 RS-232 Communication Port

C.2.1 Pin-Out

Pin configuration for the CR800 **RS-232** nine-pin port is listed in table *CR800 RS-232 Pin-Out* (p. 610). Information for using a null modem with **RS-232** is given in table *Standard Null-Modem Cable or Adapter-Pin Connections* (p. 611).

The CR800 **RS-232** port functions as either a DCE (data communication equipment) or DTE (data terminal equipment) device. For **RS-232** to function as a DTE device, a null modem cable is required. The most common use of **RS-232** is as a connection to a computer DTE device. A standard DB9-to-DB9 cable can

connect the computer DTE device to the CR800 DCE device. The following table describes **RS-232** pin function with standard DCE-naming notation.

Note Pins 1, 4, 6, and 9 function differently than a standard DCE device. This is to accommodate a connection to a modem or other DCE device via a null modem.

Table 182. CR800 RS-232 Pin-Out

PIN: pin number
O: signal out of the CR800 to a RS-232 device.
I: signal into the CR800 from a RS-232 device.
X: signal has no connection (floating).

PIN	DCE Function	Logger Function	I/O	Description
1	DCD	DTR (tied to pin 6)	O[1]	Data terminal ready
2	TXD	TXD	O	Asynchronous data transmit
3	RXD	RXD	I	Asynchronous data receive
4	DTR	N/A	X[1]	Not connected
5	GND	GND	GND	Ground
6	DSR	DTR	O[1]	Data terminal ready
7	CTS	CTS	I	Clear to send
8	RTS	RTS	O	Request to send
9	RI	RI	I[1]	Ring

[1] Different pin function compared to a standard DCE device. These pins will accommodate a connection to modem or other DCE devices via a null-modem cable.

C.2.2 Power States

The **RS-232** port is powered under the following conditions: 1) when the setting **RS232Power** is set or 2) when the **SerialOpen()** for ***COMRS232*** is used in the program. These conditions leave **RS-232** on with no timeout. If **SerialClose()** is used after **SerialOpen(),** the port is powered down and left in a sleep mode waiting for characters to come in.

Under normal operation, the port is powered down waiting for input. Upon receiving input there is a 40 second software timeout before shutting down. The 40 second timeout is generally circumvented when communicating with *datalogger support software* (p. 93) because it sends information as part of the protocol that lets the CR800 know it can shut down the port.

When in sleep mode, hardware is configured to detect activity and wake up. Sleep mode has the penalty of losing the first character of the incoming data stream. PakBus takes this into consideration in the "ring packets" that are preceded with extra sync bytes at the start of the packet. **SerialOpen()** leaves the interface powered-up, so no incoming bytes are lost.

When the logger has data to send via **RS-232**, if the data are not a response to a received packet, such as sending a beacon, then it will power up the interface, send the data, and return to sleep mode with no 40 second timeout.

Table 183. Standard Null-Modem Cable or Adapter-Pin Connections

DB9 Socket #		*DB9 Socket #*
1 & 6	———————————	4
2	———————————	3
3	———————————	2
4	———————————	1 & 6
5	———————————	5
7	———————————	8
8	———————————	7
9	most null modems have no connection[1]	9

[1] If the null-modem cable does not connect pin nine to pin nine, the modem will need to be configured to output a RING (or other characters previous to the DTR being asserted) on the modem TX line to wake the datalogger and activate the DTR line or enable the modem.

Appendix D. ASCII / ANSI Table

Reading List:
- *Term. ASCII / ANSI* (p. 481)
- *ASCII / ANSI table* (p. 613)

American Standard Code for Information Interchange (ASCII) / American National Standards Institute (ANSI)

Table 184. Decimal and hexadecimal Codes and Characters Used with CR800 Tools

Dec	Hex	Keyboard Display	LoggerNet	Hyper Terminal	Dec	Hex	Keyboard Display	LoggerNet	Hyper Terminal
0	0		NULL	NULL	128	80		€	Ç
1	1		□	☺	129	81		□	ü
2	2		□	☻	130	82		‚	é
3	3		□	♥	131	83		ƒ	â
4	4		□	♦	132	84		„	ä
5	5		□	♣	133	85		…	à
6	6		□	♠	134	86		†	å
7	7		□	•	135	87		‡	ç
8	8		□	◘	136	88		ˆ	ê
9	9			ht	137	89		‰	ë
10	a		lf	lf	138	8a		Š	è
11	b		□	vt	139	8b		‹	ï
12	c		□	ff	140	8c		Œ	î
13	d		cr	cr	141	8d		□	ì
14	e		□	♫	142	8e		Ž	Ä
15	f		□	☼	143	8f		□	Å
16	10		□	►	144	90		□	É
17	11		□	◄	145	91		'	æ
18	12		□	↕	146	92		'	Æ
19	13		□	‼	147	93		"	ô
20	14		□	¶	148	94		"	ö
21	15		□	§	149	95		•	ò
22	16		□	▬	150	96		-	û
23	17		□	↨	151	97		-	ù
24	18		□	↑	152	98		˜	ÿ
25	19		□	↓	153	99		™	Ö
26	1a		□	→	154	9a		š	Ü
27	1b		□		155	9b		›	¢

Table 184. Decimal and hexadecimal Codes and Characters Used with CR800 Tools

Dec	Hex	Keyboard Display	LoggerNet	Hyper Terminal	Dec	Hex	Keyboard Display	LoggerNet	Hyper Terminal
28	1c		□	∟	156	9c		œ	£
29	1d		□	↔	157	9d		□	¥
30	1e		□	▲	158	9e		ž	Pt
31	1f		□	▼	159	9f		Ÿ	*f*
32	20	SP	SP	SP	160	a0			á
33	21	!	!	!	161	a1		¡	í
34	22	"	"	"	162	a2		¢	ó
35	23	#	#	#	163	a3		£	ú
36	24	$	$	$	164	a4		¤	ñ
37	25	%	%	%	165	a5		¥	Ñ
38	26	&	&	&	166	a6		¦	ª
39	27	'	'	'	167	a7		§	º
40	28	(	(	(	168	a8		¨	¿
41	29	)	)	)	169	a9		©	⌐
42	2a	*	*	*	170	aa		ª	¬
43	2b	+	+	+	171	ab		«	½
44	2c	,	,	,	172	ac		¬	¼
45	2d	-	-	-	173	ad			¡
46	2e	.	.	.	174	ae		®	«
47	2f	/	/	/	175	af		¯	»
48	30	0	0	0	176	b0		°	░
49	31	1	1	1	177	b1		±	▒
50	32	2	2	2	178	b2		²	▓
51	33	3	3	3	179	b3		³	│
52	34	4	4	4	180	b4		´	┤
53	35	5	5	5	181	b5		µ	╡
54	36	6	6	6	182	b6		¶	╢
55	37	7	7	7	183	b7		·	╖
56	38	8	8	8	184	b8		¸	╕
57	39	9	9	9	185	b9		¹	╣
58	3a	:	:	:	186	ba		º	║
59	3b	;	;	;	187	bb		»	╗
60	3c	<	<	<	188	bc		¼	╝
61	3d	=	=	=	189	bd		½	╜
62	3e	>	>	>	190	be		¾	╛

Table 184. Decimal and hexadecimal Codes and Characters Used with CR800 Tools

Dec	Hex	Keyboard Display	LoggerNet	Hyper Terminal	Dec	Hex	Keyboard Display	LoggerNet	Hyper Terminal
63	3f	?	?	?	191	bf		¿	┐
64	40	@	@	@	192	c0		À	└
65	41	A	A	A	193	c1		Á	┴
66	42	B	B	B	194	c2		Â	┬
67	43	C	C	C	195	c3		Ã	├
68	44	D	D	D	196	c4		Ä	─
69	45	E	E	E	197	c5		Å	┼
70	46	F	F	F	198	c6		Æ	╞
71	47	G	G	G	199	c7		Ç	╟
72	48	H	H	H	200	c8		È	╚
73	49	I	I	I	201	c9		É	╔
74	4a	J	J	J	202	ca		Ê	╩
75	4b	K	K	K	203	cb		Ë	╦
76	4c	L	L	L	204	cc		Ì	╠
77	4d	M	M	M	205	cd		Í	═
78	4e	N	N	N	206	ce		Î	╬
79	4f	O	O	O	207	cf		Ï	╧
80	50	P	P	P	208	d0		Ð	╨
81	51	Q	Q	Q	209	d1		Ñ	╤
82	52	R	R	R	210	d2		Ò	╥
83	53	S	S	S	211	d3		Ó	╙
84	54	T	T	T	212	d4		Ô	╘
85	55	U	U	U	213	d5		Õ	╒
86	56	V	V	V	214	d6		Ö	╓
87	57	W	W	W	215	d7		×	╫
88	58	X	X	X	216	d8		Ø	╪
89	59	Y	Y	Y	217	d9		Ù	┘
90	5a	Z	Z	Z	218	da		Ú	┌
91	5b	[	[	[	219	db		Û	█
92	5c	\	\	\	220	dc		Ü	▄
93	5d	]	]	]	221	dd		Ý	▌
94	5e	^	^	^	222	de		Þ	▐
95	5f	_	_	_	223	df		ß	▀
96	60	`	`	`	224	e0		à	α
97	61	a	a	a	225	e1		á	ß
98	62	b	b	b	226	e2		â	Γ

Table 184. Decimal and hexadecimal Codes and Characters Used with CR800 Tools

Dec	Hex	Keyboard Display	LoggerNet	Hyper Terminal	Dec	Hex	Keyboard Display	LoggerNet	Hyper Terminal
99	63	c	c	c	227	e3		ã	π
100	64	d	d	d	228	e4		ä	Σ
101	65	e	e	e	229	e5		å	σ
102	66	f	f	f	230	e6		æ	µ
103	67	g	g	g	231	e7		ç	τ
104	68	h	h	h	232	e8		è	Φ
105	69	i	i	i	233	e9		é	Θ
106	6a	j	j	j	234	ea		ê	Ω
107	6b	k	k	k	235	eb		ë	δ
108	6c	l	l	l	236	ec		ì	∞
109	6d	m	m	m	237	ed		í	φ
110	6e	n	n	n	238	ee		î	ε
111	6f	o	o	o	239	ef		ï	∩
112	70	p	p	p	240	f0		ð	≡
113	71	q	q	q	241	f1		ñ	±
114	72	r	r	r	242	f2		ò	≥
115	73	s	s	s	243	f3		ó	≤
116	74	t	t	t	244	f4		ô	⌠
117	75	u	u	u	245	f5		õ	⌡
118	76	v	v	v	246	f6		ö	÷
119	77	w	w	w	247	f7		÷	≈
120	78	x	x	x	248	f8		ø	°
121	79	y	y	y	249	f9		ù	·
122	7a	z	z	z	250	fa		ú	·
123	7b	{	{	{	251	fb		û	√
124	7c	|	|	|	252	fc		ü	ⁿ
125	7d	}	}	}	253	fd		ý	²
126	7e	~	~	~	254	fe		þ	■
127	7f		□	⌂	255	ff		ÿ	

Appendix E. FP2 Data Format

FP2 data are two-byte big-endian values. See the appendix *Endianness* (p. 619). Representing bits in each byte pair as ABCDEFGH IJKLMNOP, bits are described in table *FP2 Data-Format Bit Descriptions* (p. 617).

Table 185. FP2 Data-Format Bit Descriptions

Bit	Description
A	Polarity, 0 = +, 1 = –
B, C	Decimal locaters as defined in the table FP2 Decimal Locater Bits.
D - P	13-bit binary value, D being the *MSB* (p. 241). Largest 13-bit magnitude is 8191, but Campbell Scientific defines the largest-allowable magnitude as 7999

Decimal locaters can be viewed as a negative base-10 exponent with decimal locations as shown in table *FP2 Decimal-Locater Bits* (p. 617).

Table 186. FP2 Decimal-Locater Bits

B	C	Decimal Location
0	0	XXXX.
0	1	XXX.X
1	0	XX.XX
1	1	X.XXX

Appendix F. Endianness

Synonyms:

- "Byte order" and "endianness"
- "Little endian" and "least-significant byte first"
- "Big endian" and "most-significant byte first"

Endianness lies at the root of an instrument processor. It is determined by the processor manufacturer. A good discussion of endianness can be found at Wikipedia.com. Issues surrounding endianness in an instrument such as the CR800 datalogger are usually hidden by the operating system. However, the following CR800 functions bring endianness to the surface and may require some programming to accommodate differences:

- Serial input / output programming (*Serial I/O: Capturing Serial Data* (p. 238))
- Modbus programming (*Modbus* (p. 391))
- **MoveBytes()** instruction (see *CRBasic Editor Help*)
- **SDMGeneric()** instruction (see *CRBasic Editor Help*)
- Some PakBus instructions, like GetDataRecord (see *CRBasic Editor Help*)

For example, when the CR1000 datalogger receives data from a CR9000 datalogger, the byte order of a four byte IEEE4 or integer data value has to be reversed before the value shows properly in the CR1000.

Table 187. Endianness in Campbell Scientific Instruments

Little Endian Instruments	*Big Endian Instruments*
CR6 datalogger	CR200(X) Series dataloggers
CR9000X datalogger	CR800 Series dataloggers
CRVW Series dataloggers	CR1000 datalogger
CRS451 recording sensor	CR3000 datalogger
	CR5000 datalogger

Use of endianness is discussed in the following sections:

- Section *Reading Inverse-Format Modbus Registers* (p. 394)
- Appendix *FP2 Data Format* (p. 617)

Appendix G. Supporting Products Lists

Supporting products power and expand the measurement and control capability of the CR800. Products listed are manufactured by a Campbell Scientific group company unless otherwise noted. Consult product literature at *www.campbellsci.com* or a Campbell Scientific application engineer to determine what products are most suited to particular applications. The following listings are not exhaustive, but are current as of the manual publication date.

G.1 Dataloggers — List

Related Topics:
- *Datalogger — Quickstart* (p. 43)
- *Datalogger — Overview* (p. 75)
- *Dataloggers — List* (p. 621)

Other Campbell Scientific datalogging devices can be used in networks with the CR800. Data and control signals can pass from device to device with the CR800 acting as a master, peer, or slave. Dataloggers communicate in a network via PakBus®, Modbus, DNP3, RS-232, SDI-12, or CANbus using the SDM-CAN module.

Table 188. Dataloggers

Model	*Description*
CR200X Series Dataloggers	Limited input, not expandable. Suited for a network of stations with a small numbers of specific inputs. Some models have built-in radio transceivers for spread-spectrum communication and various frequency bands.
CR800-Series Dataloggers	Limited input, but expandable. Suited for a network of stations with small numbers of specific inputs. The CR850 has a built-in keyboard and display.
CR6 Measurement and Control Datalogger	12 universal input terminals accept analog or pulse inputs. 4 I/O terminals are configurable for control or multiple communication protocols. This instrument is very versatile, expandable, and networkable.
CR1000 Measurement and Control System	16 analog input terminals, two pulse input terminals, eight control / I/O terminals. Expandable.
CR3000 Micrologger	28 analog input terminals, four pulse input terminals, eight control / I/O terminals. Faster than CR1000. Expandable.
CR9000X-Series Measurement, Control, and I/O Modules	High speed, configurable, modular, expandable

G.2 Measurement and Control Peripherals — Lists

Related Topics:
- *Measurement and Control Peripherals — Overview* (p. 84)
- *Measurement and Control Peripherals — Details* (p. 348)
- *Measurement and Control Peripherals — Lists* (p. 622)

G.3 Sensor-Input Modules Lists

Input peripherals expand sensor input capacity of the CR800, condition sensor signals, or distribute the measurement load.

G.3.1 Analog-Input Modules List

Analog-input modules increase CR800capacity. Some multiplexers allow multiplexing of excitation (analog output) terminals.

Table 189. Analog-Input Modules

Model	Description
AM16/32B	64 channels — configurable for many sensor types. Muliplex analog inputs and excitation.
AM25T	25 channels — multiplexes analog inputs. Designed for thermocouples and differential inputs

G.3.2 Pulse-Input Modules List

Related Topics:
- *Low-Level Ac Input Modules — Overview* (p. 348)
- *Low-Level Ac Measurements — Details* (p. 334)
- *Pulse Input Modules — Lists* (p. 622)

These modules expand and enhance pulse- and frequency-input capacity.

Table 190. Pulse-Input Modules

Model	Description
SDM-INT8	Eight-channel interval timer
SDM-SW8A	Eight-channel, switch-closure module
LLAC4	Four-channel, low-level ac module

G.3.3 Serial I/O Modules List

Serial I/O peripherals expand and enhance input capability and condition serial signals.

Table 191. Serial I/O Modules List	
Model	***Description***
SDM-SIO1	One-channel I/O expansion module
SDM-SIO4	Four-channel I/O expansion module
SDM-IO16	16-channel I/O expansion module

G.3.4 Vibrating-Wire Input Modules List

Vibrating-wire input modules improve the measurement of vibrating wire sensors.

Table 192. Vibrating-Wire Input Modules	
Model	***Description***
CDM-VW300	Two-channel dynamic Vspect vibrating-wire measurement device
CDM-VW305	Eight-channel dynamic Vspect vibrating-wire measurement device
AVW200 Series	Two-channel static Vspect vibrating-wire measurement device

G.3.5 Passive Signal Conditioners Lists

Signal conditioners modify the output of a sensor to be compatible with the CR800.

G.3.5.1 Resistive-Bridge TIM Modules List

Table 193. Resistive Bridge TIM[1] Modules	
Model	***Description***
4WFBS120	120 Ω, four-wire, full-bridge TIM module
4WFBS350	350 Ω, four-wire, full-bridge TIM module
4WFBS1K	1 kΩ, four-wire, full-bridge TIM module
3WHB10K	10 kΩ, three-wire, half-bridge TIM module
4WHB10K	10 kΩ, four-wire, half-bridge TIM module
4WPB100	100 Ω, four-wire, PRT-bridge TIM module
4WPB1K	1 kΩ, four-wire, PRT-bridge TIM module
[1] **T**eriminal **I**nput **M**odule	

G.3.5.2 Voltage-Divider Modules List

Table 194. Voltage Divider Modules	
Model	***Description***
VDIV10:1	10:1 voltage divider
VDIV2:1	2:1 voltage divider
CVD20	Six-channel 20:1 voltage divider

G.3.5.3 Current-Shunt Modules List

Table 195. Current-Shunt Modules

Model	Description
CURS100	100 ohm current-shunt module

G.3.5.4 Transient-Voltage Suppressors List

Table 196. Transient Voltage Suppressors

Model	Description
16980	Surge-suppressor kit for UHF/VHF radios
14462	Surge-suppressor kit for RF401 radio & CR206 datalogger
16982	Surge-suppressor kit for RF416 radio & CR216 datalogger
16981	Surge-suppressor kit for GOES transmitters
6536	4-wire surge protector for SRM-5A
4330	2-wire surge protector for land-line telephone modems
SVP48	General purpose, multi-line surge protector

G.3.6 Terminal-Strip Covers List

Terminal strips cover and insulate input terminals to improve thermocouple measurements.

Table 197. Terminal-Strip Covers

Datalogger	Terminal-Strip Cover Part Number
CR6	No cover available
CR800	No cover available
CR1000	17324
CR3000	18359

G.4 PLC Control Modules — Lists

Related Topics:
- *PLC Control — Overview* (p. 74)
- *PLC Control — Details* (p. 237)
- *PLC Control Modules — Overview* (p. 349)
- *PLC Control Modules — Lists* (p. 624)
- *PLC Control — Instructions* (p. 536)
- Switched Voltage Output — Specifications
- *Switched Voltage Output — Overview* (p. 78)
- *Switched Voltage Output — Details* (p. 101)

G.4.1 Digital-I/O Modules List

Digital I/O expansion modules expand the number of channels for reading or outputting or 5 Vdc logic signals.

Table 198. Digital I/O Modules

Model	Description
SDM-IO16	16-channel I/O expansion module

G.4.2 Continuous-Analog-Output (CAO) Modules List

CAO modules enable the CR800 to output continuous, adjustable voltages that may be required for strip charts and variable-control applications.

Table 199. Continuous-Analog-Output (CAO) Modules

Model	Description
SDM-AO4A	Four-channel, continuous analog voltage output
SDM-CVO4	Four-channel, continuous voltage and current analog output

G.4.3 Relay-Drivers — List

Relay drivers enable the CR800 to control large voltages.

Table 200. Relay-Drivers — Products

Model	Description
A21REL-12	Four relays driven by four control ports
A6REL-12	Six relays driven by six control ports / manual override
LR4	Four-channel latching relay
SDM-CD8S	Eight-channel dc relay controller
SDM-CD16AC	16-channel ac relay controller
SDM-CD16S	16-channel dc relay controller
SDM-CD16D	16-channel 0 or 5 Vdc output module
SW12V	One-channel 12 Vdc control circuit

G.4.4 Current-Excitation Modules List

Current excitation modules are usually used with the 229-L soil matric potential blocks.

Table 201. Current-Excitation Modules

Model	Description
CE4	Four-channel current excitation module
CE8	Eight-channel current excitation module

G.5 Sensors — Lists

Related Topics:
- *Sensors — Quickstart* (p. 42)
- *Measurements — Overview* (p. 62)
- *Measurements — Details* (p. 295)
- *Sensors — Lists* (p. 626)

Most electronic sensors, regardless of manufacturer, will interface with the CR800. Some sensors require external signal conditioning. The performance of some sensors is enhanced with specialized input modules.

G.5.1 Wired-Sensor Types List

The following wired-sensor types are available from Campbell Scientific for integration into CR800 systems. Contact a Campbell Scientific application engineer for specific model numbers and integration guidance.

Table 202. Wired Sensor Types

Air temperature	Pressure Roadbed water content
Relative humidity	Snow depth
Barometric pressure	Snow water equivalent
Conductivity	Soil heat flux
Digital camera	Soil temperature
Dissolved oxygen	Soil volumetric water content
Distance	Soil volumetric water content profile
	Soil water potential
Electrical current	Solar radiation
Electric field (Lightning)	Strain
Evaporation	Surface temperature
Freezing rain and ice	Turbidity
Fuel moisture and temperature	Visibility
Geographic position (GPS)	Water level and stage
Heat, vapor, and CO_2 flux	Water flow
Leaf wetness Net radiation	Water quality
ORP / pH	Water sampler
Precipitation	Water temperature
Present weather	Wind speed / wind direction

G.5.2 Wireless-Network Sensors List

Wireless sensors use the Campbell wireless sensor (CWS) spread-spectrum radio technology. The following wireless sensor devices are available.

Table 203. Wireless Sensor Modules

Model	*Description*
CWB100 Series	Radio-base module for datalogger.
CWS220 Series	Infrared radiometer
CWS655 Series	Near-surface volumetric soil water-content sensor
CWS900 Series	Configurable, remote sensor-input module

Table 204. Sensors Types Available for Connection to CWS900

Air temperature	Relative humidity
Dissolved oxygen	Soil heat flux
Infrared surface temperature	Soil temperature
Leaf wetness	Solar radiation
Pressure	Surface temperature
Quantum sensor	Wind speed / wind direction
Rain	

G.6 Data Retrieval and Telecommunication Peripherals — Lists

Related Topics:
- *Data Retrieval and Telecommunications — Quickstart* (p. 45)
- *Data Retrieval and Telecommunications — Overview* (p. 87)
- *Data Retrieval and Telecommunications — Details* (p. 370)
- *Data Retrieval and Telecommunication Peripherals — Lists* (p. 627)

Many telecommunication devices are available for use with the CR800 datalogger.

G.6.1 Keyboard Display — List

Related Topics:
- *Keyboard Display — Overview* (p. 82)
- *Keyboard Display — Details* (p. 430)
- *Keyboard Display — List* (p. 627)
- *Custom Menus — Overview* (p. 83, p. 555)

Table 205. Datalogger / Keyboard Display Availability and Compatibility[1]

Datalogger Model	*Compatible Keyboard Displays*
CR6	*CR1000KD*[2] *(p. 484)*, *CD100* *(p. 483)*, CD295
CR800	CR1000KD[2], CD100, CD295
CR850	Integrated keyboard display, CR1000KD[2], CD100, CD295
CR1000	CR1000KD[2], CD100, CD295
CR3000	Integrated keyboard display, CR1000KD[2] (requires special OS), CD100 (requires special OS),CD295

[1] Keyboard displays are either integrated into the datalogger or communicate through the **CS I/O** port.
[2] The CR1000KD can be mounted to a surface by way of the two #4-40 x 0.187 screw holes at the back.

G.6.2 Hardwire, Single-Connection Comms Devices List

Table 206. Hardwire, Single-Connection Comms Devices

Model	*Description*
SC32B	Optically isolated **CS I/O** to PC RS-232 interface (requires PC RS-232 cable)
SC929	**CS I/O** to PC RS-232 interface cable
SC-USB	Optically isolated **RS-232** to PC USB cable
17394	**RS-232** to PC USB cable (not optically isolated)
10873	**RS-232** to RS-232 cable, nine-pin female to nine-pin male
SRM-5A with SC932A	**CS I/O** to RS-232 short-haul telephone modems
SDM-CAN	Datalogger-to-CANbus Interface
FC100	Fiber optic modem. Two required in most installations.

G.6.3 Hardwire, Networking Devices List

Table 207. Hardwire, Networking Devices

Model	*Description*
MD485	RS-485 multidrop interface

G.6.4 TCP/IP Links — List

Table 208. TCP/IP Links

Model	Description
RavenX Series	Wireless, cellular, connects to **RS-232** port, PPP/IP key must be enabled to use CR800 IP stack.
NL240	Wireless network link interface, connects to **CS I/O** port.
NL201	Network link interface, connects to **CS I/O** port.

G.6.5 Telephone Modems List

Table 209. Telephone Modems

Model	Description
COM220	9600 baud
COM320	9600 baud, synthesized voice
RAVENX Series	Cellular network link

G.6.6 Private-Network Radios List

Table 210. Private-Network Radios

Model	Description
RF401 Series	Spread-spectrum, 100 mW, CS I/O connection to remote CR800 datalogger. Compatible with RF430.
RF430 Series	Spread-spectrum, 100 mW, USB connection to base PC. Compatible with RF400.
RF450	Spread-spectrum, 1 W
RF300 Series	VHF / UHF, 5 W, licensed, single-frequency

G.6.7 Satellite Transceivers List

Table 211. Satellite Transceivers

Model	Description
ST-21	Argos transmitter
TX320	HDR GOES transmitter
DCP200	GOES data collection platform

G.7 Data-Storage Devices — List

Related Topics:
- *Memory — Overview* (p. 86)
- *Memory — Details* (p. 351)
- *Data Storage Devices — List* (p. 629)

Data-storage devices allow you to collect data on-site with a small device and carry it back to the PC ("sneaker net").

Campbell Scientific mass-storage devices attach to the CR800 CS I/O port.

Table 212. Mass-Storage Devices

Model	Description
SC115	2 GB flash memory drive (thumb drive)

G.8 Datalogger Support Software — Lists

Reading List:
- *Datalogger Support Software — Quickstart* (p. 46)
- *Datalogger Support Software — Overview* (p. 93)
- *Datalogger Support Software — Details* (p. 429)
- *Datalogger Support Software — Lists* (p. 630)

Software products are available from Campbell Scientific to facilitate CR800 programming, maintenance, data retrieval, and data presentation. Starter software (table *Starter Software* (p. 630)) are those products designed for novice integrators. Datalogger support software products (table *Datalogger Support Software* (p. 630)) integrate CR800 programming, telecommunications, and data retrieval into a single package. *LoggerNet* clients (table *LoggerNet Clients* (p. 631)) are available for extended applications of *LoggerNet*. Software-development kits (table *Software-Development Kits* (p. 633)) are available to address applications not directly satisfied by standard software products. Limited support software for iOS, Android, and Linux applications are also available.

Note More information about software available from Campbell Scientific can be found at *www.campbellsci.com http://www.campbellsci.com*. Please consult with a Campbell Scientific application engineer for a software recommendation to fit a specific application.

G.8.1 Starter Software List

Short Cut, *PC200W*, and *VisualWeather* are designed for novice integrators but still have features useful in advanced applications.

Table 213. Starter Software

Model	Description
Short Cut	Easy-to-use CRBasic-programming wizard, graphical user interface; PC, Windows® compatible.
PC200W Starter Software	Easy-to-use, basic *datalogger support software* (p. 485) for direct telecommunication connections, PC, Windows® compatible.
VisualWeather	Easy-to use datalogger support software specialized for weather and agricultural applications, PC, Windows® compatible.

G.8.2 Datalogger Support Software — List

PC200W, *PC400*, *RTDAQ*, and *LoggerNet* provide increasing levels of power required for integration, programming, data retrieval and telecommunication applications. *Datalogger support software* (p. 93) for iOS, Android, and Linux applications are also available.

Table 214. Datalogger Support Software

Software	Compatibility	Description
PC200W Starter Software	PC, Windows	Basic datalogger support software for direct connect.
PC400	PC, Windows	Mid-level datalogger support software. Supports single dataloggers over most telecommunication options.
LoggerNet	PC, Windows	Top-level datalogger support software. Supports datalogger networks.
LoggerNet Admin	PC, Windows	Advanced *LoggerNet* for large datalogger networks.
LoggerNet Linux	Linux	Includes *LoggerNet Server* for use in a Linux environments and *LoggerNet Remote* for managing the server from a Windows environment.
RTDAQ	PC, Windows	Datalogger support software for industrial and real time applications.
VisualWeather	PC, Windows	Datalogger support software specialized for weather and agricultural applications.
LoggerLink	iOS and Android	Datalogger support software for iOS and Android devices. IP connection to datalogger only.

G.8.2.1 LoggerNet Suite List

The *LoggerNet* suite features a client-server architecture that facilitates a wide range of applications and enables tailoring software acquisition to specific requirements.

Table 215. LoggerNet Suite[1,2]

Software	Description
LoggerNetAdmin	Admin datalogger support software
LNLinux	Linux based *LoggerNet* server
LoggerNetRem	Enables administering to *LoggerNetAdmin* via TCP/IP from a remote PC.
LNDB	*LoggerNet* database software

Table 215. LoggerNet Suite[1,2]

Software	Description
LoggerNetData	Generates displays of real-time or historical data, post-processes data files, and generates reports. It includes *Split*, *RTMC*, *View Pro*, and *Data Filer*.
PC-OPC	Campbell Scientific OPC Server. Feeds datalogger data into third-party, OPC-compatible graphics packages.
PakBus Graph	Bundled with *LoggerNet*. Maps and provides access to the settings of a PakBus network.
RTMCPro	An enhanced version of *RTMC*. *RTMC Pro* provides additional capabilities and more flexibility, including multi-state alarms, email-on-alarm conditions, hyperlinks, and FTP file transfer.
RTMCRT	Allows viewing and printing multi-tab displays of real-time data. Displays are created in *RTMC* or *RTMC Pro*.
RTMC Web Server	Converts real-time data displays into HTML files, allowing the displays to be shared via an Internet browser.
CSIWEBS	Web server. Converts RTMC and RTMC Pro displays into HTML.
CSIWEBSL	Web server for Linux. Converts RTMC and RTMC Pro displays into HTML

[1]Clients require that *LoggerNet* — purchased separately — be running on the PC.

[2]*RTMC*-based clients require that *LoggerNet* or *RTDAQ* — purchased separately — be running on the PC.

G.8.3 Software Tools List

Table 216. Software Tools

Software	Compatibility	Description
Network Planner	PC, Windows	Available as part of the *LoggerNet* suite. Assists in design of networks and configuration of network elements.
Device Configuration Utility (*DevConfig*)	PC, Windows	Bundled with *PC400*, *LoggerNet*, and *RTDAQ*. Also availble at no cost at *www.campbellsci.com*. Used to configure settings and update operating systems for Campbell Scientific devices.

G.8.4 Software Development Kits List

Table 217. Software Development Kits

Software	Compatibility	Description
LoggerNet-SDK	PC, Windows	Allows software developers to create custom client applications that communicate through a *LoggerNet* server with any datalogger supported by *LoggerNet*. Requires *LoggerNet*.
LoggerNetS-SDK	PC, Windows	LoggerNet Server SDK. Allows software developers to create custom client applications that communicate through a *LoggerNet* server with any datalogger supported by *LoggerNet*. Includes the complete *LoggerNet* Server DLL, which can be distributed with the custom client applications.
JAVA-SDK	PC, Windows	Allows software developers to write Java applications to communicate with dataloggers.
TDRSDK	PC, Windows	Software developer kit for PC and Windows for communication with the TDR100 Time Domain Reflectometer.

G.9 Power Supplies — Products

Related Topics:
- Power Supplies — Specifications
- *Power Supplies — Quickstart* (p. 44)
- *Power Supplies — Overview* (p. 85)
- *Power Supplies — Details* (p. 98)
- *Power Supplies — Products* (p. 633)
- *Power Sources* (p. 99)
- *Troubleshooting — Power Supplies* (p. 469)

Several power supplies are available from Campbell Scientific to power the CR800.

G.9.1 Battery / Regulator Combinations List

Read More Information on matching power supplies to particular applications can be found in the Campbell Scientific Application Note "Power Supplies", available at *www.campbellsci.com*.

Table 218. Battery / Regulator Combinations	
Model	***Description***
PS100	12 Ahr, rechargeable battery and regulator (requires primary source).
PS200	Smart 12 Ahr, rechargeable battery, and regulator (requires primary source).
PS24	24 Ahr, rechargeable battery, regulator, and enclosure (requires primary source).
PS84	84 Ahr, rechargeable battery, Sunsaver regulator, and enclosure (requires primary source).

G.9.2 Batteries List

Table 219. Batteries	
Model	***Description***
BPALK	D-cell, 12 Vdc alkaline battery pack
BP7	7 Ahr, sealed-rechargeable battery (requires regulator & primary source). Includes mounting bracket for Campbell Scientific enclosures.
BP12	12 Ahr, sealed-rechargeable battery (requires regulator & primary source). Includes mounting bracket for Campbell Scientific enclosures.
BP24	24 Ahr, sealed-rechargeable battery (requires regulator & primary source). Includes mounting bracket for Campbell Scientific enclosures.
BP84	84 Ahr, sealed-rechargeable battery (requires regulator & primary source). Includes mounting bracket for Campbell Scientific enclosures.

G.9.3 Regulators List

Table 220. Regulators	
Model	***Description***
CH100	12 Vdc charging regulator (requires primary source)
CH200	12 Vdc charging regulator (requires primary source)

G.9.4 Primary Power Sources List

Table 221. Primary Power Sources	
Model	***Description***
29796	24 Vdc 1.67 A output, 100 to 240 Vac 1 A input, 5 ft cable
SP5-L	5 watt solar panel (requires regulator)
SP10	10 watt solar panel (requires regulator)

SP10R	10 watt solar panel (includes regulator)
SP20	20 watt solar panel (requires regulator)
SP20R	20 watt solar panel (includes regulator)
SP50-L	50 watt solar panel (requires regulator)
SP90-L	90 watt solar panel (requires regulator)
DCDC18R	12 Vdc to 18 Vdc boost regulator (allows automotive supply voltages to recharge sealed, rechargeable batteries)

G.9.5 24 Vdc Power Supply Kits List

Table 222. 24 Vdc Power Supply Kits

Model	*Description*
28370	24 Vdc, 3.8 A NEC Class-2 (battery not included)
28371	24 Vdc, 10 A (battery not included)
28372	24 Vdc, 20 A (battery not included)

G.10 Enclosures — Products

Table 223. Enclosures — Products

Model	*Description*
ENC10/12	10 inch x 12 inch weather-tight enclosure (will not house CR3000)
ENC12/14	12 inch x 14 inch weather-tight enclosure. Pre-wired version available.
ENC14/16	14 inch x 16 inch weather-tight enclosure. Pre-wired version available.
ENC16/18	16 inch x 18 inch weather-tight enclosure. Pre-wired version available.
ENC24/30	24 inch x 30 inch weather-tight enclosure
ENC24/30S	Stainless steel 24 inch x 30 inch weather-tight enclosure

Table 224. Prewired Enclosures

Model	*Description*
PWENC12/14	Pre-wired 12 inch x 14 inch weather-tight enclosure.
PWENC14/16	Pre-wired 14 inch x 16 inch weather-tight enclosure.
PWENC16/18	Pre-wired 16 inch x 18 inch weather-tight enclosure.

G.11 Tripods, Towers, and Mounts Lists

Table 225. Tripods, Towers, and Mounts

Model	Description
CM106B	3 meter (10 ft) tripod tower, galvanized steel
CM110	3 meter (10 ft) tripod tower, stainless steel
CM115	4.5 meter (15 ft) tripod tower, stainless steel
CM120	6 meter (20 ft) tripod tower, stainless steel
UT10	3 meter (10 ft) free-standing tower, aluminum
UT20	6 meter (20 ft) free-standing tower, aluminum, guying is an option
UT30	10 meter (30 ft) free-standing tower, aluminum, guying is an option
CM375	10 meter (30 ft) mast, galvanized and stainless steel, requires guying.
CM300	0.58 meter (23 in) mast, stainless steel, free standing, tripod, and guyed options
CM305	1.2 meter (47 in) mast, stainless steel, free standing, tripod, and guyed options
CM310	1.42 meter (56 in) mast, stainless steel, free standing, tripod, and guyed options

G.12 Enclosures List

Table 226. Protection from Moisture — Products

Model	Description
6714	Desiccant 4 Unit Bag (Qty 20). Usually used in ENC enclosures to protect the CR800.
A150-L	Single Sensor Terminal Case, Vented w/Desiccant.
4091	Desiccant 0.75g Bag. Normally used with Sentek water content probes.
25366	CS450, CS451, CS455, and CS456 Replacement Desiccant Tube. Normally used with CS4xx sensors.
10525	Desiccant and Document Holder, User Installed. Normally use with ENC enclosures.
3885	Desiccant 1/2 Unit Bag (Qty 50).
CS210	Enclosure Humidity Sensor 11 Inch Cable.

Index

1

12 Volt Supply 103
12V Terminal 80, 103

5

5 Volt Pin 609
5 Volt Supply 102
50 Hz Rejection 98, 308
5V Terminal 80
5VoltLow 577

6

60 Hz Rejection 98, 308

7

7999 129

9

9 Pin Connectors 239, 609

A

Abbreviations 166
Ac 481
Ac Excitation 102, 323
Ac Noise Rejection 308
Ac Power 529
Ac Sine Wave 69, 334
Accuracy ..... 95, 319, 481, 507, See 50 Hz Rejection
Address 372, 373, 577
Address — Modbus 393
Address — PakBus 577
Address — SDI-12 262
Amperage 101
Amperes (Amps) 481
Analog 62, 481
Analog Control 349
Analog Input 65, 95
Analog Input Expansion 95, 348
Analog Input Range 95, 300
Analog Measurement 458
Analog Output 79, 95, 349, 526
Analog Sensor 345
Analog-to-Digital Conversion 297, 318, 319, 481
AND Operator 198, 539
Anemometer 70
ANSI 481, 613
API 90, 402
Argos 573
Arithmatic 159
Arithmetic Functions 542
Array 127, 133, 160, 496
Asynchronous Communication 78, 240
A-to-D 297, 318, 319, 481
Attributes 363
Autobaud 558
Automatic Calibration 315
Automatic Calibration Sequence 151
Automobile Power 100
AutoRange 300, 301

B

Background Calibration 151, 315, 318, 326, 577
Backup Battery 45, 93, 450
Battery Backup 45, 93
Battery Connection 47, 100
Baud 48, 109, 466, 558, 571
Baud Rate 240, 242, 556, 562, 573, 577
Beacon 375, 482, 577
Beginner Software 48, 50
Big Endian 240, 241, 619
Binary 482
Binary Control 349
Binary Format 137
Bit Shift 538
Bit Shift Operators 198, 537
Bitwise Comparison 198
Board Revision Number 577
BOOL8 ..... 128, 197, 198, 482
Bool8 Data Type 196, 198
Boolean 128, 160, 161, 459, 482

BOOLEAN Data Type 128, 482
Bridge 67, 319, 321
Bridge — Quarter-Bridge Shunt 219
Bridge Measurement 102, 323, 525
Buffer Depth 577
Buffer Size 242
Burst Mode 221
Byte Translation 245

C

Cable Length 309, 345
CAL Files 204
Calibration 73, 92, 151, 205, 315, 326
Calibration — Background 577
Calibration — Error 577
Calibration — Field 203
Calibration — Field - Example 207
Calibration — Field - Offset 209
Calibration — Field - Slope / Offset 211
Calibration -- Field - Two-Point 206
Calibration — Field - Zero 207
Calibration — Field Calibration Slope Only 214
Calibration — Functions 572
Calibration — Manual Field Calibration .. 205
Calibration — Single-Point Field Calibration 206
Callback 283, 371, 483, 491, 571
CAO 349
Card Bytes Free 577
Card Status 577
Care 92, 449
CE Compliance 95
Charging Circuit 473, 474
Circuit 321, 342, 351
Clients 631
CLK/HS Pin 609
Clock 75
Clock Accuracy 95
Clock Function 552
Clock Synchronization 55
Closed Interval 143
Code 483
Coil 392
Collecting Data 55, 57
COM Port Connection 47
Commands - SDI-12 261
Comment 124
Common Mode 297, 300, 301
Common Mode Null 300, 301
Communication 47, 55, 89, 370, 387, 466, 467
communication Ports 577
Communications Memory Errors 467, 577
Communications Memory Free 467, 577
CompactFlash 365
Compile Errors 457, 462, 464
Compile Program 178
Compile Results 577
Compression 115, 440
Concatenation 276
Conditional Compile 178, 179
Conditioning Circuit 342
Configuration 109
Configure Display 440
Connection 43, 47, 75
Constant 127, 135, 136, 484
Constant -- Predefined 136
Constant Conversion 161
Constant Declaration 513
Continuous Analog Out 349
Control 79, 103, 349, 519, 522
Control I/O 95, 484
Control Instructions 497
Control Output Expansion 349
Control Peripheral 348
Control Port 78, 577
Conversion 161
CPU 355, 484
CPU Drive Free 577
cr 241
CR1000KD 75, 84, 180, 430, 484, 627
CR10X 143, 251, 558
CR200 558
CR23X 251, 558
CR510 ..... 251, 558
CRBasic Editor 123
CRBasic Program 48, 55, 124
CS I/O Port 81, 485, 609
Current 101

Current Loop Sensor....66, 79, 319
Current Sourcing Limit....103, 349
Custom Display....433
Custom Menu....83, 84, 555
CVI....485
CWB100....532

D

Data Acquisition System — Sensor....42
Data bits....241
Data Collection....55, 57
Data Destination....515
Data Fill Days....577
Data Format....89, 617
Data Monitoring....48, 55
Data Point....485
Data Preservation....364
Data Record Size....577
Data Recovery....478
Data Retrieval....87, 370
Data Storage....86, 142, 351, 515, 516
Data Storage — Trigger....194
Data Table....48, 138, 139, 140, 165, 195, 435, 514
Data Table Access....565
Data Table Header....163
Data Table Management....565
Data Table Modifier....514
Data Table Name....127, 577
Data Type....128, 129, 160, 198
Data Type — Bool8....196
Data Type — LONG....493
Data Type — NSEC....200, 495
Data type — UINT2....505
Data Type Format....242
Datalogger Support Software....93, 485
Date....439
dc....486
dc Excitation....102
DCE....81, 486, 487, 495
Debugging....461
Declaration....127, 138, 511
Declaration — Data Table....514
Declaration — Modbus....392
Default.CR1....114
Desiccant....92, 97, 486
DevConfig....109, 110, 487
Device Configuration....109, 110
Device Map....377
DHCP....288, 487
Diagnosis — Power Supply....470
Diagnostics....524
Dial Sequence....149
Dial String....577
Differential....64, 65, 487
Digital I/O....62, 78, 95, 349, 527
Digital Register....392
Dimension....132, 487
Diode OR Circuit....100
Disable Variable....143, 144, 193, 458
DisableVar....193, 458
Display....82, 430
Display — Custom....433
DNP Variable....388
DNP3....90, 387, 571
DNS....288, 487
Documentation....124
Drive USR....577
DTE....81, 486, 487, 495
Duplex....241
Durable Setting....113

E

Earth Ground....79, 103, 488
Edge Timing....62, 78
Edit File....437
Edit Program....437
Editor....50
Editor -- Short Cut....123
Email....282, 567
EMF....303
Enclosures....90, 97
Encryption....90, 385
Endianness....240, 241, 619
Engineering Units....488
Environmental Enclosures....97
Erase Memory....577
Error....303, 311, 458, 459, 467
Error — Analog Measurement....106, 107, 458

Error — Programming 457
Error — Soil Temperature Thermocouple 107
ESD 79, 488, 507
ESD Protection 103, 105
ESS 488
Ethernet Settings 577
Evapotranspiration 518
Example 163, 367, 368, 379
Example Program 194, 247, 252
Excitation 102, 488, 526
Excitation Reversal 317
Execution 149
Execution at Compile 518
Execution Interval 152, 153
Execution Time 488
Expression 158, 160, 161, 163, 488
Expression — Logical 162
Expression — String 164
Extended Commands — SDI-12 271
External Power Supply 80

F

False 163
FAT 354
Field Calibration 73, 203
FieldCal — Multiplier 212
FieldCal — Multiplier Only 215
FieldCal — Offset 210, 212
FieldCal — Zero 208
File Attributes 363
File Compression 115, 440
File Control 361, 488
File Display 437
File Management 361, 563
File Names 368
Files Manager 577
Fill and Stop Memory 351, 489
Final-Data Memory 489
Final-Memory Tables 435
Firmware 85
Fixed Voltage Range 301
Flag 133, 393
Floating Point 159
Format — Numerical 137
Forward 33
Fragmentation 354
Frequency 69, 331
Frequency Resolution 335
FTP 490
FTP Client 287
FTP Server 287
FTP Settings 577
Full Duplex 490
Full-Bridge 319
Full-Memory Reset 577
Function Codes — Modbus 393

G

Garbage 490
Gas-discharge Tubes 103
Generator 50, 123
global variable 490
Glossary 481
GOES 574
Graphs 433
Ground 79, 92, 103, 105, 301, 490
Ground Loop 107
Ground Potential Error 107
Ground Reference Offset 318
Gypsum Block 323
Gzip Compression 115

H

Half Bridge 319
Half Duplex 490, 491
Handshake, Handshaking 491
Hello Exchange 491
Hello Message 375
Hello Request 375
Hertz 491
Hexadecimal 137
Hidden Files 90
Holding Register 392
HTML 286, 491
HTTP 283, 491
HTTP Settings 577
Humidity 92, 97

I

I/O Port 78
IEEE4 ..... 128, 491
Include File 145, 577
INF 458, 491
Infinite 458
Information Services 282, 567

Initialize 127
Initiate Telecommunications..... 283, 371, 491, 571
INMARSAT-C 575
Input Channel 65
Input Expansion Module..... 84
Input Limits 95, 297, 301
Input Range..... 95, 300
Input Register 392
Input Reversal 317
Input/Output Instructions 491
Installation 43
Instruction..... 156
Instruction Times 524
Instructions — ABS 542
Instructions — AcceptDataRecords 558
Instructions — ACOS 540
Instructions — ACPower 529
Instructions — AddPrecise..... 546
Instructions — Alias 121, 127, 136, 157, 512
Instructions — AM25T..... 532
Instructions — AND..... 539
Instructions — AngleDegrees 511
Instructions — ArgosData 573
Instructions — ArgosDataRepeat 573
Instructions — ArgosError..... 573
Instructions — ArgosSetup 573
Instructions — ArgosTransmit..... 573
Instructions — ArrayIndex..... 562
Instructions — ArrayLength..... 562
Instructions — As 512
Instructions — ASCII 481, 549, 613
Instructions — ASIN 540
Instructions — ATN 540
Instructions — ATN2 540
Instructions — Average..... 516
Instructions — AvgRun 546
Instructions — AvgSpa..... 545
Instructions — AVW200 532
Instructions — Battery..... 44, 85, 98, 99, 274, 450, 470, 524, 577
Instructions — BeginProg / EndProg 519
Instructions — BrFull..... 525
Instructions — BrFull6W 525
Instructions — BrHalf 525
Instructions — BrHalf3W..... 525
Instructions — BrHalf4W..... 525
Instructions — Broadcast..... 375, 559
Instructions — CalFile 563
Instructions — Calibrate 572, 576
Instructions — Call 519
Instructions — CallTable 519
Instructions — Case 519
Instructions — CDM_VW300Config..... 532
Instructions — CDM_VW300Dynamic 532
Instructions — CDM_VW300Rainflow 532
Instructions — CDM_VW300Static 532
Instructions — Ceiling 542
Instructions — CheckPort..... 527
Instructions — CheckSum..... 549
Instructions — CHR..... 549
Instructions — ClockChange..... 552
Instructions — ClockReport..... 552, 559
Instructions — ClockSet 552
Instructions — ComPortIsActive 524
Instructions — Const 136, 513
Instructions — ConstTable / EndConstTable 513
Instructions — COS..... 540
Instructions — COSH 540
Instructions — Covariance 516
Instructions — CovSpa..... 545
Instructions — CPISpeed 532
Instructions — CS110 529
Instructions — CS110Shutter..... 529
Instructions — CS616 529
Instructions — CS7500 529
Instructions — CSAT3..... 529
Instructions — CWB100 532
Instructions — CWB100Diagnostics 532
Instructions — CWB100Routes 532
Instructions — CWB100RSSI 532
Instructions — Data / Read / Restore 522
Instructions — DataEvent..... 514
Instructions — DataGram..... 559
Instructions — DataInterval..... 142, 514
Instructions — DataLong / Read / Restore 522
Instructions — DataTable / EndTable 141, 514
Instructions — DataTime..... 514
Instructions — DaylightSaving 552
Instructions — DaylightSavingUS 552
Instructions — Delay 519
Instructions — DewPoint..... 544
Instructions — DHCPRenew..... 567
Instructions — DialModem 571
Instructions — DialSequence / EndDialSequence559
Instructions — DialVoice 554
Instructions — Dim 487, 512
Instructions — DisplayLine..... 555
Instructions — DisplayMenu / EndMenu . 555
Instructions — DisplayValue 555
Instructions — DNP 388, 571
Instructions — DNPUpdate 388, 571

Instructions — DNPVariable 571
Instructions — Do / While / Until / Exit Do / Loop. 519
Instructions — EC100 529
Instructions — EC100Configure.....529
Instructions — EMailRecv 567
Instructions — EMailSend.....567
Instructions — EndSequence.....519
Instructions — EQV.....539
Instructions — Erase.....562
Instructions — ESSInitialize.....518
Instructions — ESSVariables.....512
Instructions — EthernetPower 567
Instructions — ETsz 518
Instructions — ExciteV 526
Instructions — Exit 519
Instructions — EXP 542
Instructions — FFT.....516
Instructions — FFTSpa 545
Instructions — FieldCal 207, 572
Instructions — FieldCalStrain.....216, 218, 572
Instructions — FieldNames.....516
Instructions — FileClose 563
Instructions — FileCopy 563
Instructions — FileEncrypt 563
Instructions — FileList.....563
Instructions — FileManage 563
Instructions — FileMark 565
Instructions — FileOpen.....563
Instructions — FileRead.....563
Instructions — FileReadLine.....563
Instructions — FileRename.....563
Instructions — FileSize 563
Instructions — FileTime 563
Instructions — FileWrite 563
Instructions — FillStop 514
Instructions — FindSpa.....562
Instructions — FIX.....542
Instructions — FLOAT.....128, 160, 161, 459, 489
Instructions — Floor 542
Instructions — For / To / Step / ExitFor / Next 519
Instructions — FormatFloat.....549
Instructions — FormatLong.....549
Instructions — FormatLongLong.....549
Instructions — FP2.....128, 489, 617
Instructions — FRAC 542
Instructions — FTPClient 567
Instructions — Function / Return / Exit Function / EndFunctio n 576
Instructions — GetDataRecord 559
Instructions — GetFile.....559
Instructions — GetRecord.....565
Instructions — GetVariables.....559
Instructions — GOESData 574
Instructions — GOESGPS 574
Instructions — GOESSetup.....574
Instructions — GOESStatus.....574
Instructions — GPS.....529
Instructions — HEX 549
Instructions — HexToDec 549
Instructions — Histogram.....547
Instructions — Histogram4D 547
Instructions — HTTPGet 567
Instructions — HTTPOut 567
Instructions — HTTPPost.....567
Instructions — HTTPPut.....567
Instructions — HydraProbe 529
Instructions — If / Then / Else / ElseIf / EndIf..... 519
Instructions — IfTime 552
Instructions — IIF 539
Instructions — IMP 539
Instructions — Include.....563
Instructions — INSATData 575
Instructions — INSATSetup 575
Instructions — INSATStatus.....575
Instructions — InStr.....549
Instructions — InstructionTimes.....524
Instructions — INT.....542
Instructions — INTDV.....542
Instructions — IPInfo 567
Instructions — IPNetPower 567
Instructions — IPRoute 567
Instructions — IPTrace.....567
Instructions — Is.....567
Instructions — Left 549
Instructions — Len 549
Instructions — LevelCrossing.....547
Instructions — LI7200 529
Instructions — LI7700 529
Instructions — LN or LOG.....542
Instructions — LoadFieldCal 572
Instructions — LOG10.....542
Instructions — LONG 128, 160, 161, 459, 493
Instructions — LowerCase 549
Instructions — LTrim 549
Instructions — Maximum.....516
Instructions — MaxSpa 545
Instructions — Median.....516
Instructions — MenuItem 555
Instructions — MenuPick.....555

Instructions — MenuRecompile 555
Instructions — Mid 549
Instructions — Minimum.....516
Instructions — MinSpa.....545
Instructions — MOD.....542
Instructions — ModBusMaster.....393, 571
Instructions — ModBusSlave.....393, 571
Instructions — ModemCallback 571
Instructions — ModemHangup / EndModemHangup 571
Instructions — Moment.....516
Instructions — Move 562
Instructions — MoveBytes 393, 556
Instructions — MovePrecise 518
Instructions — MuxSelect 532
Instructions — Network.....559
Instructions — NetworkTimeProtocol.....567
Instructions — NewFieldCal.....572
Instructions — NewFieldNames.....512
Instructions — NewFile 563
Instructions — NOT.....539
Instructions — OmniSatData.....575
Instructions — OmniSatRandomSetup...575
Instructions — OmniSatStatus.....575
Instructions — OmniSatSTSetup 575
Instructions — OpenInterval.....143, 514
Instructions — Optional.....576
Instructions — OR.....539
Instructions — PakBusClock.....552, 559
Instructions — PanelTemp.....524
Instructions — PeakValley 516
Instructions — PeriodAvg.....527
Instructions — PingIP.....567
Instructions — PipelineMode 511
Instructions — PortGet.....527
Instructions — PortPairConfig.....527
Instructions — PortsConfig 527
Instructions — PortSet 527
Instructions — PPPClose.....567
Instructions — PPPOpen 567
Instructions — PreserveVariables.....512
Instructions — PRT 227, 544
Instructions — PRTCalc.....544
Instructions — Public 498, 512
Instructions — PulseCount.....527
Instructions — PulseCountReset 518
Instructions — PulsePort.....527
Instructions — PWR.....542
Instructions — RainFlow 547
Instructions — RainFlowSample.....518, 547
Instructions — Randomize 546
Instructions — Read.....522
Instructions — ReadIO.....527
Instructions — ReadOnly 127, 512
Instructions — RealTime.....524, 552
Instructions — RectPolar.....542
Instructions — Replace 549
Instructions — ResetTable.....565
Instructions — Resistance.....319
Instructions — Restore.....522
Instructions — Right.....549
Instructions — RMSSpa.....545
Instructions — RND.....546
Instructions — Round.....542
Instructions — Route.....559
Instructions — RoutersNeighbors 559
Instructions — Routes.....559, 577
Instructions — RTrim.....549
Instructions — RunProgram.....563
Instructions — Sample 516
Instructions — SampleFieldCal.....516, 572
Instructions — SampleMaxMin 516
Instructions — SatVP 544
Instructions — Scan / ExitScan / ContinueScan / NextScan 519
Instructions — SDI12Recorder 270, 529
Instructions — SDI12SensorResponse 269, 529
Instructions — SDI12SensorSetup 269, 529
Instructions — SDMAO4 532
Instructions — SDMAO4A.....532
Instructions — SDMCAN.....532
Instructions — SDMCD16AC 532
Instructions — SDMCD16Mask 532
Instructions — SDMCVO4.....532
Instructions — SDMGeneric.....532
Instructions — SDMINT8.....532
Instructions — SDMIO16.....532
Instructions — SDMSIO4 532
Instructions — SDMSpeed.....532
Instructions — SDMSW8A 532
Instructions — SDMTrigger.....532
Instructions — SDMX50.....532
Instructions — SecsSince1990 552
Instructions — Select Case / Case / Case Is / Case Else / EndSelect 519
Instructions — SemaphoreGet.....151, 522
Instructions — SemaphoreRelease 522
Instructions — SendData 559
Instructions — SendFile 559
Instructions — SendGetVariables.....559
Instructions — SendTableDef 559
Instructions — SendVariables.....559
Instructions — SequentialMode 511
Instructions — SerialBrk.....556
Instructions — SerialClose.....242, 556

Instructions — SerialFlush 242, 556
Instructions — SerialIn 242, 556
Instructions — SerialInBlock 242, 556
Instructions — SerialInChk.....556
Instructions — SerialInRecord 242, 556
Instructions — SerialOpen 242, 556
Instructions — SerialOut 242, 556
Instructions — SerialOutBlock 242, 556
Instructions — SetSecurity.....511
Instructions — SetSetting.....565
Instructions — SetStatus.....565
Instructions — SGN 542
Instructions — ShutDownBegin 522
Instructions — ShutDownEnd 522
Instructions — Signatures.....90, 501, 524
Instructions — SIN 540
Instructions — SINH.....540
Instructions — SlowSequence 153, 502, 519, 577
Instructions — SNMPVariable.....567
Instructions — SolarPosition.....544
Instructions — SortSpa 545
Instructions — SplitStr.....549
Instructions — SPrintF 549
Instructions — Sqr.....542
Instructions — StaticRoute.....559
Instructions — StationName 127, 511, 577
Instructions — StdDev 516
Instructions — StdDevSpa.....545
Instructions — StrainCalc.....544
Instructions — StrComp 549
Instructions — STRING.....128, 459, 503
Instructions — Sub / Exit Sub / End Sub 511
Instructions — SubMenu / EndSubMenu 555
Instructions — SubScan / NextSubScan 154, 519
Instructions — SW12 526
Instructions — TableHide.....143, 514
Instructions — TableName.EventCount..565
Instructions — TableName.FieldName ...565
Instructions — TableName.Output.....565
Instructions — TableName.Record.....565
Instructions — TableName.TableFull.....565
Instructions — TableName.TableSize 565
Instructions — TableName.TimeStamp ..565
Instructions — TAN 540
Instructions — TANH 540
Instructions — TCDiff 525
Instructions — TCPClose.....567
Instructions — TCPOpen 567
Instructions — TCSe 525
Instructions — TDR100 532
Instructions — TGA 529
Instructions — Therm107 529
Instructions — Therm108 529
Instructions — Therm109 529
Instructions — Thermistor 525
Instructions — TimedControl.....532
Instructions — TimeIntoInterval.....552
Instructions — TimeIsBetween.....519, 552
Instructions — Timer 552
Instructions — TimerIO 527
Instructions — TimeUntilTransmit 559
Instructions — Totalize.....516
Instructions — TotalRun.....537
Instructions — TriggerSequence.....519
Instructions — Trim 549
Instructions — UDPDataGram 567
Instructions — UDPOpen 567
Instructions — Units 127, 136, 512
Instructions — UpperCase 549
Instructions — VaporPressure 544
Instructions — VibratingWire.....527
Instructions — VoiceBeg / EndVoice 554
Instructions — VoiceHangup.....554
Instructions — VoiceKey 554
Instructions — VoiceNumber.....554
Instructions — VoicePhrases 554
Instructions — VoiceSetup 554
Instructions — VoiceSpeak 554
Instructions — VoltDiff.....525
Instructions — VoltSE 525
Instructions — WaitDigTrig.....519
Instructions — WaitTriggerSequence 519
Instructions — WebPageBegin / WebPageEnd ... 567
Instructions — WetDryBulb 544
Instructions — While / Wend 519
Instructions — WindVector.....518
Instructions — WorstCase.....565
Instructions — WriteIO 527
Instructions — XMLParse.....567
Instructions — XOR.....539
Instrumentation Amplifier.....297
Integer 161, 492
Integrated Processing 544
Integration.....307
Intermediate Memory 143
Intermediate Storage.....486
Internal Battery 45, 93, 450
Interrupt 78
Interval.....486
Introduction.....33
Inverse Format Registers - Modbus.....394

Ionic Sensor 107
IP 282, 288, 492, 577
IP - Modbus 394
IP Address 492, 577
IP Gateway 577
IP Information 577

K

Keyboard Display 82, 84, 180, 430, 555

L

LAN — PakBus 379
Lapse 142
Lead 309
Lead Length 345
Leaf Node 372, 373
If 241
Lightning 43, 92, 103, 488
Lightning Protection 105
Lightning Rod 105
Line Continuation 126
Linear Sensor 73
Link Performance 377
Lithium Battery 45, 450, 577
Little Endian 240, 241, 619
Local Variable 134, 493
Lock 90
LoggerNet 631
Logic 163
Logical Expression 162, 163
Logical Operator 539
Long Lead 309
Loop 493
Loop Counter 493
Low 12-V Counter 577
Low-Level Ac 334, 348
LSB 240, 241, 619

M

Maintenance 92, 449
Manage Files 577
Manual Organization 33
Manually Initiated 493
Marks and Spaces 241
Mass Storage Device 114, 356, 365, 493, 629
Math 159, 458, 537
Mathematical Operation 159
Mathematical Operator 537
MD5 digest 493
ME Pin 609
MeasOff 315
Measurement 295
Measurement — Error 311
Measurement — Instruction 156, 524
Measurement — Op Codes 577
Measurement — Peripheral 348
Measurement — Sequence 299
Measurement — Synchronizing 346
Measurement — Time 577
Measurement — Timing 299
Memory 86, 160, 351
Memory — Free 577
Memory — Size 577
Memory Conservation 124, 142, 160, 246
Memory Reset 360
Menu — Custom 180, 555
Messages 577
Milli 493
Millivoltage Measurement 297
Modbus 89, 288, 391, 393, 493, 571
Modem Control 571
Modem Hangup Sequence 149
Modem/Terminal 494
Moisture 92, 97
Monitoring Data 48, 55
Mounting 43, 97
MSB 240, 241, 619
Multi-meter 494
Multiple Lines 126
Multiple Statements 126
Multiplexers 348
mV 494

N

Name 158, 577
NAN 128, 193, 301, 458, 494
Neighbor 374, 577

Neighbor Device....494
Neighbor Filter....375
Network....373
Network Planner....110
Nine-Pin Connectors....239, 609
NIST....494
Node....372, 494, 577
Noise....98, 303, 307, 308, 309
Nominal Power....85
Not-A-Number....458
NSEC Data Type....128, 200, 495
NULL Character....257
Null Modem....486, 487, 495
Numbers of Records....145
Numerical Format....137

O

Ohm....495
Ohms Law....495
OID....301
OMNISAT....575
On-line Data Transfer....495
Op Codes....577
Open Input Detect....301, 313
Open Inputs....301
Operating System....577
Operating Temperature Range....97
Operator....537, 539
Operators — Bit Shift....537
OR Diode Circuit....100
OR Operator....198
OS Date....577
OS Signature....577
OS Version....577
Output....495
Output Array....496
OutputOpt....289
Overrange....231, 458, 494
Overrun....461, 577
Overview....75
Overview — Power Supply....470

P

Packet Size....577
PakBus....88, 373, 377, 496, 558
PakBus Address....372, 373, 577
PakBus Information....577
PakBus LAN....379
PakBus Overview....372
Panel Temperature....577
Parameter....496
Parameter Type....157
Password....90, 577
PC Program....467
PC Support Software....93
PC200W....48, 630
PC400....631
PCM....301
PDA Support....631
PDM....79, 349
Period Average....62, 95, 341, 342, 496, 527
Peripheral....348, 496
Peripheral Port....81
Piezometer....42
Pin Out....609
Ping....288, 377, 497, 577
Pipeline Mode....103, 150, 151
Platinum Resistance Thermometer....227, 544
PLC....392
Poisson Ratio....497
Polar Sensor....107
Polarity....47
Polarity Reversal....317
Polarized Sensor....323
Port....78, 438
Power....48, 80, 95, 100, 101, 103
Power Budget....99, 274
Power Consumption....99
Powering Sensor....85, 101
Power-up....365
PPP....282, 567
PPP — Dial Response....577
PPP — Settings....577
PPP — Username....577
PPP Information....577
PPP Interface....577
PPP IP Address....492, 577
PPP Password....577
Precision....497, 507
Predefined Constant....136

Preserve Data 125, 364
Preserve Settings 577
Pressure Transducer 313
Primer 41
Print Device 497
Print Peripheral 497
Priority 114, 149, 154
Probe 42, 626
Process Time 577
Processing 537
Processing — Integrated 544
Processing — Output 143, 516
Processing — Spatial 545
Processing — Wind Vector 289
Processing Instructions 497
Processing Instructions — Output 486
Processor 95
Program 85
Program — Alias 136
Program — Array 133
Program — Compile Errors 457, 462, 464
Program — Constant 135
Program — Data Storage Processing Instruction 156
Program — Data Table 138
Program — Data Type 128
Program — DataInterval() Instruction 142
Program — DataTable() Instruction 141
Program — Declaration 127, 138, 511
Program — Dimension 132
Program — Documenting 124
Program — Execution 149
Program — Expression 158
Program — Field Calibration 204
Program — Floating Point Arithmetic 159
Program — Mathematical Operation 159
Program — Measurement Instruction 156
Program — Modbus 392
Program — Name in Parameter 157
Program — Output Processing 143
Program — Overrun 461, 577
Program — Parameter Type 157
Program — Pipeline Mode 150
Program — Resource Library 203
Program — Runtime Errors 457, 462, 464
Program — Scan 153
Program — Scan Priority 154
Program — Sequential Mode 151
Program — Slow Sequence 153
Program — Structure 121
Program — Subroutine 145, 281
Program — SubScan 154
Program — Task Priority 149
Program — Timing 152
Program — Unit 136
Program — Variable 127
Program Editor 50
Program Errors 462, 464, 577
Program Signature 577
Programming 48, 55, 85, 124
Programming — Capturing Events 167
Programming — Conditional Output 168
Programming — Groundwater Pump Test 169
Programming — Multiple Scans 177
Programming — Running Average 190
Programming — Scaling Array 175
Protection 92
Protocols Supported 95
Pulse 62, 498
Pulse Count 95, 331
Pulse Count Reset 175
Pulse Input 69, 70
Pulse Input Expansion 348
Pulse Measurement 527
Pulse Sensor 345
Pulse-Duration Modulation 79, 349
Pulse-Width Modulation 79, 349
PWM 79, 349

Q

Quarter-Bridge 216, 319
Quarter-Bridge Shunt 219
Quarter-Bridge Zero 220
Quickstart Tutorial 41

R

Rain Gage 345
Range Limit 128
Ratiometric 323
RC Resistor Shunt 218
Record Number 577
Reference Voltage 106
Regulator 498
Relay 350, 351
Relay Driver 103, 350
Reliable Power 98
Requirement — Power 99
Reset 360, 577
Resistance 499
Resistive Bridge 95, 319
Resistor 499

Resolution 95
Resolution — Concept 507
Resolution — Data Type 128, 499, 507
Resolution — Definition 128, 499, 507
Resolution — Edge Timing 62
Resolution — Period Average 62
Retrieving Data 55, 57
RevDiff 315
Reverse Polarity 47, 100
RevEx 315
Ring Line (Pin 3) 499
Ring Memory 351, 499
RING Pin 609
Ringing 499
RMS 499
Route Filter 577
Router 372, 373, 577
RS-232 ..... 48, 62, 73, 95, 241, 466, 499, 577
RS-232 Pin Out 609
RS-232 Port 81
RS-232 Power States 610
RS-232 Recording 344
RS-232 Sensor 238, 346
RTDAQ 631
RTU 392
Running Average 190
Runtime Errors 457, 462, 464
Runtime Signatures 577
RX 241
RX Pin 609

S

Sample Rate 500
Satellite 573
SCADA 89, 90, 387, 571
Scan 95, 153
Scan (execution interval) 95, 500
Scan Interval 95, 152
Scan Time 153, 500
Scientific Notation 137
SDE Pin 609
SDI-12 ..... 95, 259, 263, 500, 529
SDI-12 Command 262
SDI-12 Extended Command 271
SDI-12 Measurement 458
SDI-12 Recording 344
SDI-12 Sensor 346
SDM 62, 78, 500
Security 90, 577
Seebeck Effect 500
Self-Calibration 326
Semaphore 501
Send 501
Sensor 42, 85, 626
Sensor — Analog 297
Sensor — Bridge 319
Sensor — Voltage 297
Sensor Power 85, 101
Sensor Support 295
Sequence 138
Sequence — Dial 149
Sequence — Incidental 149
Sequence — Modem Hangup 149
Sequence — Shut Down 149
Sequence — Web Page 149
Sequential Mode 103, 151
Serial 62, 501
Serial — Comms Sniffer Mode 475
Serial — I/O 238, 346, 556
Serial — Input 238
Serial — Input Expansion 348
Serial — Number 577
Serial — Port 239, 609
Serial — Port Connection 47
Serial — Sensor 346
Serial — Server 288
Serial — Talk Through Mode 475
Server 631
Set Time and Date 439
Setting 439
Setting — PakBus 440
Setting — Via CRBasic 113
Settings — Resident Files 113
Settling Error 311
Settling Time 307, 309, 310, 311, 312, 313, 345
Short Cut 50, 630
Shunt Calibration 219, 220
Shunt Zero 220
Shut Down Sequence 149
SI Système Internationale 501
Signal Conditioner 107

Signal Settling Time 309, 311
Signatured Packet 88
Signatures — Program 176, 577
Signatures — Runtime 577
Signatures — System 167
Sine Wave 334
Single-Ended Measurement 64, 65, 106, 107, 501
Skipped Records 577
Skipped Scan 142, 461, 502, 577
Skipped Slow Scan 577
Skipped System Scan 577
SMTP 288, 502
SNMP 287
SNP 502
Software 93
Software — Beginner 48, 50
Solar Panel 471
SP 241
Spark Gap 103
Spatial Processing 545
Specifications 95
Square Wave 69
SRAM 351, 355
Standard Deviation 293
Star 4 (*4) Parameter Entry Table 497
Start Bit 242
Start Time 577
Start Up Code 577
Starter Software 48, 50
State 79, 502, 610
State Measurement 78
Statement Aggregation 126
Status 438
Status Table 578
Stop bits 242
Storage 515
Storage Media 351
Strain 324
Strain Calculation 324
String Command 549
String Expression 164
String Function 548
String Operation 275, 548
Structure — Program 121
Subroutine 145, 281
SubScan 154
Supply 44, 85, 98, 99, 274, 470
Support Software 503
Surge Protection 99, 103, 105
SW-12 Port 79, 95, 103, 526, 577
Switched 12 Vdc (SW12) Port 79, 95, 103, 526, 577
Synchronous 504
System Time 153, 504
Système Internationale 501

T

Table 48
Table — Data Header 163
Table Overrun 461
Task 150, 504
Task Priority 149
TCP 282, 288, 567
TCP Information 577
TCP Port 577
TCP Settings 577
TCP/IP 283, 504
TCP/IP Information 577
Telecommunication 48, 55, 88, 89, 370, 387
Telnet 287, 504
Telnet Settings 577
Temperature Range 97
Terminal Emulator 475
Terminal Emulator Menu 476
Terminal Input Module 349
Termination Character 257
Thermistor 227, 297, 504, 529
Thermocouple 46
Thermocouple Measurement 107, 525
Throughput 505
Time 200, 439
Time Skew 266, 318, 500
Time Zone 200
Timestamp 142, 200, 577
Timing 299
TIMs 349
Toggle 505
Transducer 42, 313
Transformer 85, 473
Transient 79, 92, 99, 461, 488, 507
Transparent Mode — SDI-12 475

Tree Map 378
Trigger — Output 193
Trigger Variable 193
Triggers 193
Trigonometric Functions 541
TrigVar 193, 194
Troubleshooting 455, 577
Troubleshooting — PakBus Network 376
Troubleshooting — Power Supply 470
Troubleshooting — SDI-12 260
Troubleshooting — Solar Panel 471
True 163
TTL 505
TTL logic 505
TTL Recording 344
Tutorial 41
Tutorial Exercise 46
TVS 99
TX 242
TX Pin 609

U

UDP 567
UINT2 ..... 128, 505
UPS 44, 85, 98, 505
USB: Drive 114, 356, 365, 493, 629
User Defined Functions 576
User Program 124, 507
USR 355
USR Drive 577
USR Drive Free 577
UTC Offset 577

V

Vac 506
Variable 127, 160, 506
Variable Array 134
Variable Declaration 512
Variable Initialization 135
Variable Management 562
Variable Modifier 512
Variable Out of Bounds 577
Vdc 506
Vector 291, 292
Vehicle Power Connection 100
Verify Interval 577
Vibrating Wire Input Module 349
Viewing Data 48, 55
Visual Weather 631
Voice Modem 554
Volt Meter 506
Voltage Measurement 297, 525
Volts 506

W

Warning Message 462
Watchdog Errors 165, 353, 461, 464, 467, 507, 577, 578
Watchdog Timer 507
Water Conductivity 323
Weather Tight 92, 507
Web API 90, 402
Web Page 567
Web Page Sequence 149
Web Server 283
Wheatstone Bridge 319
Wind Vector 289, 291, 292
Wind Vector Processing 289
Wireless Sensor Network 532
Wiring 43, 47, 75, 345
Wiring Panel 43, 44, 47, 75
Writing Program 123

X

XML 507
XOR 539

Z

Zero 220
Zero Basis 203

Campbell Scientific Companies

Campbell Scientific, Inc. (CSI)
815 West 1800 North
Logan, Utah 84321
UNITED STATES
www.campbellsci.com • info@campbellsci.com

Campbell Scientific Africa Pty. Ltd. (CSAf)
PO Box 2450
Somerset West 7129
SOUTH AFRICA
www.csafrica.co.za • cleroux@csafrica.co.za

Campbell Scientific Australia Pty. Ltd. (CSA)
PO Box 8108
Garbutt Post Shop QLD 4814
AUSTRALIA
www.campbellsci.com.au • info@campbellsci.com.au

Campbell Scientific (Beijing) Co., Ltd.
8B16, Floor 8 Tower B, Hanwei Plaza
7 Guanghua Road
Chaoyang, Beijing 100004
P.R. CHINA
www.campbellsci.com • info@campbellsci.com.cn

Campbell Scientific do Brasil Ltda. (CSB)
Rua Apinagés, nbr. 2018 — Perdizes
CEP: 01258-00 — São Paulo — SP
BRASIL
www.campbellsci.com.br • vendas@campbellsci.com.br

Campbell Scientific Canada Corp. (CSC)
14532 – 131 Avenue NW
Edmonton AB T5L 4X4
CANADA
www.campbellsci.ca • dataloggers@campbellsci.ca

Campbell Scientific Centro Caribe S.A. (CSCC)
300 N Cementerio, Edificio Breller
Santo Domingo, Heredia 40305
COSTA RICA
www.campbellsci.cc • info@campbellsci.cc

Campbell Scientific Ltd. (CSL)
Campbell Park
80 Hathern Road
Shepshed, Loughborough LE12 9GX
UNITED KINGDOM
www.campbellsci.co.uk • sales@campbellsci.co.uk

Campbell Scientific Ltd. (CSL France)
3 Avenue de la Division Leclerc
92160 ANTONY
FRANCE
www.campbellsci.fr • info@campbellsci.fr

Campbell Scientific Ltd. (CSL Germany)
Fahrenheitstraße 13
28359 Bremen
GERMANY
www.campbellsci.de • info@campbellsci.de

Campbell Scientific Spain, S. L. (CSL Spain)
Avda. Pompeu Fabra 7-9, local 1
08024 Barcelona
SPAIN
www.campbellsci.es • info@campbellsci.es

Please visit www.campbellsci.com to obtain contact information for your local US or international representative.